TV Stand

Assembly Instructions - Please keep for future reference

⚠ NOTE:

Comes with TWO PACKAGES with TWO TRACKINGS,may NOT be delivered at the same time.

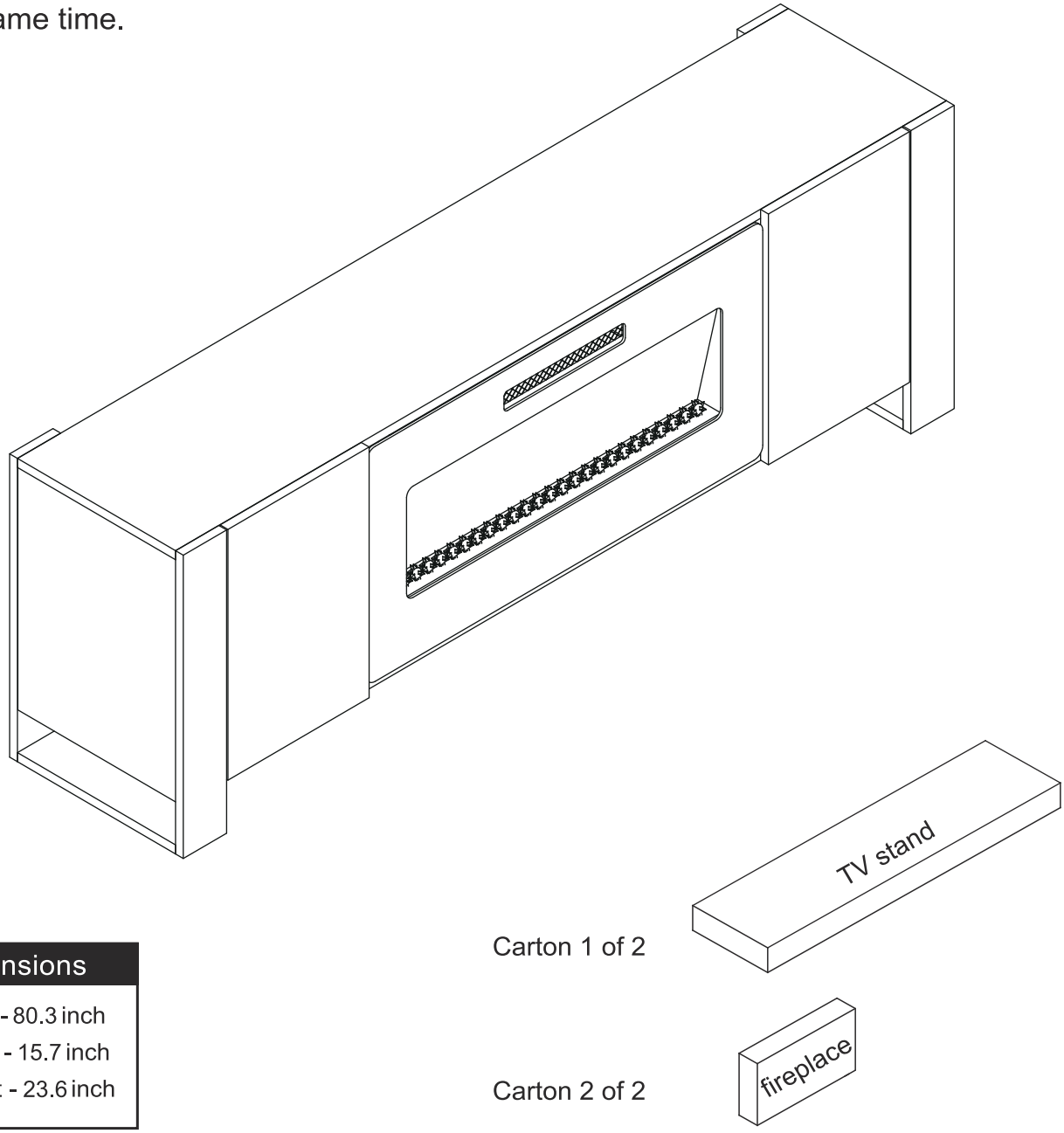

Carton 1 of 2

Carton 2 of 2

Dimensions

Width - 80.3 inch
Depth - 15.7 inch
Height - 23.6 inch

Important – Please read these instructions fully before starting assembly

Issue 2 -04/08/2023

Safety and Care Advice

Important – Please read these instructions fully before starting assembly

• Check you have all the components and tools listed on the following pages.

• Remove all fittings from the plastic bags and separate them into their groups.

• Keep children and animals away from the work area, small parts could choke if swallowed.

• Make sure you have enough space to layout the parts before starting.

• During assembly do not stand or put weight on the product, this could cause damage.

• Assemble the item as close to its final position (in the same room) as possible.

• Assemble on a soft level surface to avoid damaging the unit or your floor.

• Parts of the assembly will be easier with 2 people.

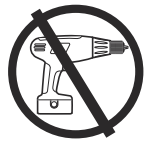

• To reduce the likelihood of damaging your product please ensure that your power drill is set on a low torque setting.

Care and maintenance

• Only clean using a damp cloth and mild detergent, do no use bleach or abrasive cleaners.

• From time to time check that there are no loose screws on this unit.

• This product should not be discarded with household waste. Take to your local authority waste disposal centre.

Handy Hints

• Assemble all parts and bolts loosely during assembly, only once the product is complete should you fully tighten the bolts

• Regularly check and ensure that all bolts and fittings are tightend properly.

WARNING
In order to help prevent overturning – please follow these instructions

To help prevent product toppling over please follow the below steps:-

Use the anti tip strap or wall fixing method provided (if applicable)
Do not allow children to climb or hang on the furniture
Do not open more than one drawer at a time
Do not place heavy items in the top drawers
Do not place heavy items on top of the furniture, unless the furniture has been designed for this purpose

Please note that only the anti tip strap is provided.
You will need to provide wall plugs and screws applicable for your wall type

Components - Panels

Please check you have all the panels listed below

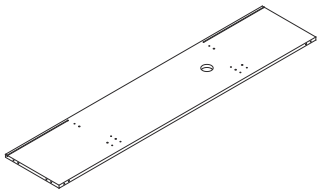

1 (200.7 x 36.5 x 1.8) x1

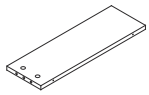

2 (45.7 x 15 x 1.5) x1

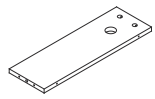

3 (45.7 x 15 x 1.5) x1

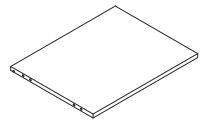

4 (45.7 x 36.2 x 1.5) x1

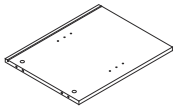

5 (45.7 x 36.2 x 1.5) x1

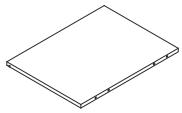

6 (47.6 x 36.4 x 1.5) x1

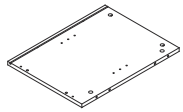

7 (47.6 x 36.4 x 1.5) x1

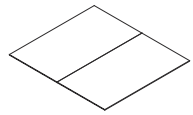

8 (49.6 x 46.6 x 0.25) x2

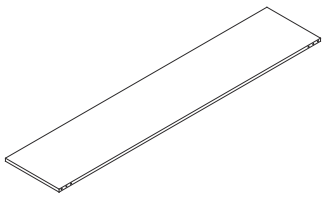

9 (204 x 36.5 x 1.8) x1

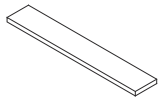

10 (60 x 10 x 1.8) x1

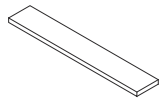

11 (60 x 10 x 1.8) x1

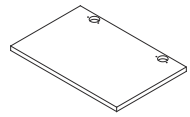

12 (49.3 x 40.4 x 1.8) x2

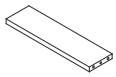

13 (36.4 x 10 x 1.8) x2

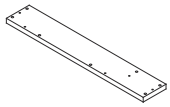

14 (60 x 10 x 1.8) x1

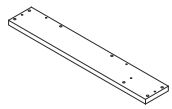

15 (60 x 10 x 1.8) x1

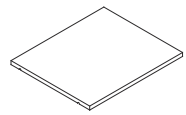

16 (48.7 x 34.5 x 1.5) x2

Components - Fittings

Please check you have all the fittings listed below

Note: The quantities below are the correct amount to complete the assembly. In some cases more fittings may be supplied than are required.

A 7*39mm Cam Bolt x 26	**B** Camlock x 26	**C** 8*30mm Wooden Dowel x 48
D 3.5*14mm Screw x 16	**E** 5*40mm Screw x 18	**F** Door Bumper x 2
G Adjustable Feet x 2	**H** 4*14mm Screw x 12	**I** Shelf Support Pin x 8
J Back Panel Stiffener x 8	**K** Hinge x 4	**L** Wall Fixing Pack x 2

Tools required

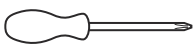

Phillips screwdriver
(medium & large)

Ruler - Use this ruler to help correctly identify the screws

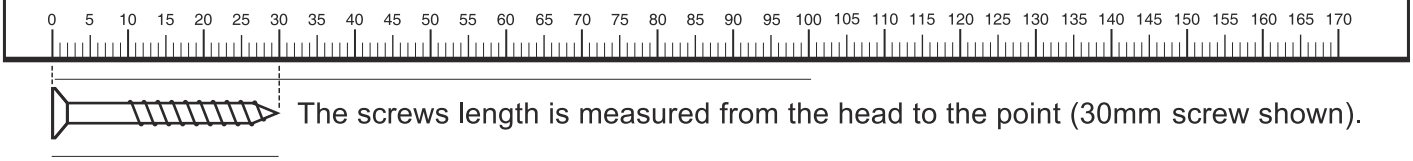

The screws length is measured from the head to the point (30mm screw shown).

Using Camlocks

Step 1

Connect the male camlock as directed in the assembly instructions using a screwdriver.

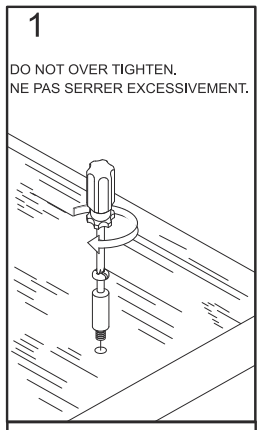

Step 2

Push the male camlock into the entry hole.

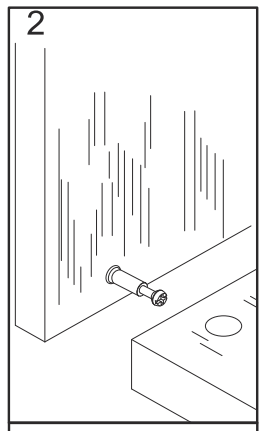

Step 3

Insert the female camlock as shown in the instructions.

Note: ensure that the arrow on the top of the camlock points towards the entry hole for the male camlock.

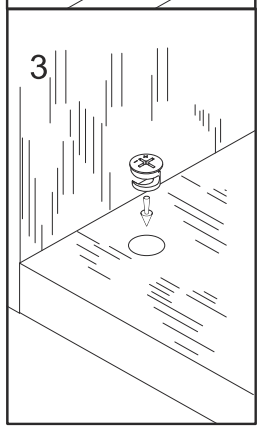

Step 4

Turn the female camlock clockwise with a screwdriver.

You should feel a click when the camlock is locked in place.

The joint is now secure.

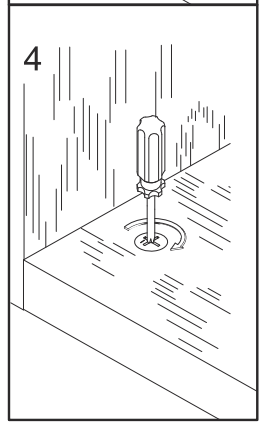

Adjusting Hinges

Hinge adjustment:

a: To move the top panel up or down, loosen screws shown and move top panel to suit

b.To move the top panel in or out, loosen screws shown and move top panel to suit.

Retighten screws

C:To move the top panel left or right, adjust screws shown.

a:

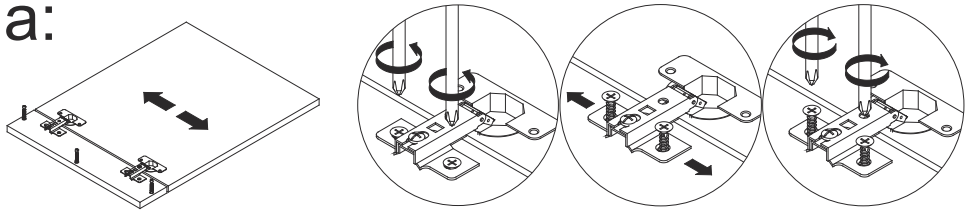

b:

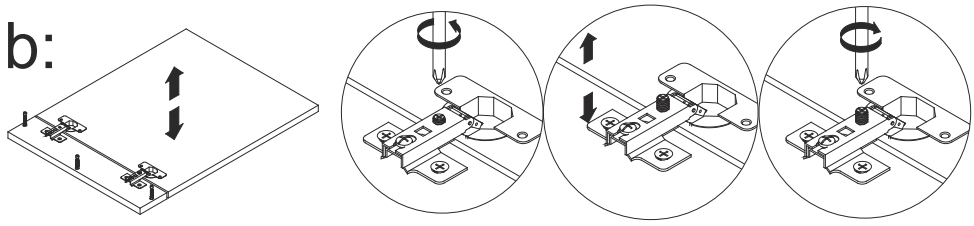

c:

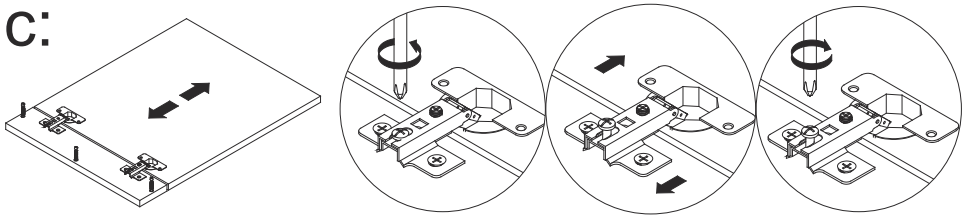

Assembly Instructions

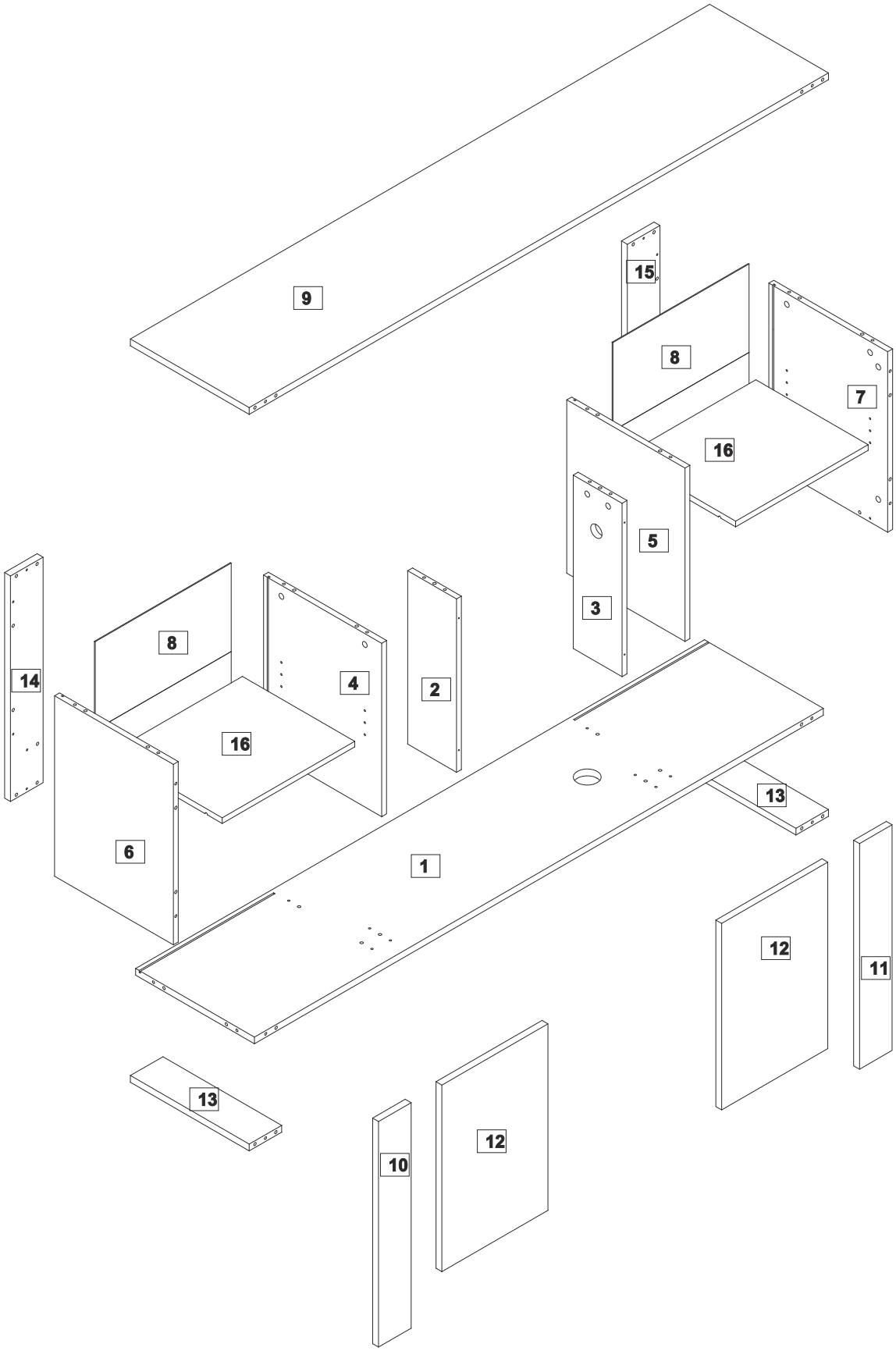

Assembly Instructions

Step 1

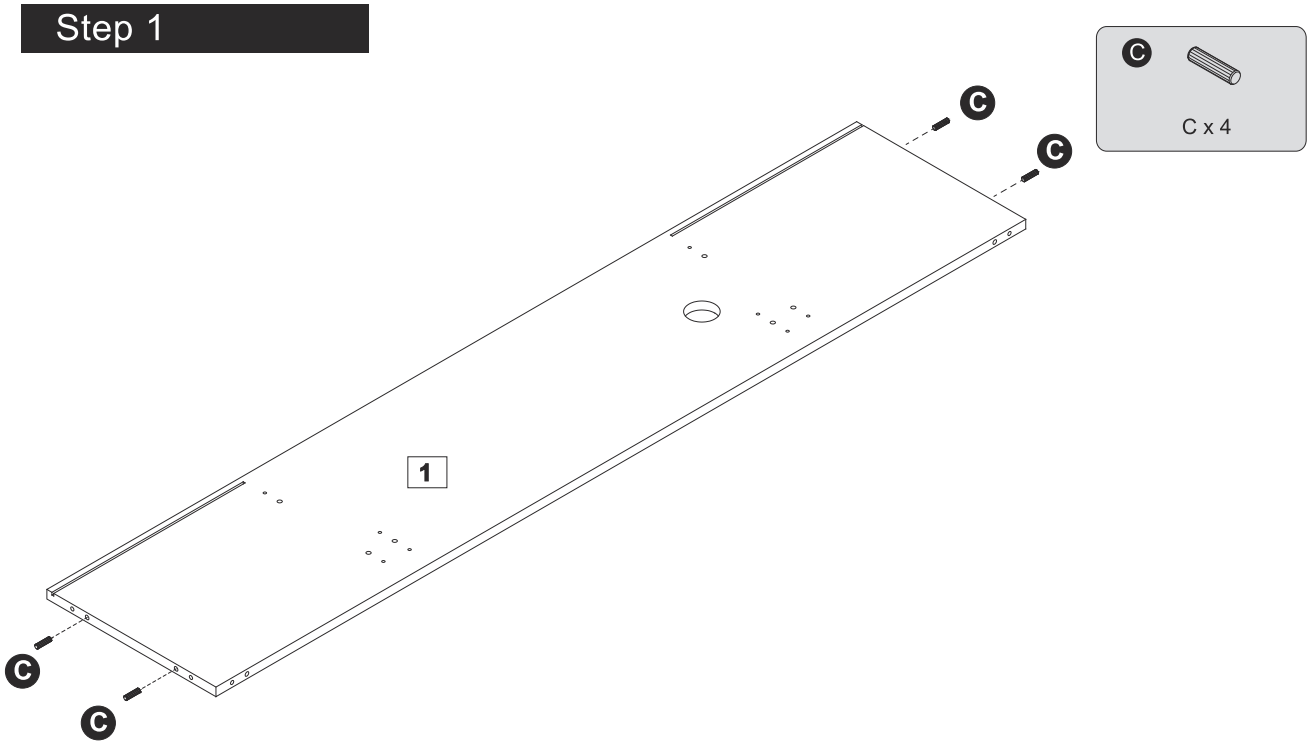

Insert wooden dowel (C) into part (1).

Step 2

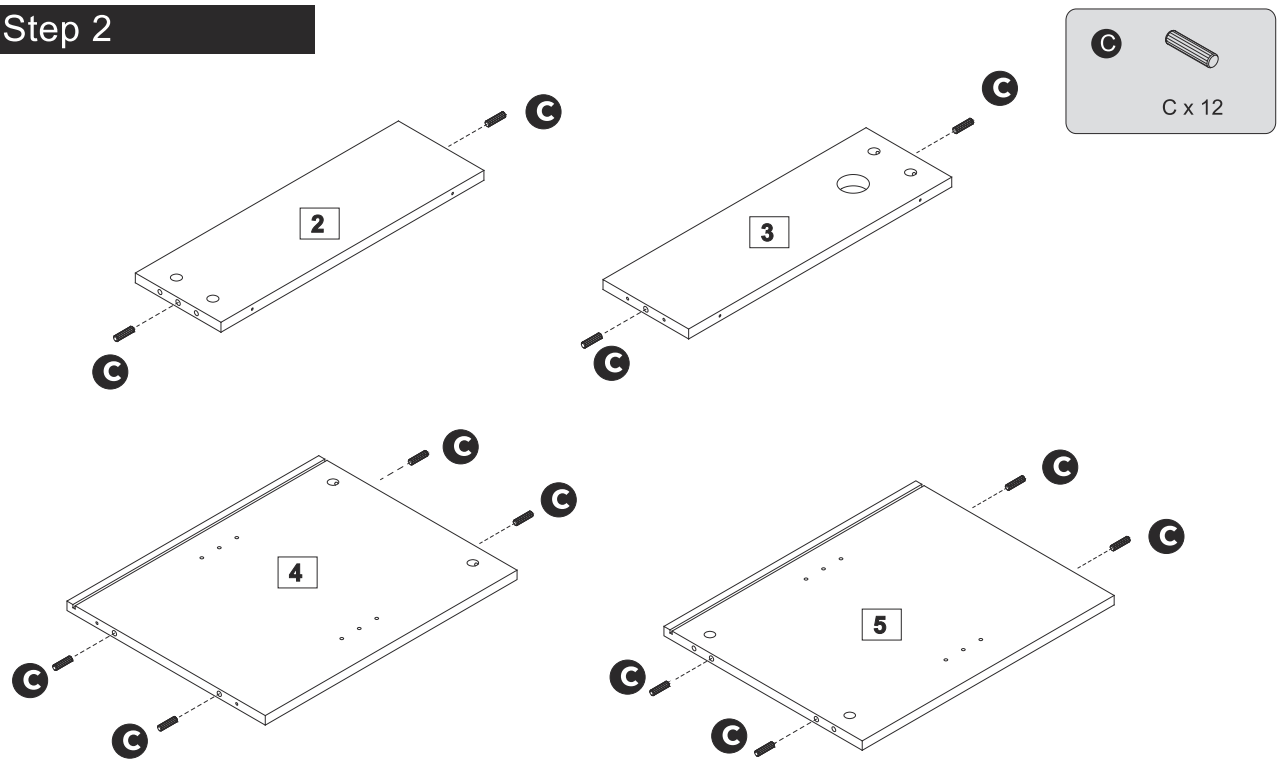

Insert wooden dowel (C) into part (2, 3, 4, 5)

Assembly Instructions

Step 3

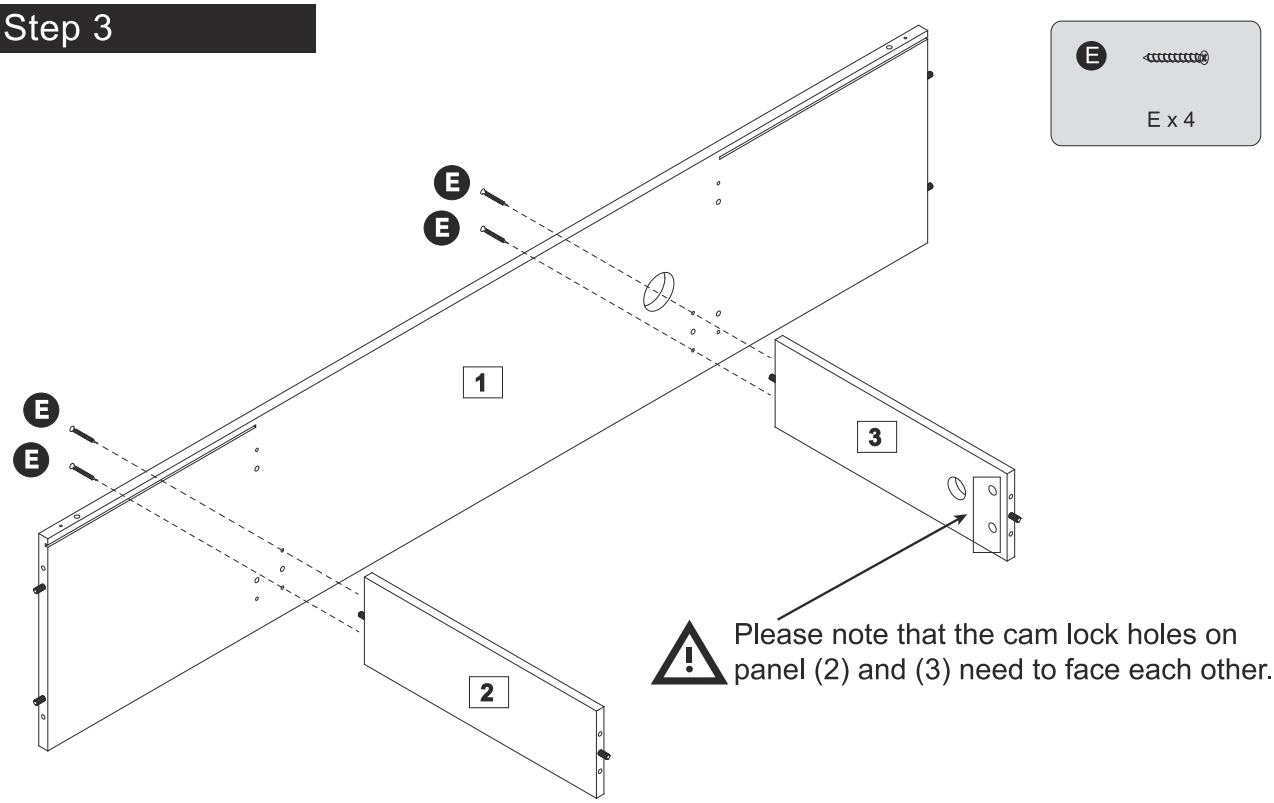

Attach panel (2, 3) to bottom panel (1) using screw (E) with a screwdriver.

Step 4

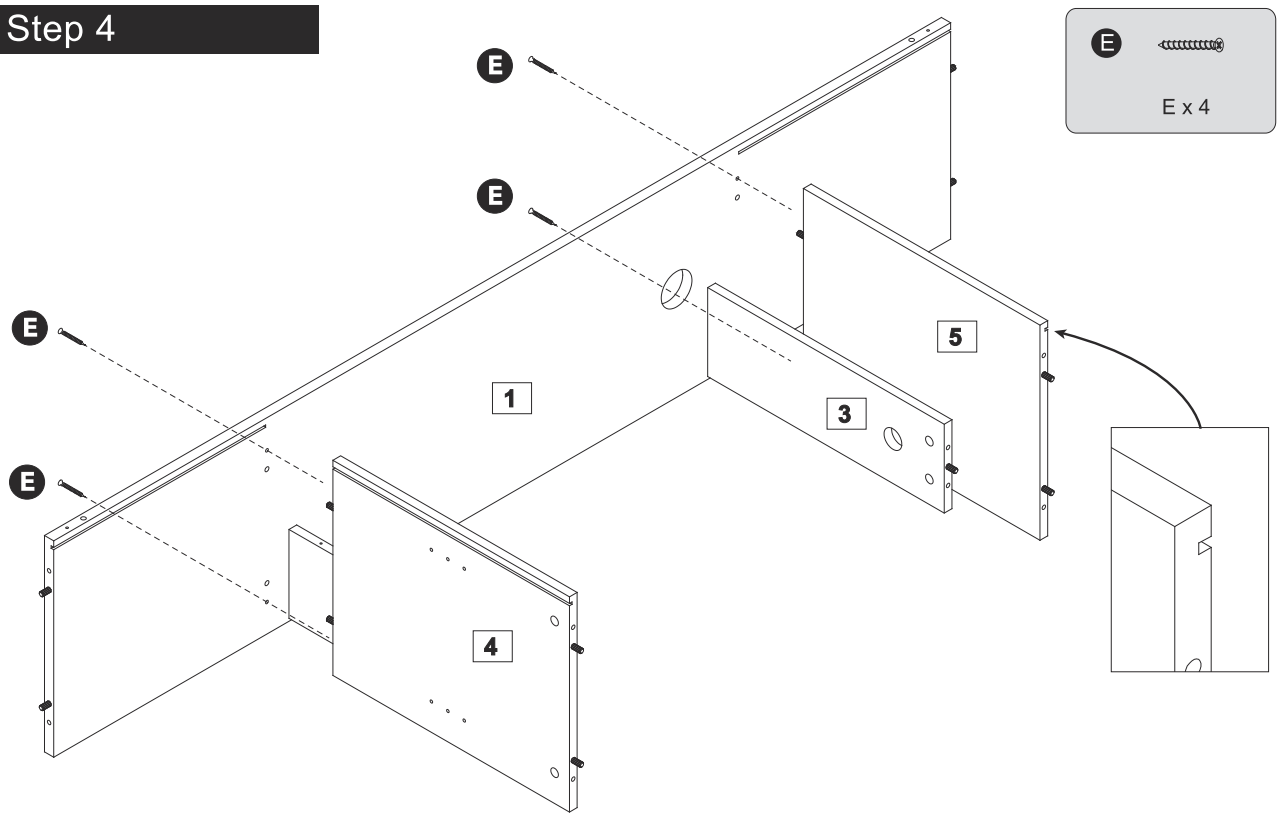

Attach panel (4, 5) to bottom panel (1) using screw (E) with a screwdriver.

Assembly Instructions

Step 5

CAM-LOCK
Tighten until shoulder is flush with panel.Do not overtighten or undertighten(see example below)

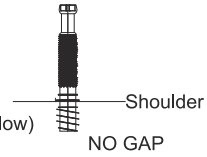

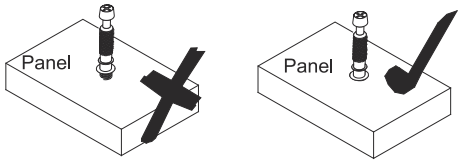

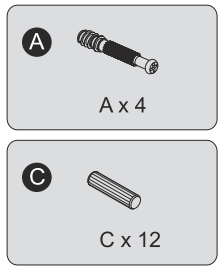

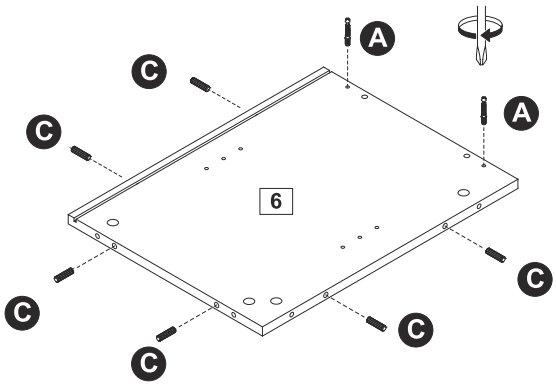

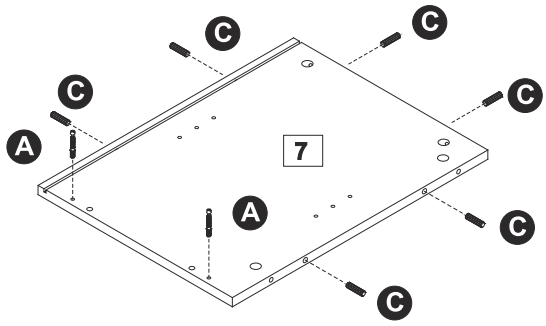

Insert wooden dowel (C) into part (6, 7).
Attach cam bolt (A) to part (6, 7) with a screwdriver.

Step 6

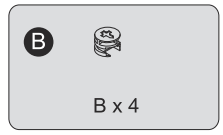

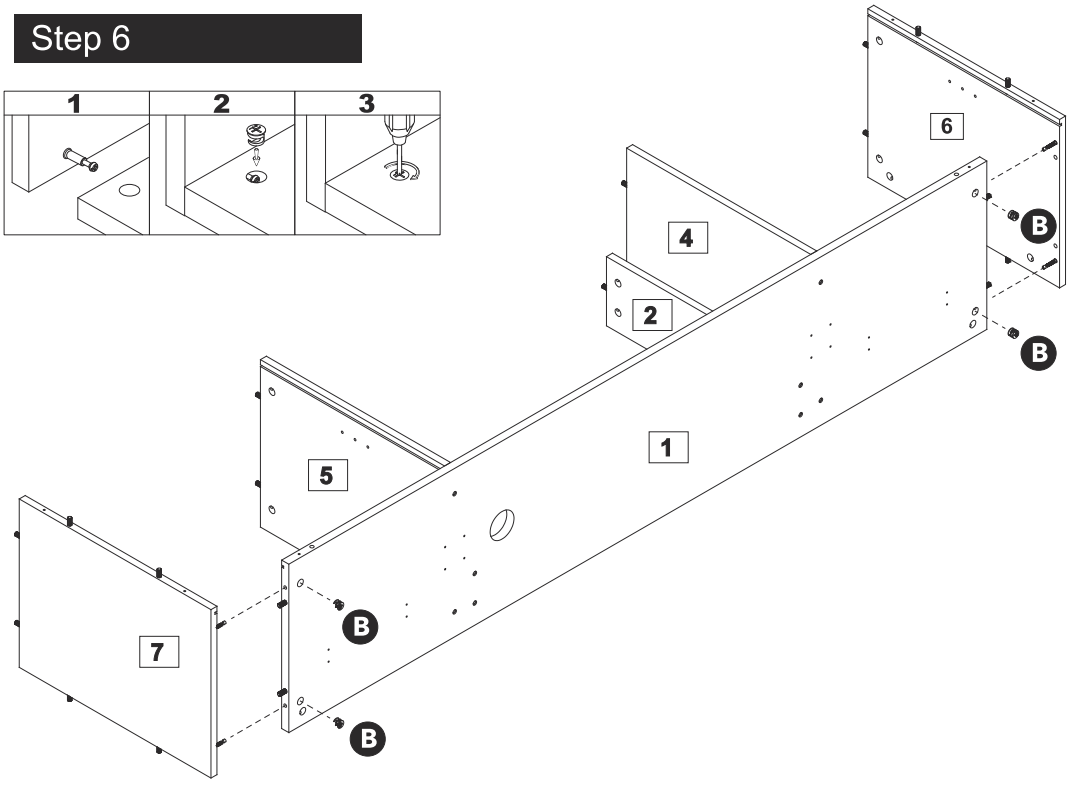

Attach side panels (6, 7) to bottom panel (1), then insert and secure cam lock (B) to bottom panel (1) to lock it.

Assembly Instructions

Step 7

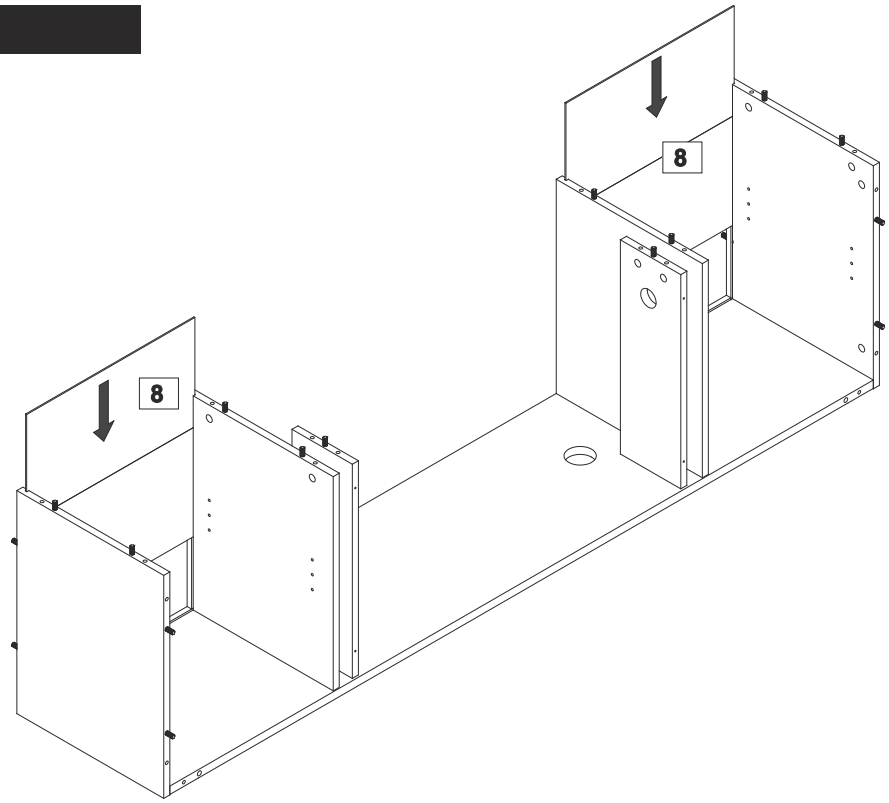

Slide the back panels (8) into grooves as per diagram.

Step 8

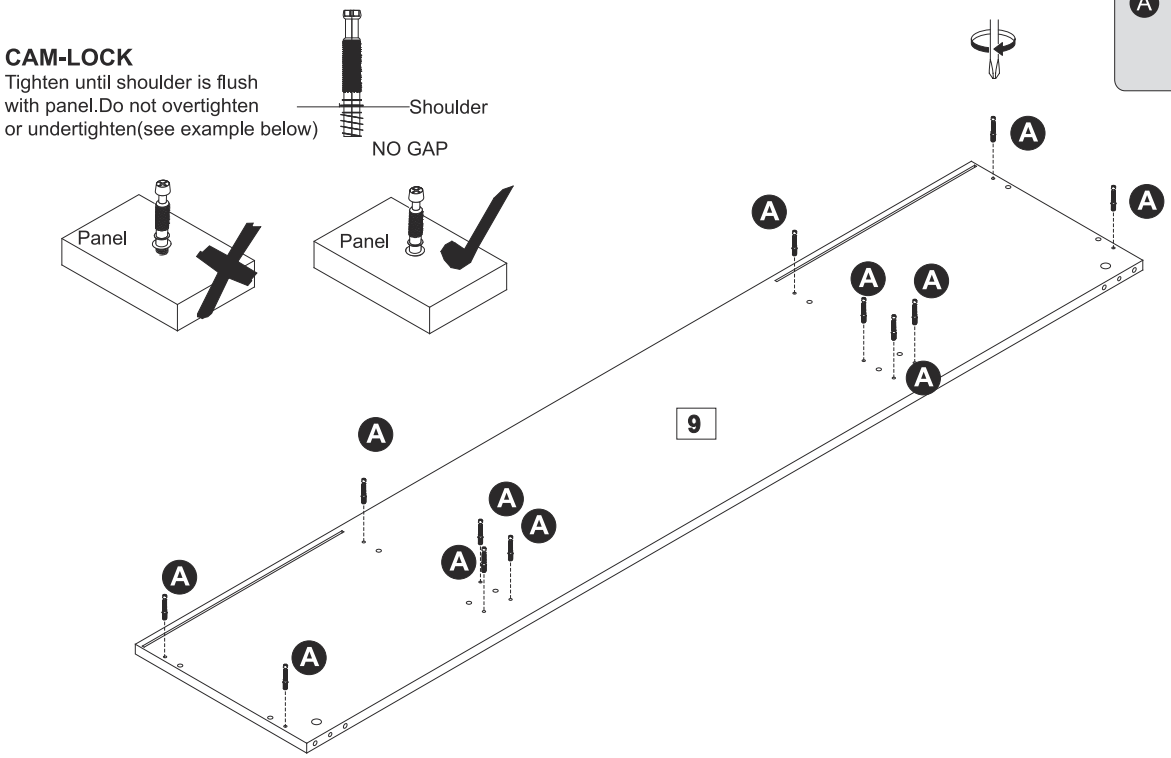

Attach cam bolt (A) to part (9) with a screwdriver.

Assembly Instructions

Step 9

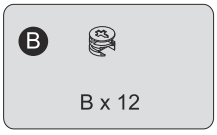

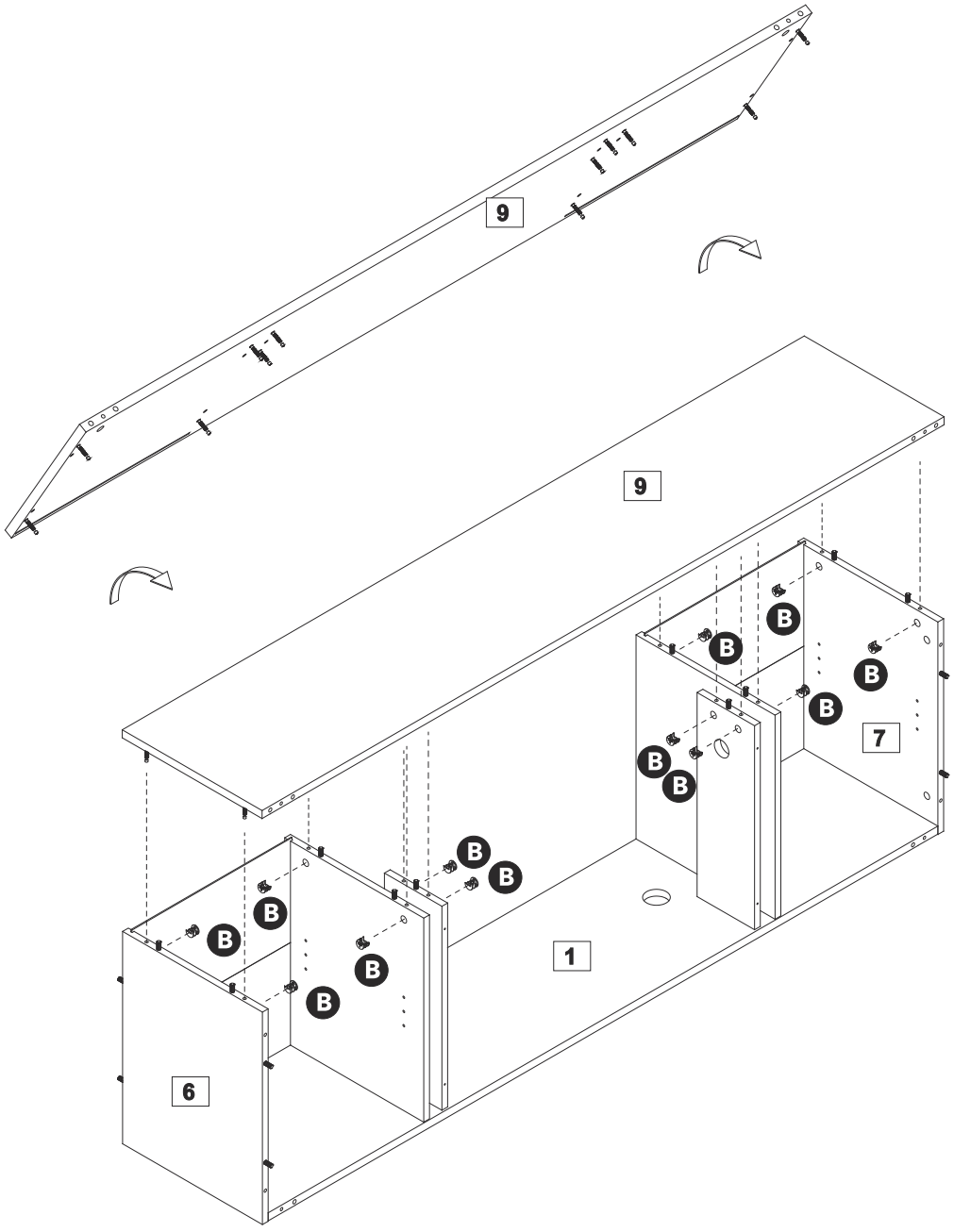

Attach top panel (9) to panels (2, 3, 4, 5, 6, 7), then insert and secure cam lock (B) to panels (2, 3, 4, 5, 6, 7) to lock them.

Assembly Instructions

Step 10

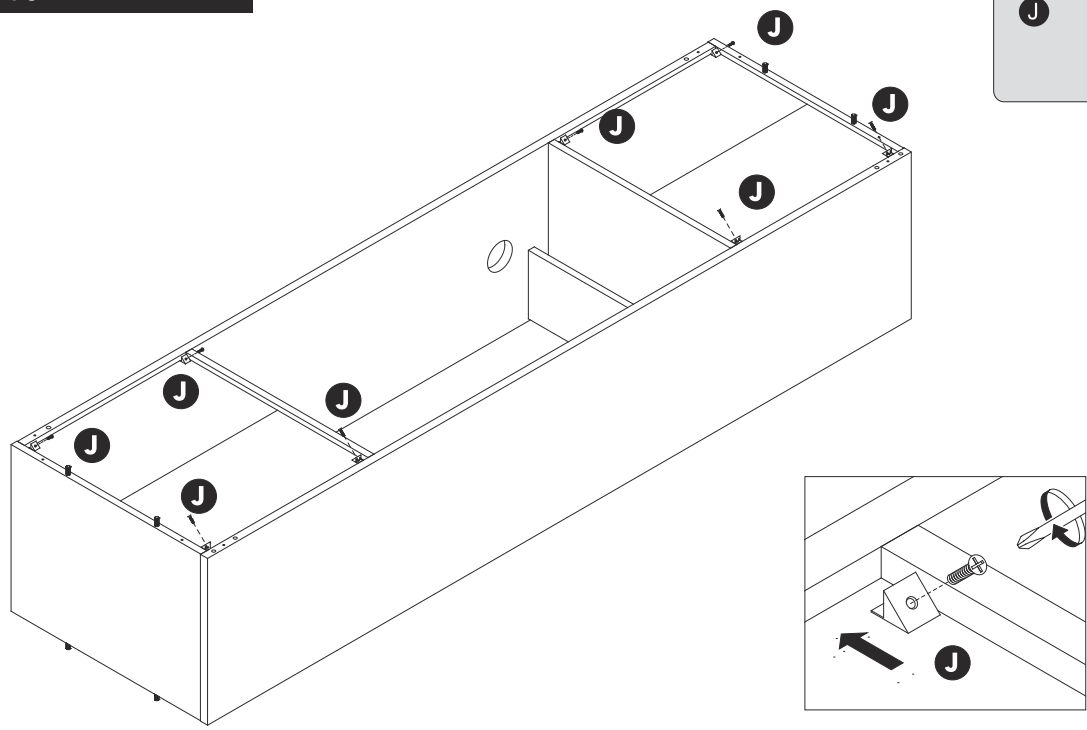

Attach plastic wedge (J) to back panels (8) using screws with a screwdriver.

Step 11

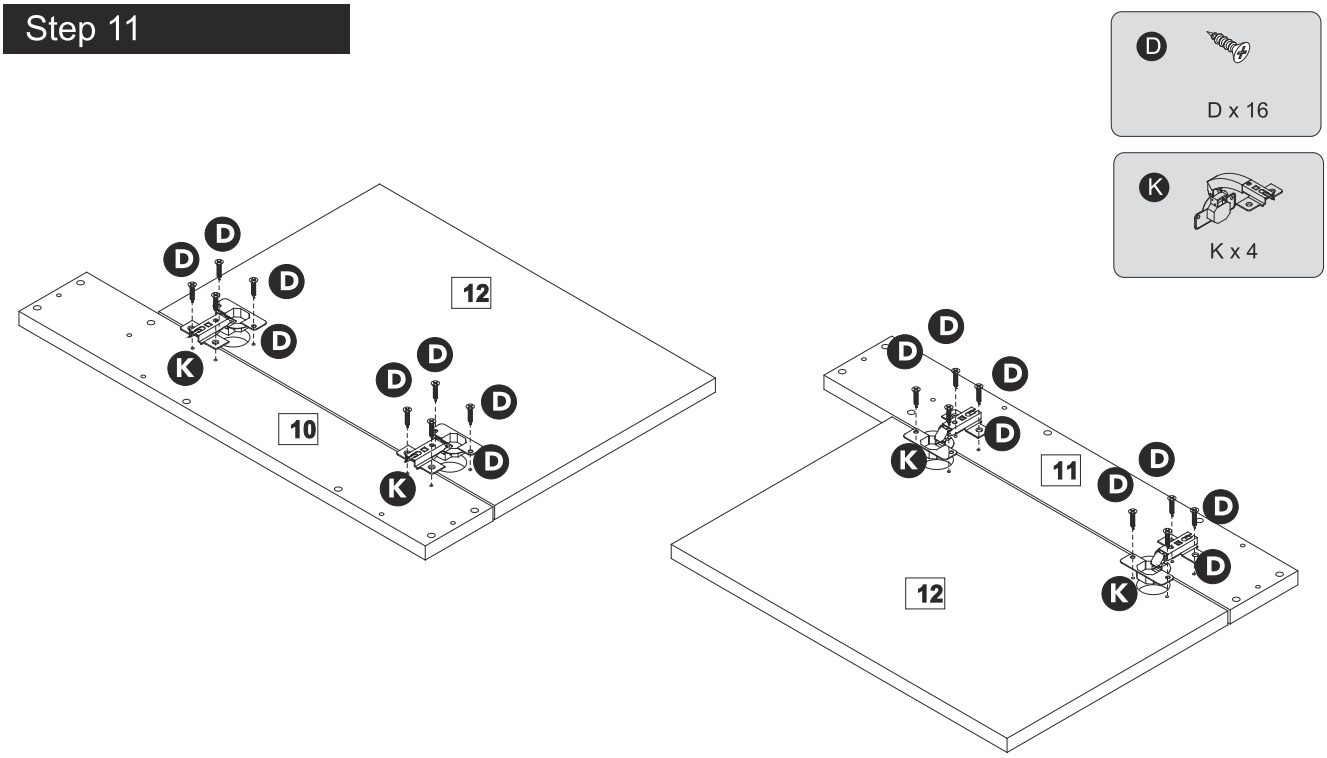

Use screws (D) to secure hinges (K) to doors (12), and then secure hings (K) to part (10, 11) with a screwdriver.

Assembly Instructions

Step 12

CAM-LOCK
Tighten until shoulder is flush with panel.Do not overtighten or undertighten(see example below)

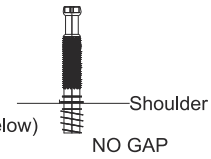

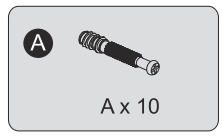

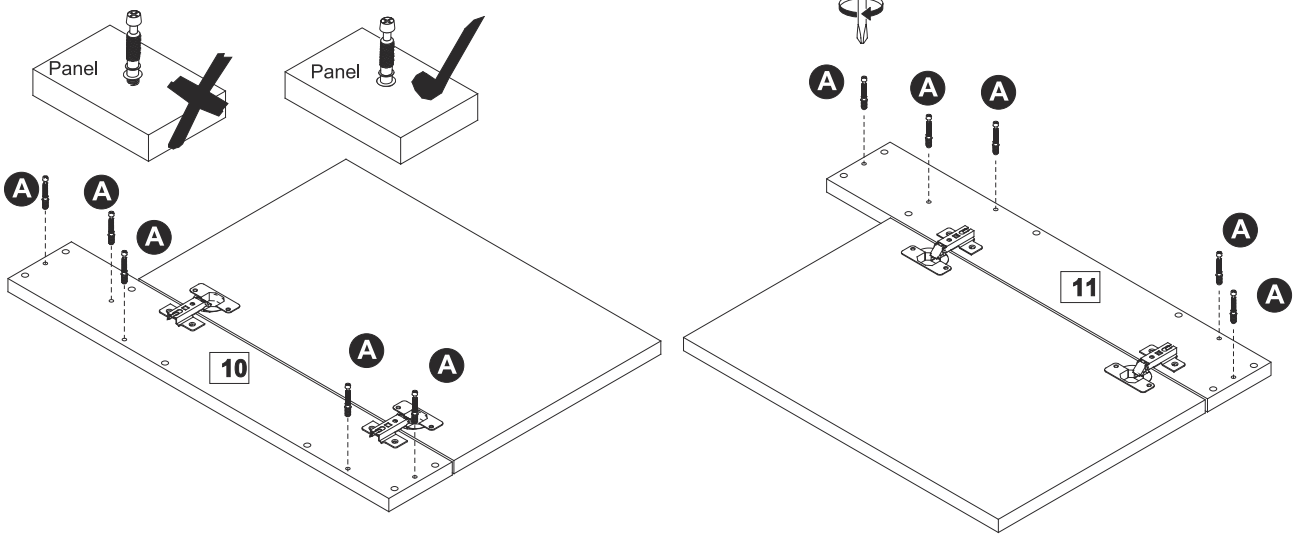

Attach cam bolt (A) to part (10, 11) with a screwdriver.

Step 13

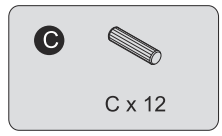

Bottom up

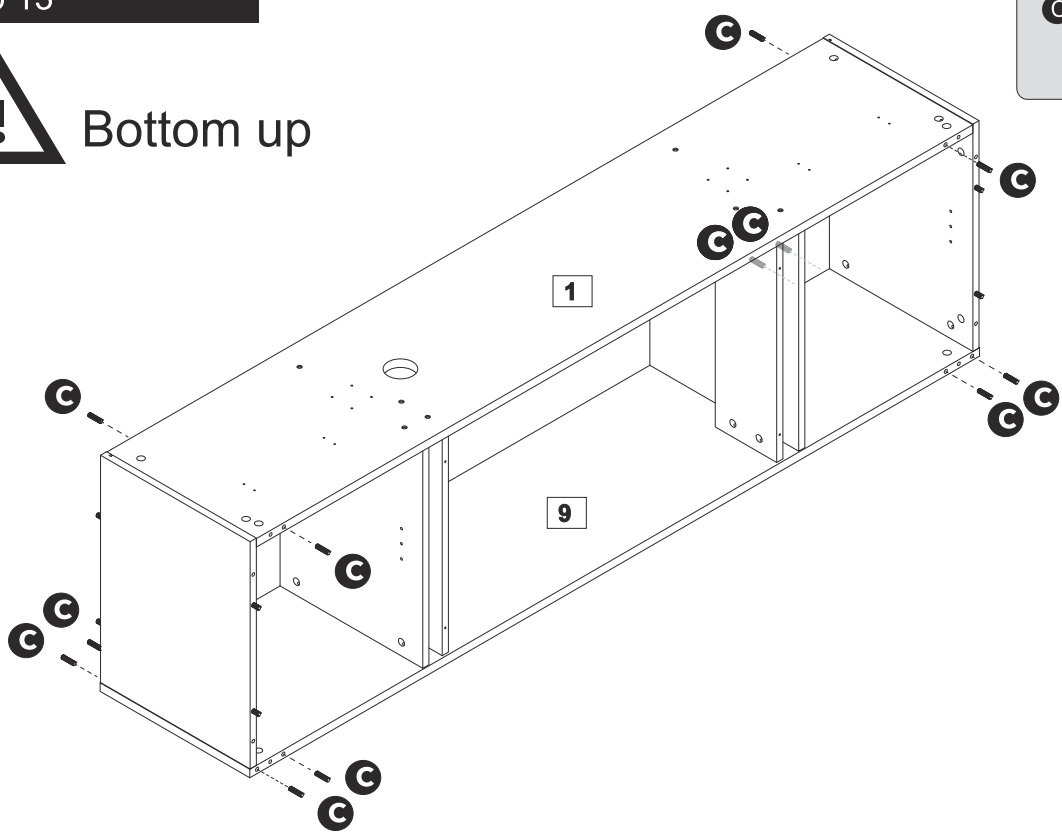

Insert wooden dowel (C) into part (1, 9).

Assembly Instructions

Step 14

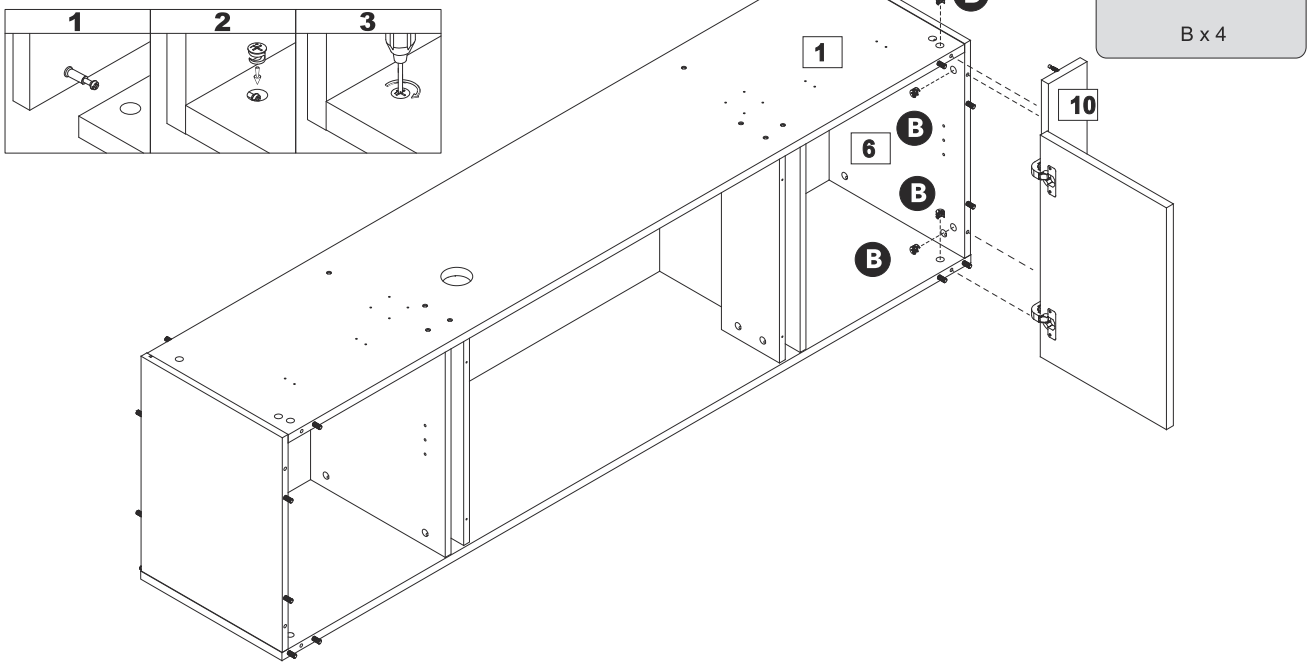

Attach part (10) to part (1, 6, 9), then insert and secure cam lock (B) to part (1, 6, 9) to lock them.

Step 15

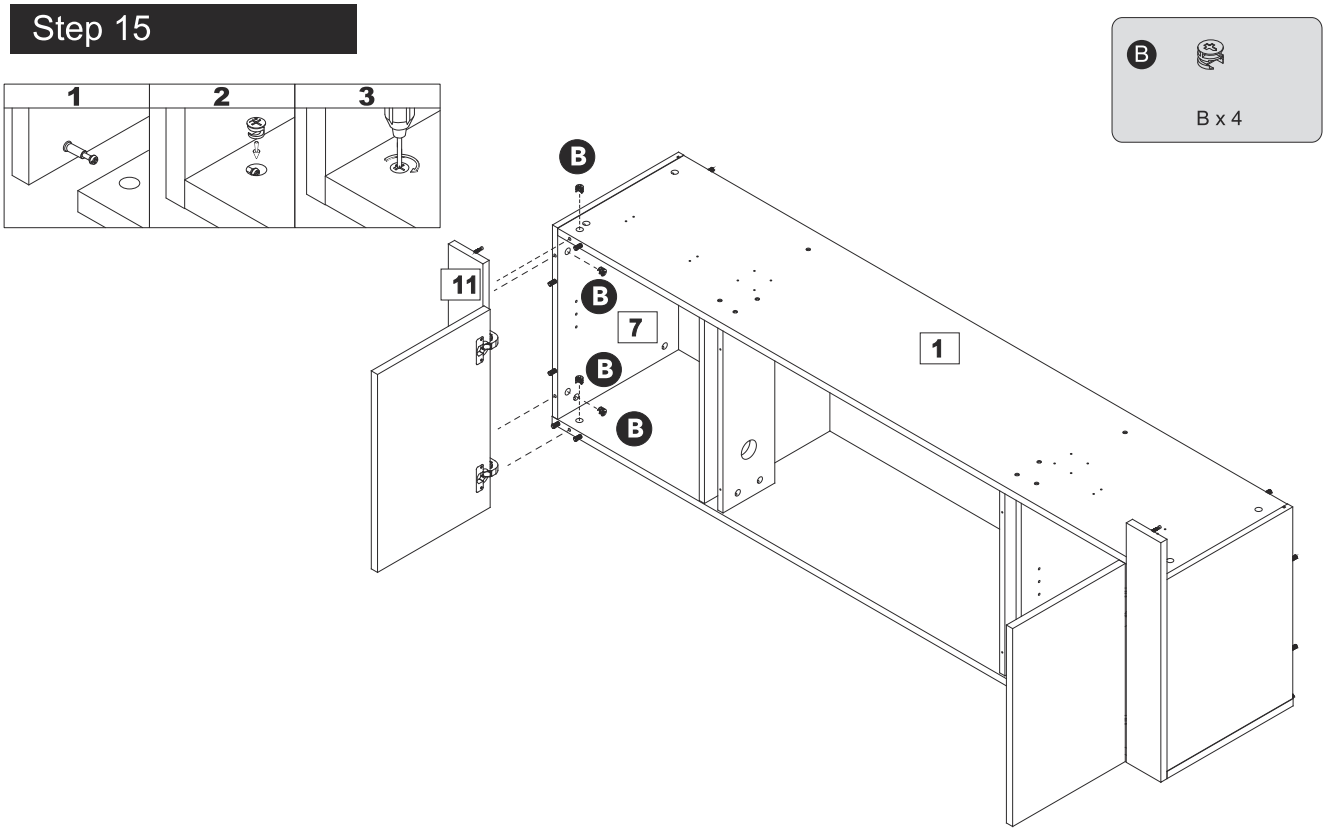

Attach part (11) to part (1, 7, 9), then insert and secure cam lock (B) to part (1, 7, 9) to lock them.

Assembly Instructions

Step 16

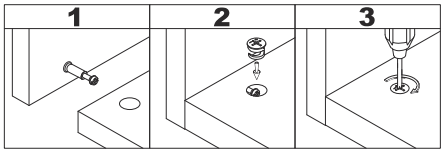

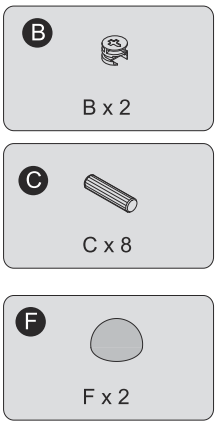

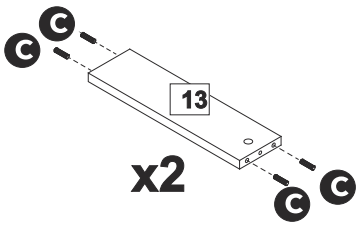

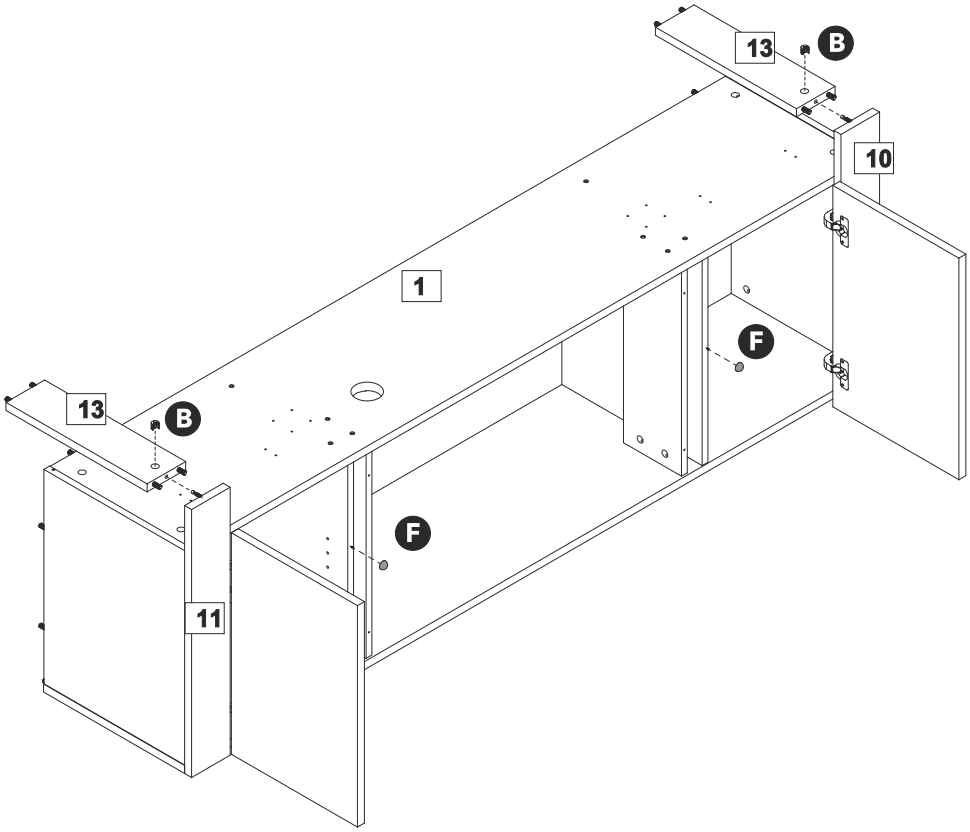

Insert wooden dowel (C) into parts (13).
Attach parts (13) to parts (10, 11), then insert and secure cam lock (B) to parts (13) to lock them.

Assembly Instructions

Step 17

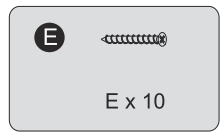

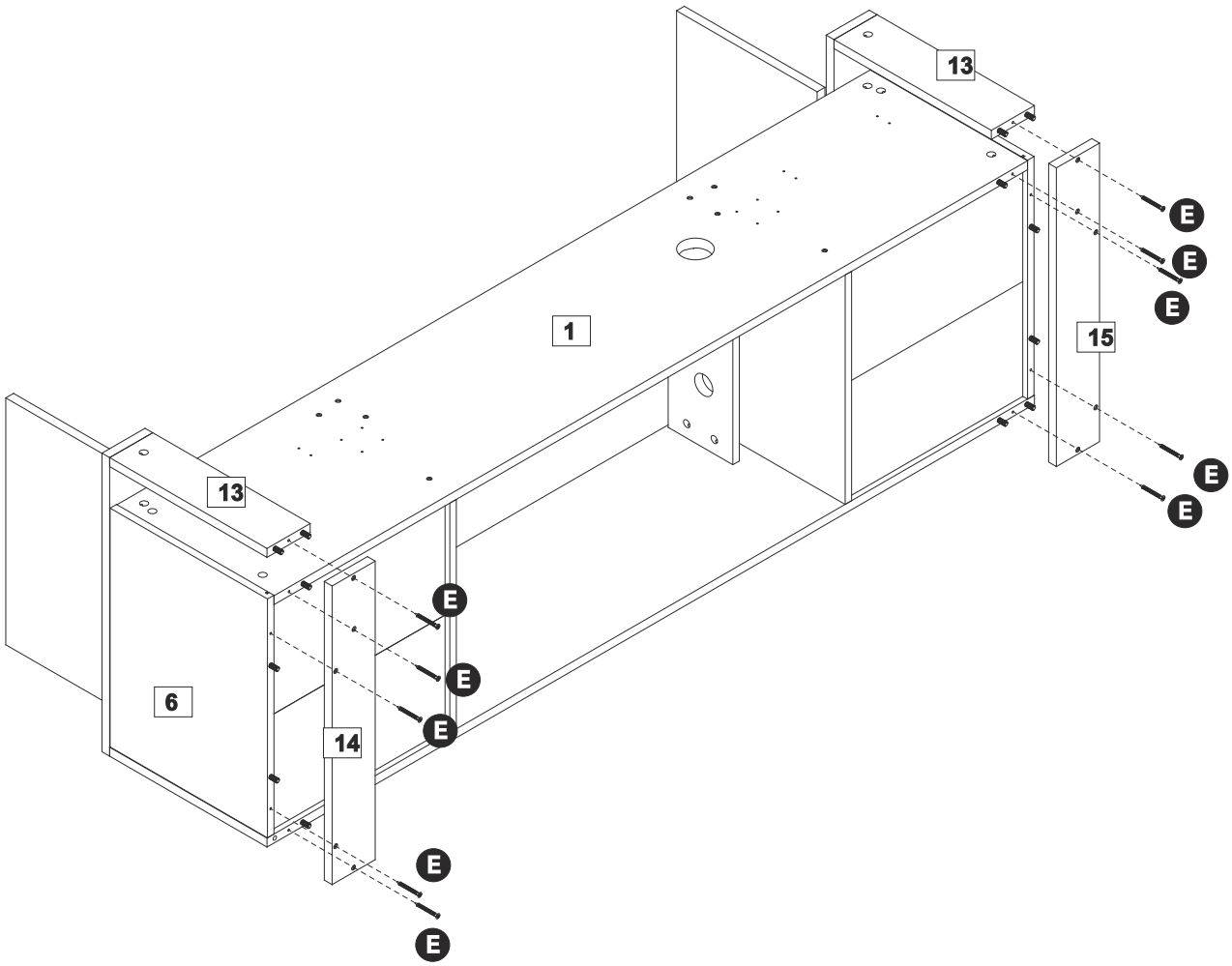

Attach part (14) to partsl (1, 6, 9, 13) using screw (E) with a screwdriver.
Then attach part (15) to partsl (1, 7, 9, 13) using screw (E) with a screwdriver.

Step 18

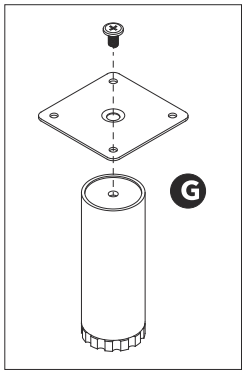

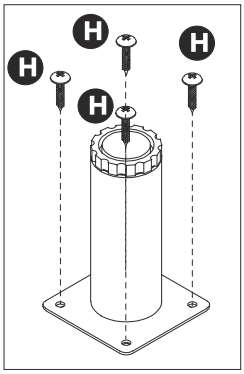

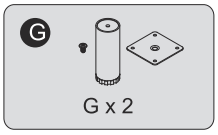

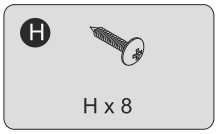

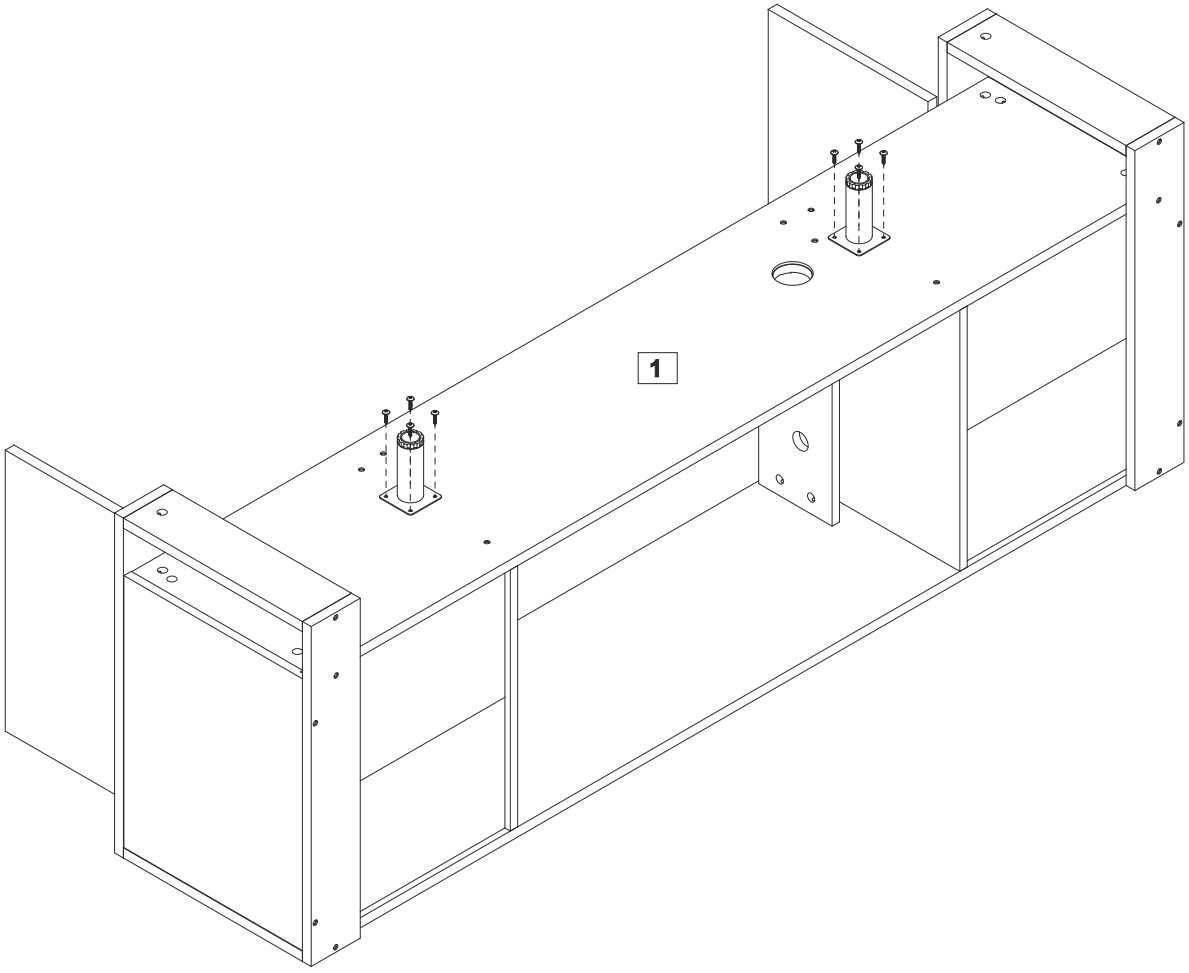

Attach adjustable leg (G) to bottom panel (1) using screw (H) with a screwdriver.

Assembly Instructions

Step 19

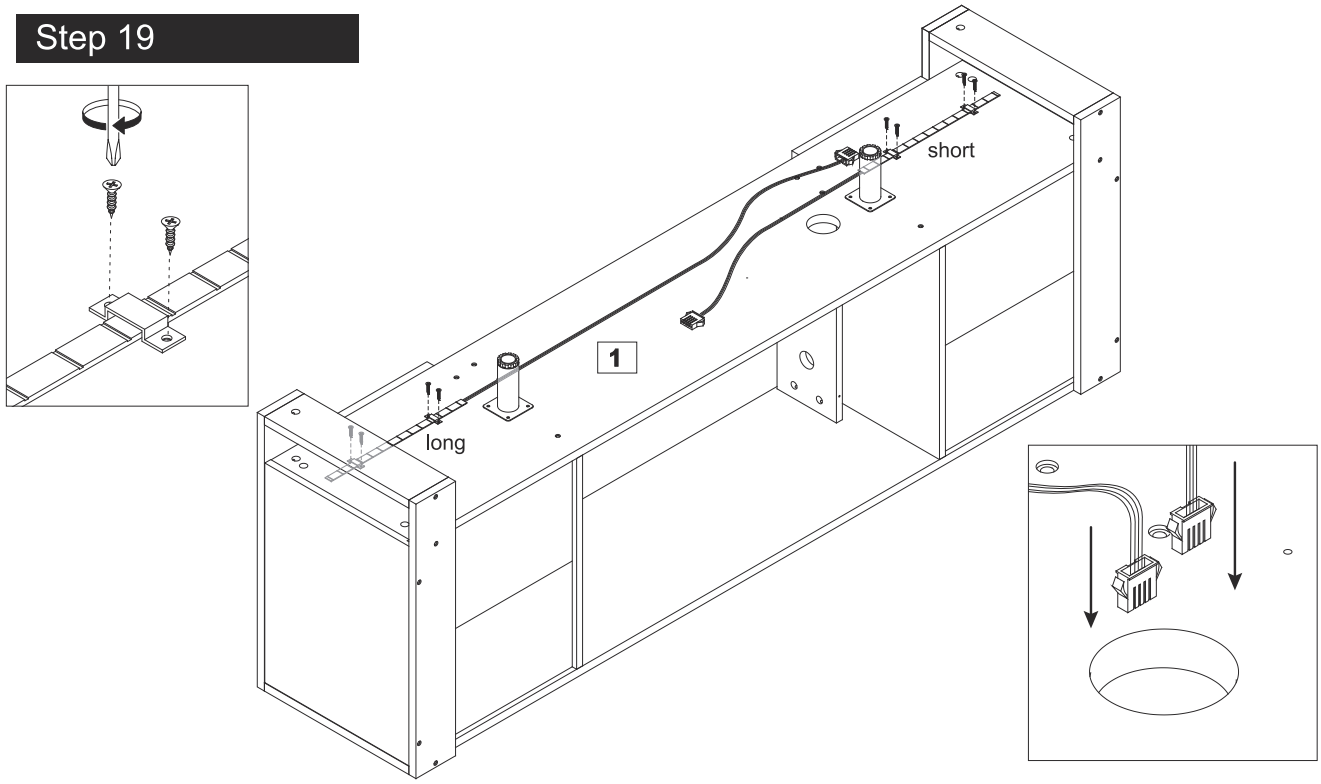

Attach long and short LED lights to bottom panel (1), then get the LED lights through the hole on the bottom panel.
Note: you can find buckles and screws in the box of the fireplace.

Step 20

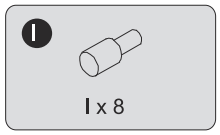

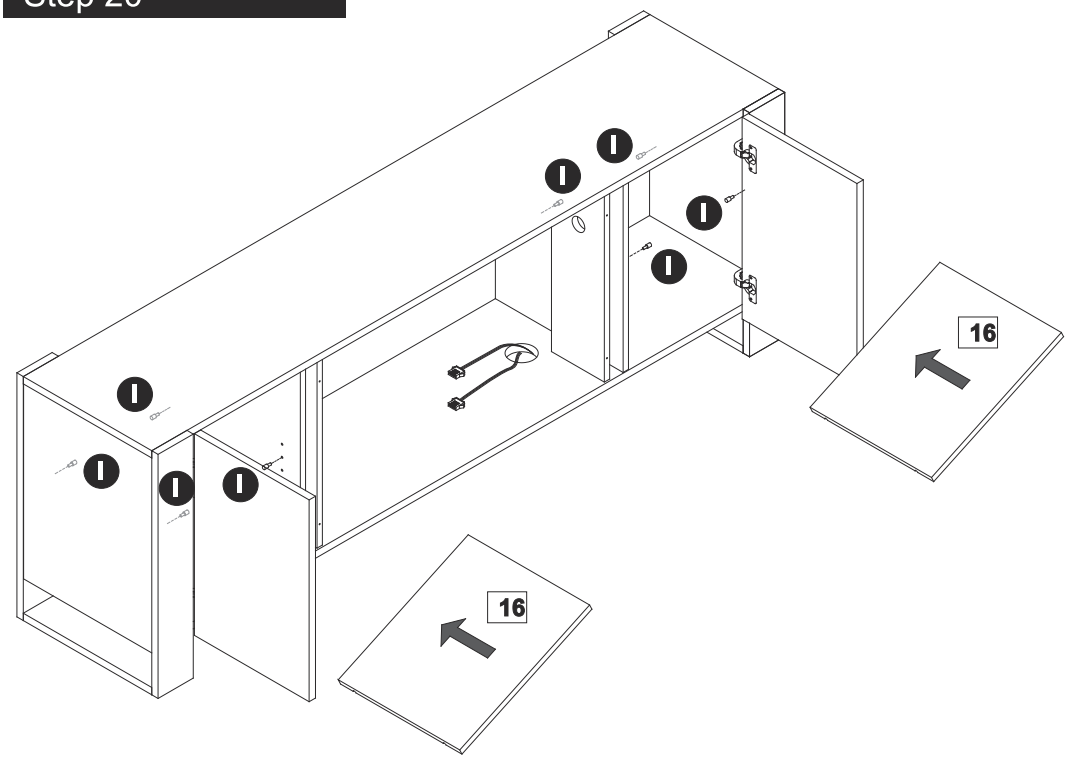

Insert shelf support pin (I) into part (4, 5, 6, 7).
Place part (16) on the top of support pins.

Assembly Instructions

Step 21

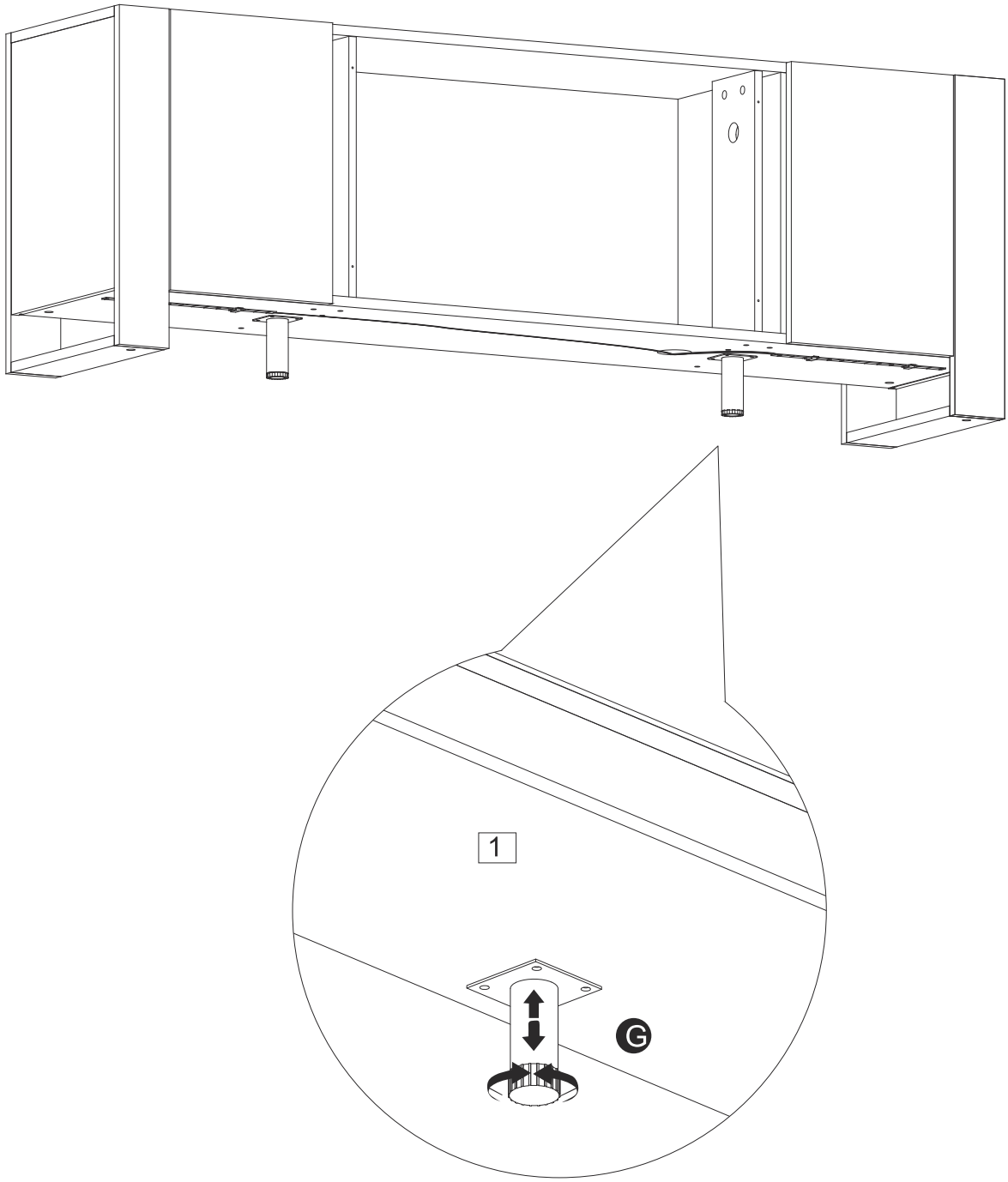

Level the furniture by adjusting the height of the feet

Assembly Instructions

Step 22

Note: Fireplace is in the BOX of Fireplace, not in the box of TV stand.

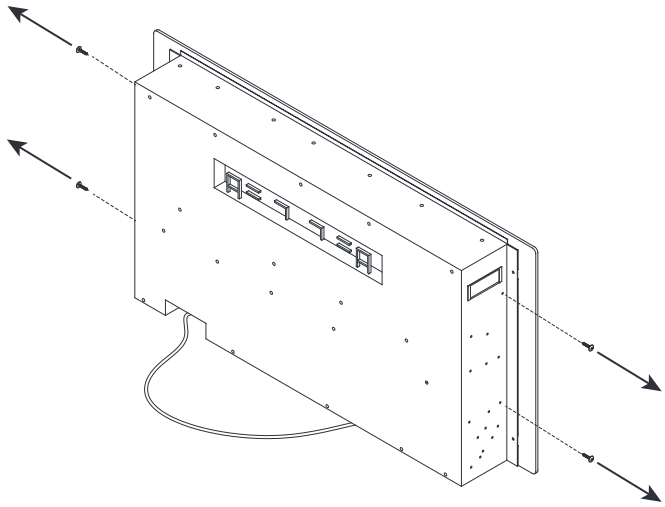

Before attaching fireplace to TV stand, unscrew four silver screws on the both sides of fireplace.

Step 23

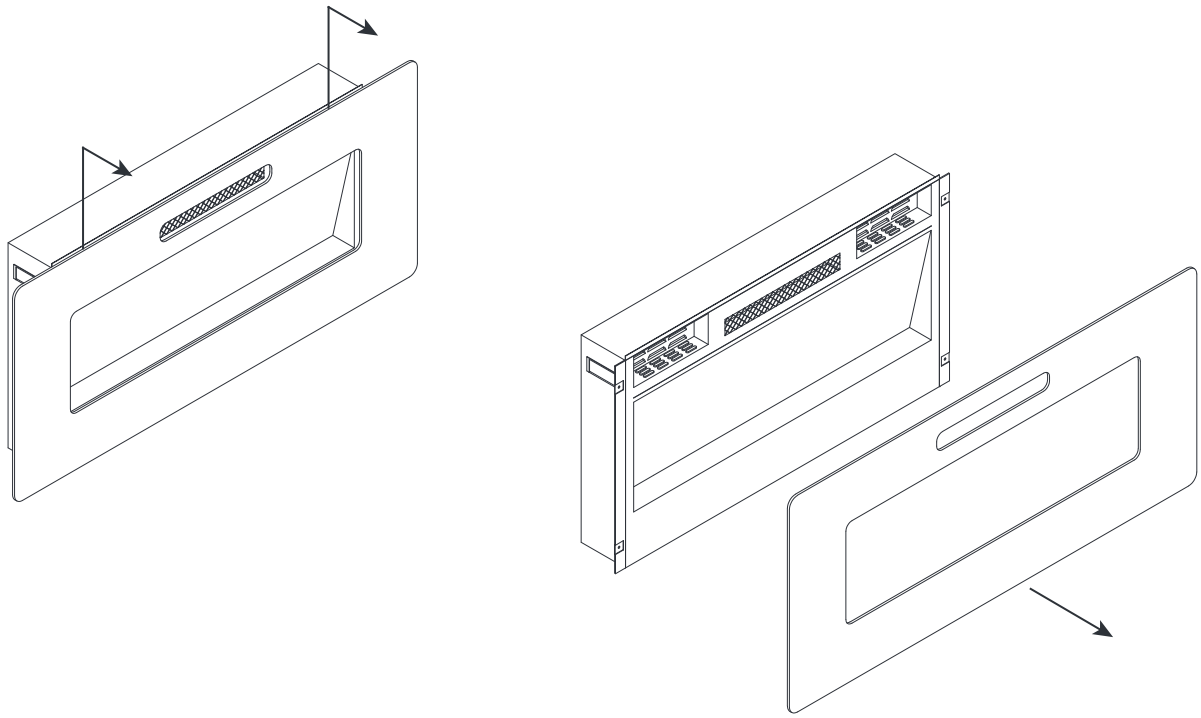

Carefully remove the front glass, and place it on a soft and clean surface.

Assembly Instructions

Step 24

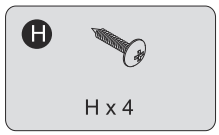

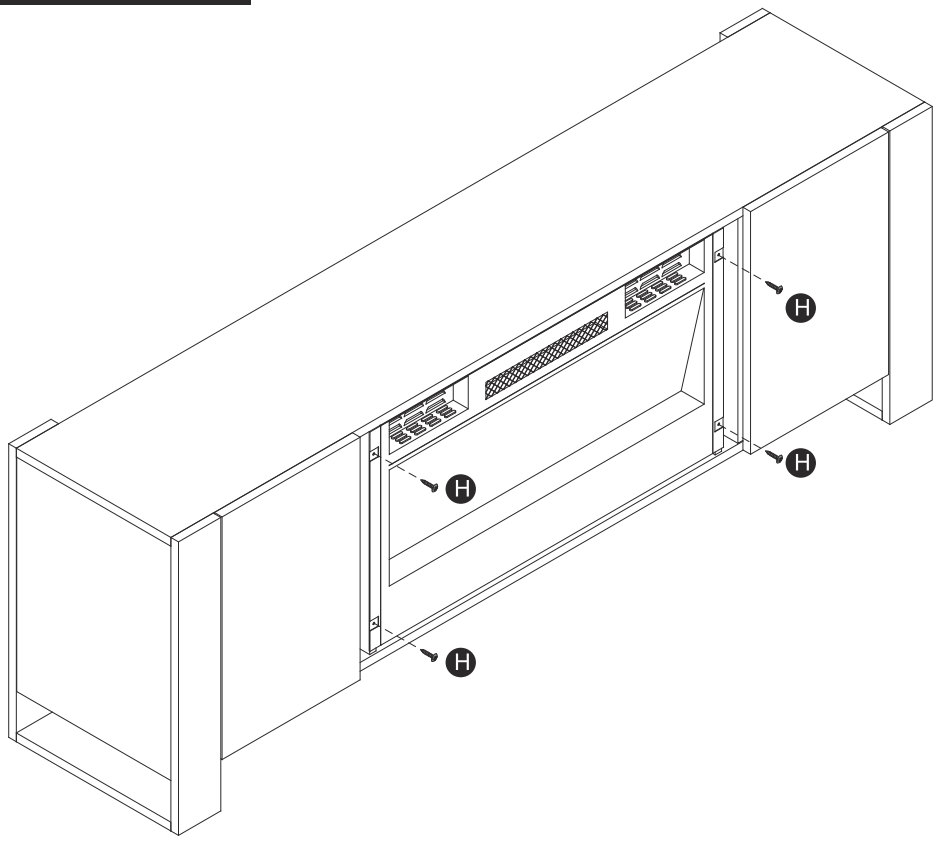

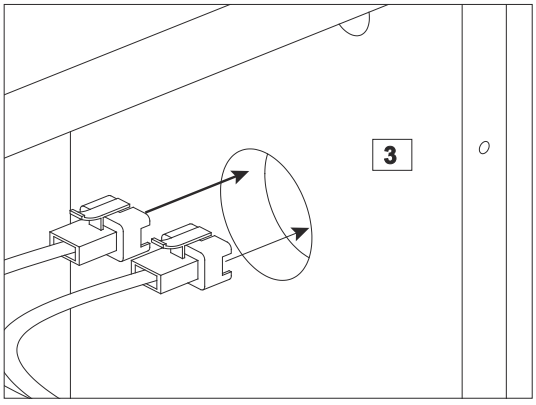

Insert the fireplace to the stand and secure it with screw (H).

Step 25

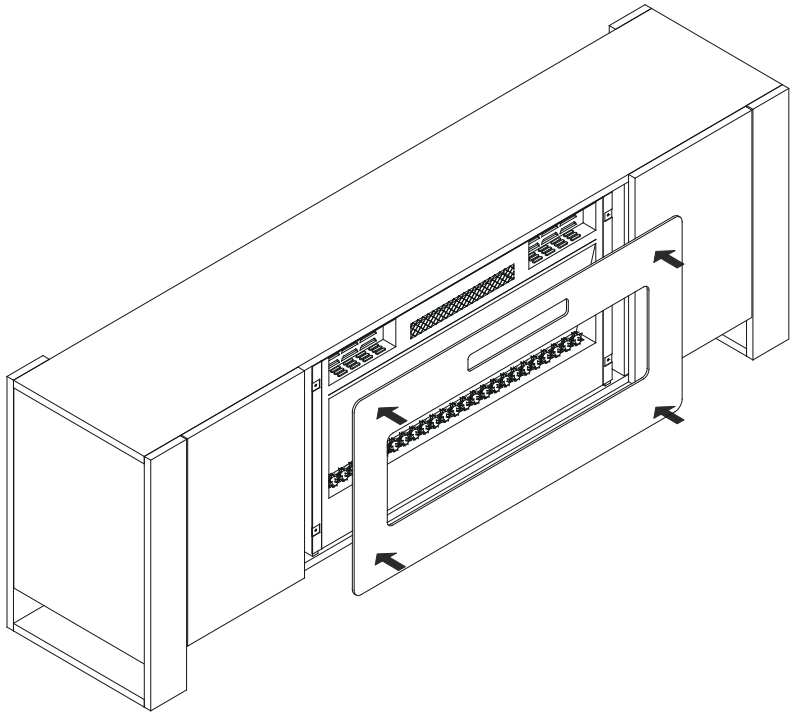

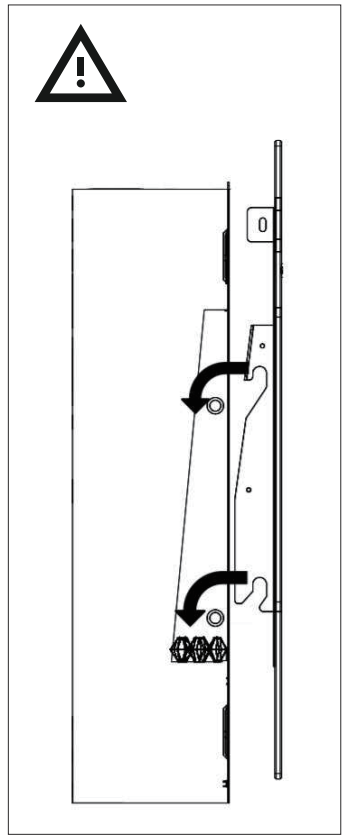

Put crystal in the fireplace, then attach the glass front to the fireplace.

Step 26

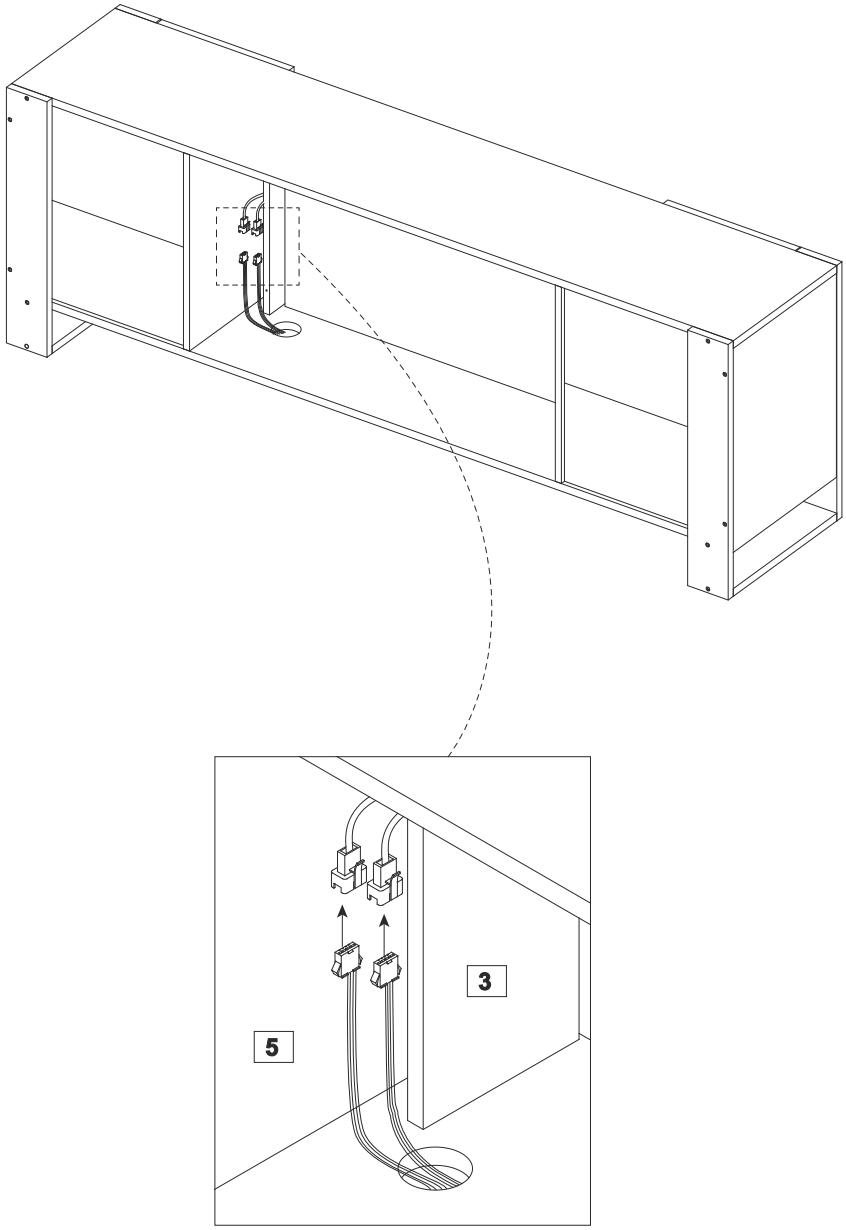

Connect the LED lights with the power cables.

Step 27

The unit is floor standing, but it is recommended that the unit is secured to the wall.

1. Move the unit into desired position.

2. Mark the wall with a suitable scribe the position of the fixing holes.

Warning:
Before driling,check wall for hidden pipes and cables.

3. Drill holes and insert 2 x wall plug

4. Attach 2 x Wall Straps to to the top of the unit using 2 x Washers and 2 x Screws

5. Secure the straps to the wall using 2 x Washers and 2 x Screws

Note: To hide the straps behind the unit, drill the holes lower than the top of the unit

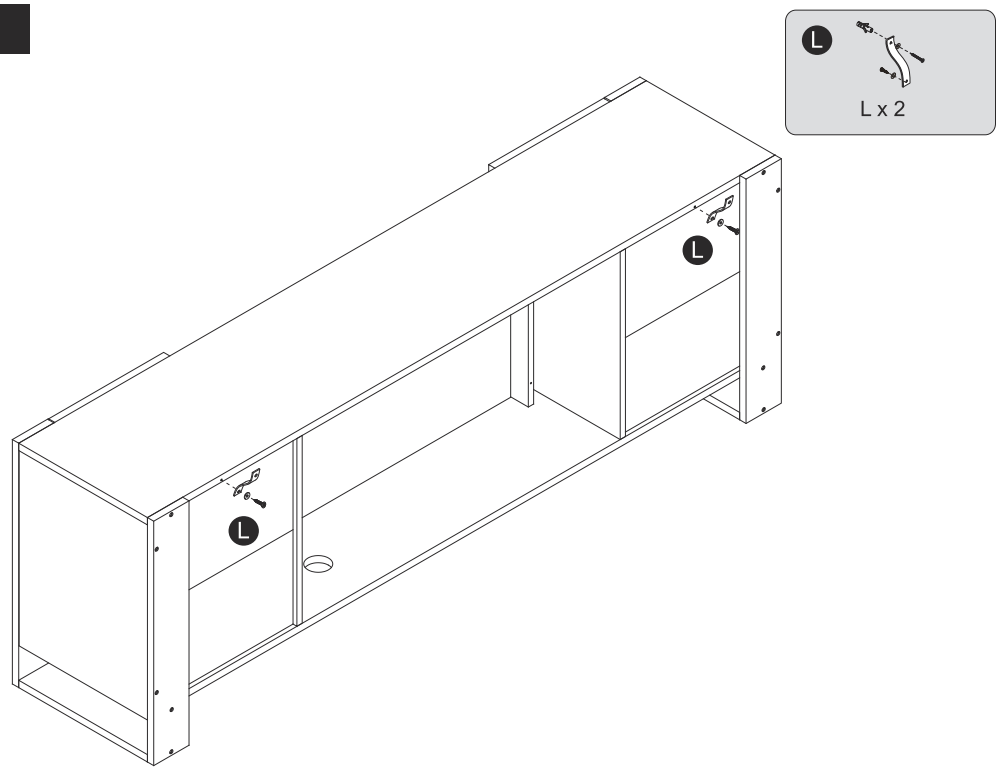

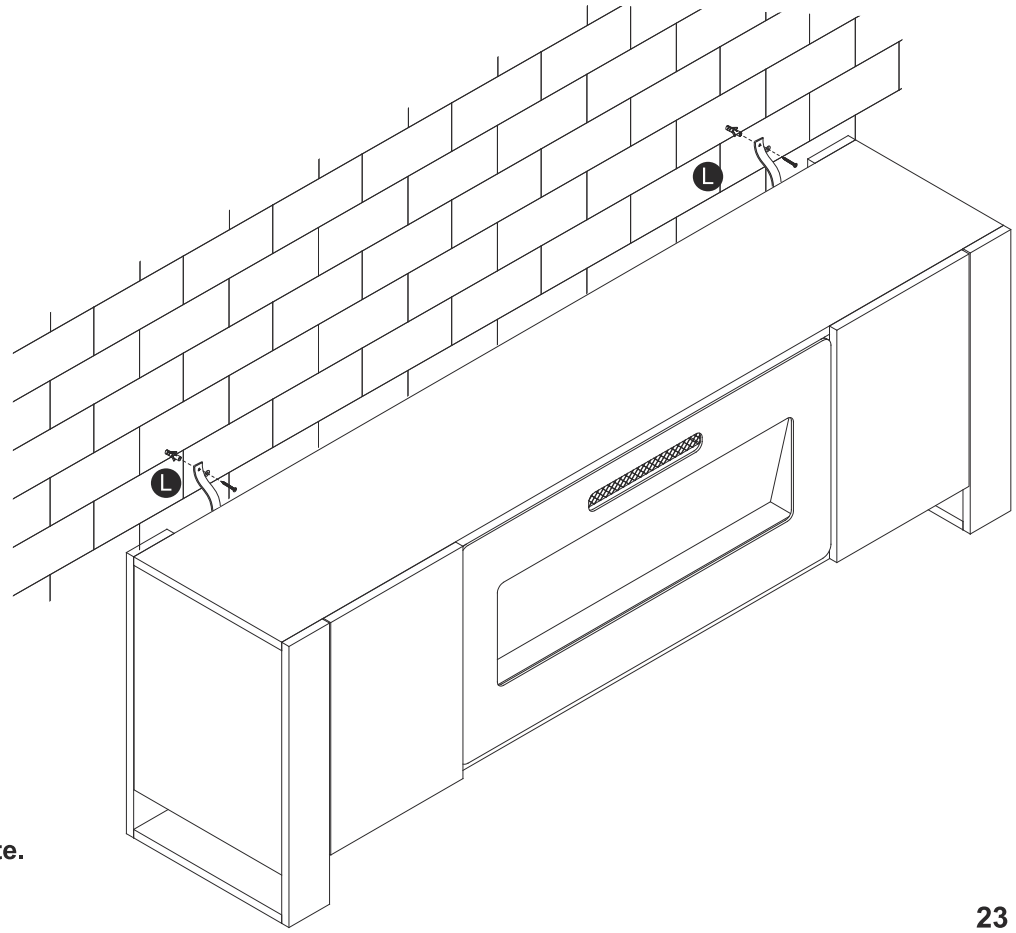

Assembly is complete.

A Guide to Wall Mounting & Fixings

Important note:

If plastic wall plugs (rawl plugs) are supplied with your product, e.g.:

- these are only suitable for use in masonry walls.

If you are in any doubt about the correct wall plugs for your wall, seek professional advice.

Failure of the product due to using the incorrect fixings is the responsibility of the installer.

Important: when drilling into walls always check that there are no hidden wires or pipes etc.

Make sure that the screws and wall plugs being used are suitable for **supporting your unit. Consult a qualified tradesperson if you** are unsure.

Hints:

1: General rule: always use a larger screw and wall plug if you are not sure.
2: Ensure you use the recommended drill bit to match the wall plug and hole size.
3: Ensure you drill the hole horizontally; do not force the drill or enlarge the hole.
4: Take extra care when drilling high walls, ceilings and ceramic tiles. Ensure wall plugs are inserted beyond the thickness of the ceramic tiles to avoid the tiles splitting or cracking.
5: Ensure wall plugs are well fitted and are a tight fit in the drilled hole.

Types of walls

You can use one of the following types of wall plug if your walls are made of brick, breeze block, concrete, stone or wood.

No.1 "General Purpose" wall plug

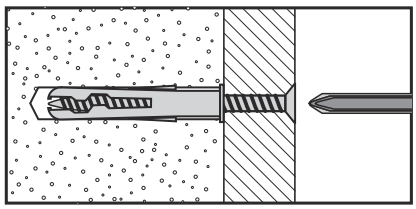

Generally aerated blocks should not be used to support heavy loads, use a specialist fitting in this case. For light loads, general purpose wall plugs can be used.

No.3 "Cavity Fixing" wall plug

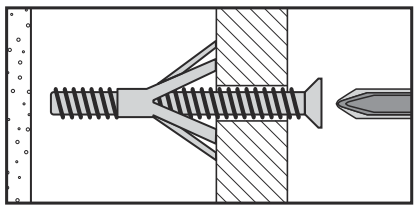

For use with plasterboard partitions or hollow wooden doors.

No.5 "Hammer Fixing" wall plug

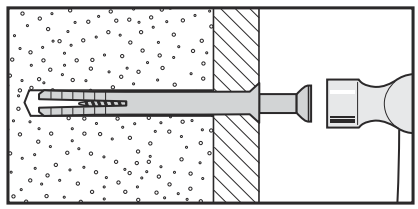

For use with walls stuck with plasterboard. The hammer fixing allows it to be fixed to the wall rather than the plasterboard. Always check the fixing is secure to the retaining wall.

No.2 " Plasterboard" wall plug

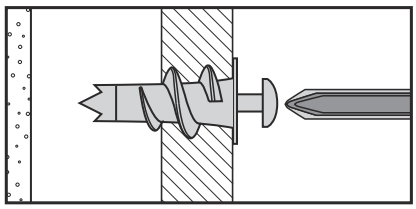

For use when attaching light loads onto plasterboard partitions.

No.4 " Cavity Fixing – Heavy Duty" wall plug

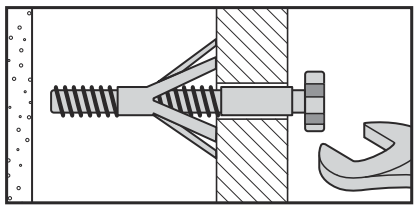

For use when fitting or supporting heavy loads such as shelving, wall cabinets and coat racks.

No.6 " Shield Anchor" wall plug – heavy loads

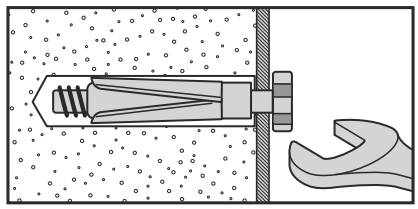

For use with heavier loads such as TV and HiFi speakers and satellite dishes etc.

Care & Maintenance

Safety: always check the fitting and location to ensure your safety in and around the home.

Fitting: from time to time check the fitting to ensure the wall plugs or screws do not become loose.