Assembly Instruction

Please keep properly for future reference.

If you find any missing boxes, damaged parts, or accessory shortages, please contact the customer service team of your purchasing channel immediately. We will resolve the issue as quickly as possible.

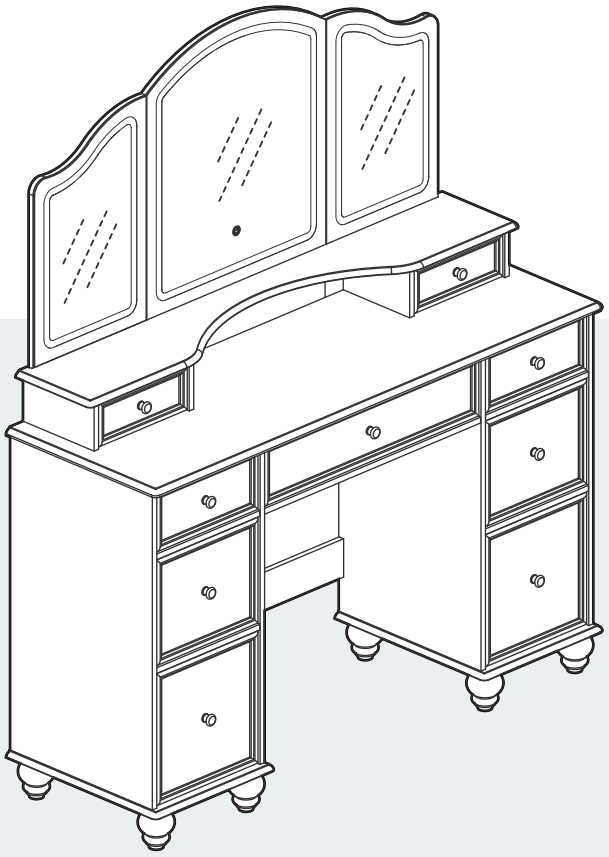

Dimensions

Width-47.2 inch
Depth-15.7 inch
Height-56.2 inch

EN

CONTACT US

- **Email: service@grandtunnel.com**
  In order to receive assistance more quickly, please provide

THE FOLLOWING INFORMATION:

- Order number
- Purchase platform
- Purchase date
- Detailed description of the issue along with photos (if applicable)

Important– Please read these instructions carefully before starting the installation.

Safety and Care Advice

Important – Please read these instructions fully before starting assembly

- Check you have all the components and tools listed on the following pages.
- Remove all fittings from the plastic bags and separate them into their groups.
- Keep children and animals away from the work area, small parts could choke if swallowed.
- Make sure you have enough space to layout the parts before starting.
- During assembly do not stand or put weight on the product, this could cause damage.
- Assemble the item as close to its final position (in the same room) as possible.
- Assemble on a soft level surface to avoid damaging the unit or your floor.
- Parts of the assembly will be easier with 2 people.

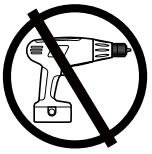

- To reduce the likelihood of damaging your product please ensure that your power drill is set on a low torque setting.

Care and maintenance

- Only clean using a damp cloth and mild detergent, do no use bleach or abrasive cleaners.
- From time to time check that there are no loose screws on this unit.
- This product should not be discarded with household waste. Take to your local authority waste disposal centre.

Handy Hints

- Assemble all parts and bolts loosely during assembly, only once the product is comKlete should you fully tighten the bolts
- Regularly check and ensure that all bolts and fittings are tightend properly.

WARNING
In order to help prevent overturning – please follow these instructions

To help prevent product toppling over please follow the below steps:-

Use the anti tip stap or wall fixing method provided (if applicable)
Do not allow children to climb or hang on the furniture
Do not open more than one drawer at a time
Do not place heavy items in the top drawers
Do not place heavy items on top of the furniture, unless the furniture has been designed for this purpose

Please note that only the anti tip strap is provided.
You will need to provide wall plugs and screws applicable for your wall type

Safety Instructions / Warnings

Please read and follow all instructions carefully before installation and use.

- **WARNING: Risk of electric shock – Do not open or disassemble electrical parts.**
- Use only the power cord specifically provided for this product.Adaptor Input:100-240V~, 50/60Hz, 0.5A, 30W. Output:DC 12V, 2.0A.
- Do not use with damaged power cords or plugs.
- Keep power cables away from moving or sharp parts of the furniture.
- Do not use extension cords or power strips unless specifically approved for the load.
- This product is **not a toy**. Do not allow children to play with electrical components or moving parts.
- Children under 8 years old must be kept away from the furniture unless continuously supervised.
- Keep remote controls, control switches, and ports **out of children's reach**.
- Always **disconnect the product from power** before cleaning, maintenance, or relocation.
- Do not attempt to open, modify, or repair electrical components.
- **Repairs must be performed by qualified professionals only.**
- Do not insert any foreign objects into openings or mechanisms.
- Clean with a dry cloth or a slightly damp soft cloth. Do not use solvents.
- This product is intended for **indoor use only** in dry environments.
- Do not expose the furniture to moisture, liquids, or direct sunlight.
- Ensure stability and clearance around any moving parts (e.g., lift mechanisms, recliners).
- Do not overload power outlets or USB ports beyond the specified ratings.

FCC Information

CAUTION: Changes or modifications not expressly approved by the party responsible for compliance could void the user's authority to operate the equipment!

This device complies with Part 15 of the FCC Rules. Operation is subject to the following two conditions:
1. This product may cause harmful interference.
2. This product must accept any interference received, including interference that may cause undesired operation.

WARNING: Changes or modifications to this product not expressly approved by the party.responsible for compliance could void the user's authority to operate the product.

Note: This product has been tested and found to comply with the limits for a Class B digital device pursuant to Part 15 of the FCC Rules, These limits are designed to provide reasonable protection against harmful interference in a residential installation.
This product generates, uses and can radiate radio frequency energy, and if not installed and used in accordance with the instructions, may cause harmful interference to radio communications. However, there is no guarantee that interference will not occur in a particular installation. If this product does cause harmful interference to radio or television reception,which can be determined by turning the product off and on, the user is encouraged to try to correct the interference by one or more of the following measures.
· Reorient or relocate the receiving antenna.
· Increase the distance between the product and receiver.
· Connect the product to an outlet on a circuit different from that to which the receiver is connected.
· Consult the dealer or an experienced radio/TV technician for assistance.

CUSTOMER SERVICE GUIDE

Thank you for choosing our product! We are committed to providing you with excellent service. If you find any missing parts, damaged packaging, or product damage after receiving all packages, please follow the steps below to quickly contact our customer service team. We will do our best to resolve your issue.

1. Missing Parts

Verify Parts:

1. Refer to the “Parts List” in the manual to verify the name, specifications, and quantity of the missing parts.
2. Take a clear photo of the parts list and mark the missing parts with detailed information, e.g., “Missing 5 pieces of M6x30mm screws.”

Contact Us:

· By Email:
Send an email to service@grandtunnel.com, with the subject line “Missing Parts Issue.” Include the following in the email:
· A description of the missing parts and a photo of the parts list.
· Order details (order number, purchase platform, purchase date).

2. Product or Packaging Damage

If it affects normal use:

Steps:

1. Take clear photos or videos showing the damaged parts and the extent of the damage (multi-angle shots are recommended).
2. Email the photos/videos along with other details to service@grandtunnel.com, with the subject line “Product Damage Issue.”

Resolution:

After verification, we will arrange for a replacement part, product exchange, or refund as quickly as possible.

If it does not affect normal use:

Steps:

1. Contact our customer service team (by email: service@grandtunnel.com).
2. Provide a description of the damage and include relevant photos or videos.

Resolution:

We will provide repair guidance or an appropriate compensation plan based on the specific situation.

Contact Us:

· Customer Service Email: service@grandtunnel.com

Helpful Tips

To process your issue efficiently, please prepare the following information:
· Order details (order number, purchase platform, purchase date).
· Clear photos or videos.
· We are committed to providing quick and professional solutions, no matter the size of the issue, to ensure your satisfaction.
Thank you for your trust and support! We hope you enjoy using our product!

Parts List - Panels

Please check you have all the panels listed below

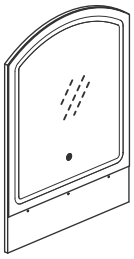

1 (660x480x16mm x1)

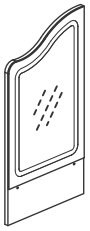

2 (580x300x16mm x1)

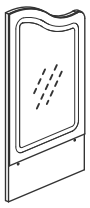

3 (580x300x16mm x1)

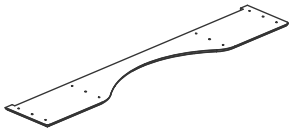

4 (1150x200x12mm x1)

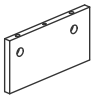

5 (190x98x12mm x2)



6 (177x98x12mm x2)

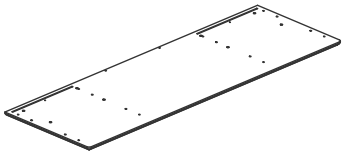

7 (1200x400x15mm x1)

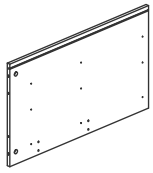

8 (659x380x12mm x1)

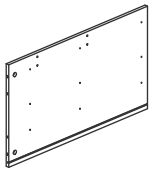

10 (659x380x12mm x1)

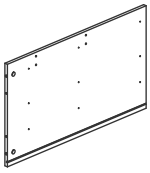

11 (659x380x12mm x1)

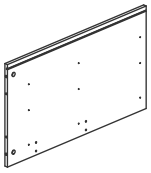

12 (659x380x12mm x1)

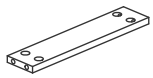

13 (276x60x12mm x4)

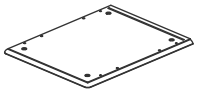

14 (322x400x12mm x2)

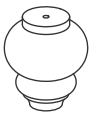

15 (Ø70x80mm x8)

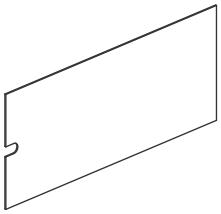

16 (667x284x3mm x2)

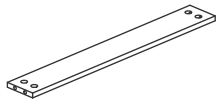

17 (578x80x12mm x2)

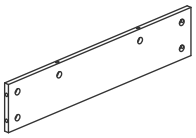

18 (578x119x12mm x1)

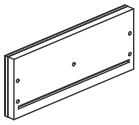

19 (237x93x21mm x2)

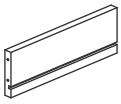

20 (210x70x12mm x2)



21 (156x70x12mm x2)

Parts List - Panels

Please check you have all the panels listed below



22 (156x70x12mm x2)

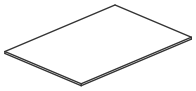

23 (218x151x3mm x2)

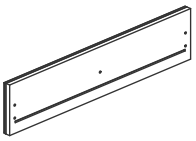

24 (573x125x21mm x1)

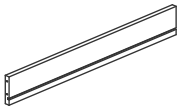

25 (529x70x12mm x1)



26 (300x70x12mm x3)



27 (300x70x12mm x3)

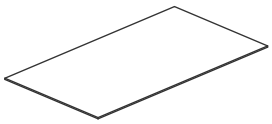

28 (295x537x3mm x1)

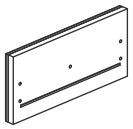

29 (271x125x21mm x2)

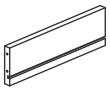

30 (227x70x12mm x2)

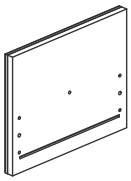

31 (271x220x21mm x2)

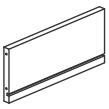

32 (227x100x12mm x2)

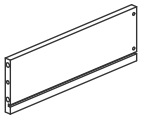

33 (300x100x12mm x2)

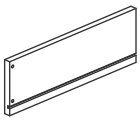

34 (300x100x12mm x2)

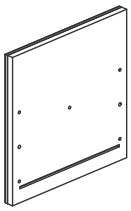

35 (271x275x21mm x2)

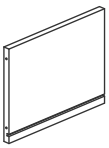

36 (227x175x12mm x2)

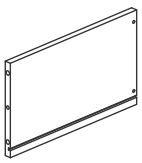

37 (300x175x12mm x2)

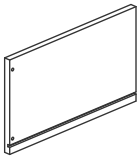

38 (300x175x12mm x2)

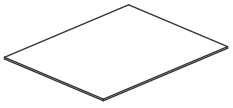

39 (295x235x3mm x6)

Parts List - Fittings

Please check you have all the fittings listed below

Note: The quantities below are the correct amount to complete the assembly. In some cases more fittings may be supplied are required.

A  6*30mm Wooden Dowel x 38	**B** 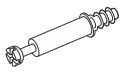 6*35mm Cam Bolt x 89	**C**  Cam Lock x 89
D 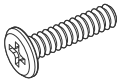 6*25mm Bolt x 8	**E**  x 4  3*12mm	**F** 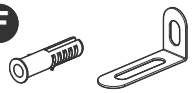 x 2 4*40mm 4*12mm
G  x 1	**H**  3.5*12mm Screw x 84	**I**  x 9
J  4*18mm Bolt x 9	**K**  x 12  3*16mm	**L**  4*35mm Screw x 43
M  4*40mm Screw x 16	**N**  x 4 150*10*2mm	**O**  x 8 Ø25*2mm
P 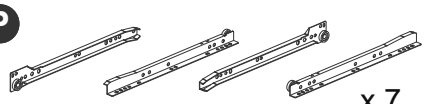 x 7 = CL 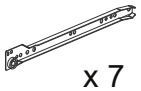 x 7 + DL 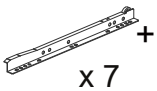 x 7 + CR 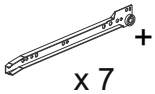 x 7 + DR 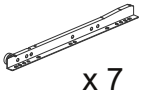 x 7 300mm		

Tools required

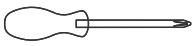

Phllips screwdriver
(medium & large)

Ruler - Use this ruler to help correctly identify the screws

mm

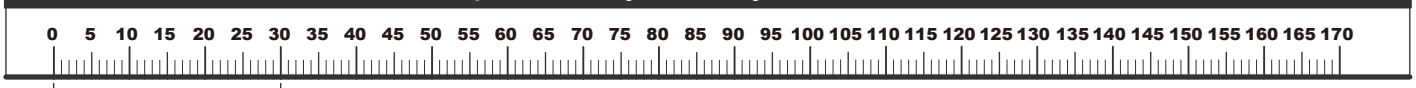

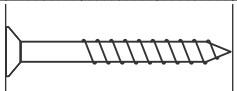

The screws length is measured from the head to the point (30mm screw shown).



inch

Assembly Instructions

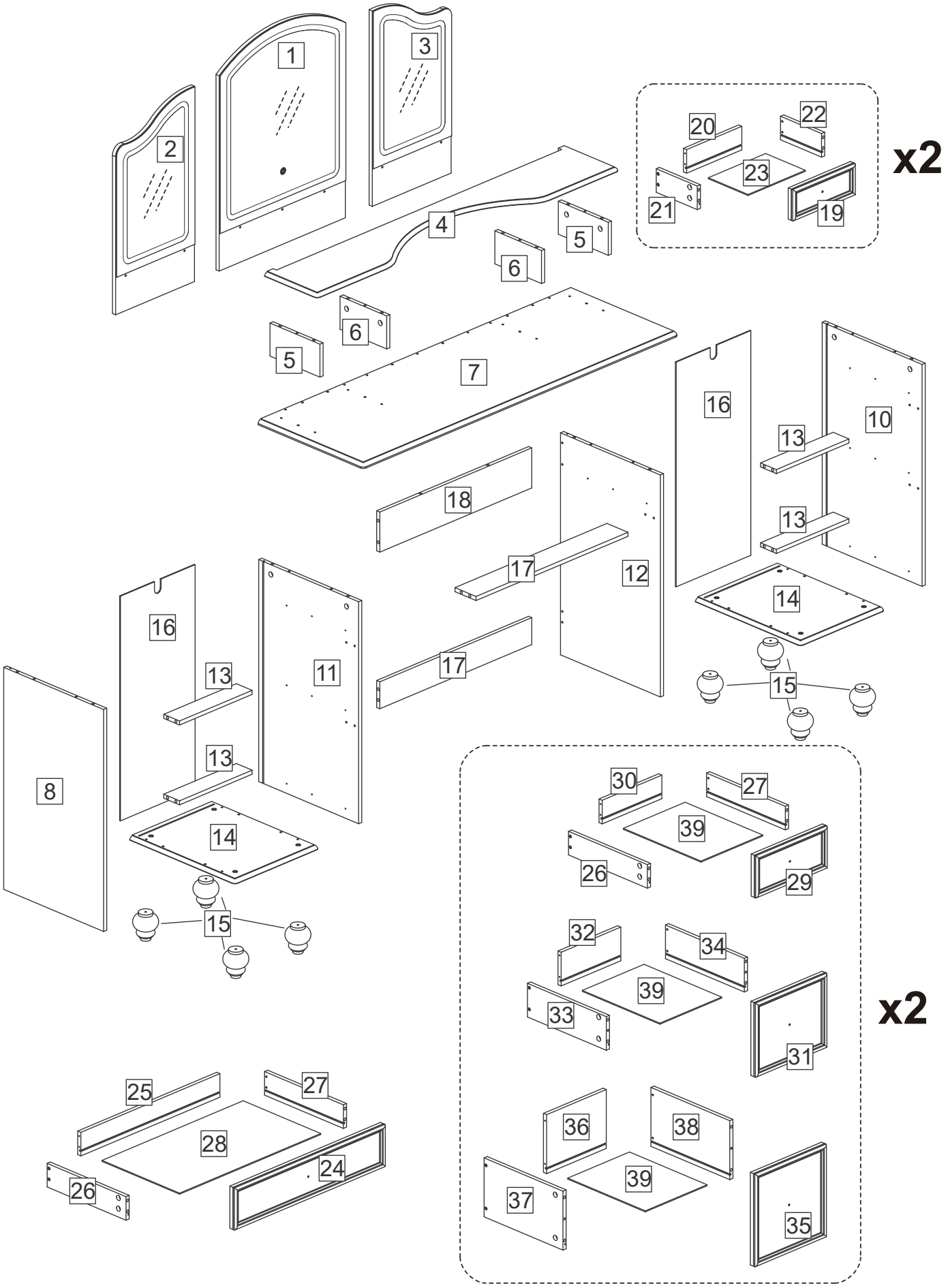

Assembly Instructions

Step 1

CAM-LOCK
Tighten until shoulder is flush with panel.Do not overtighten or undertighten(see example below)

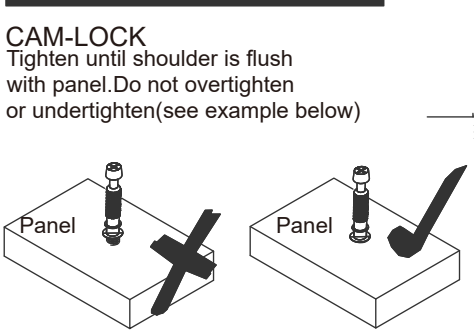

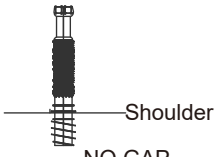

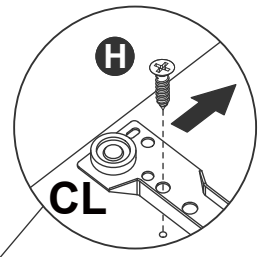

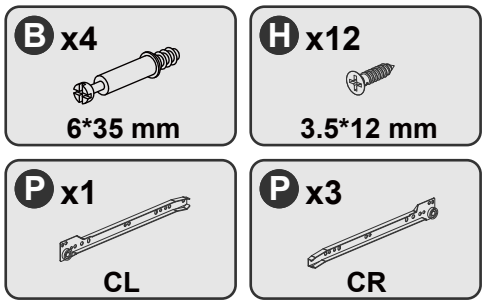

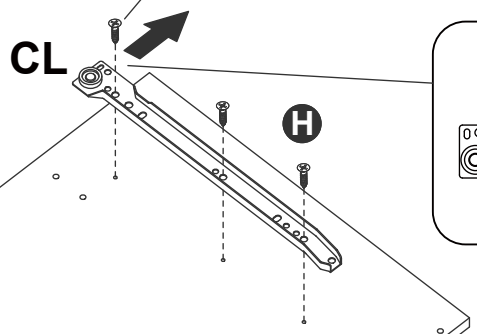

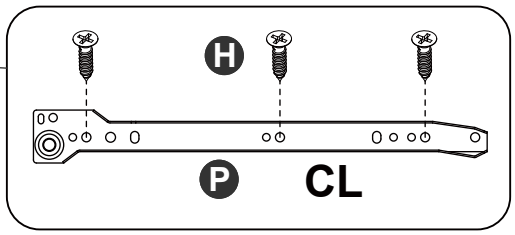

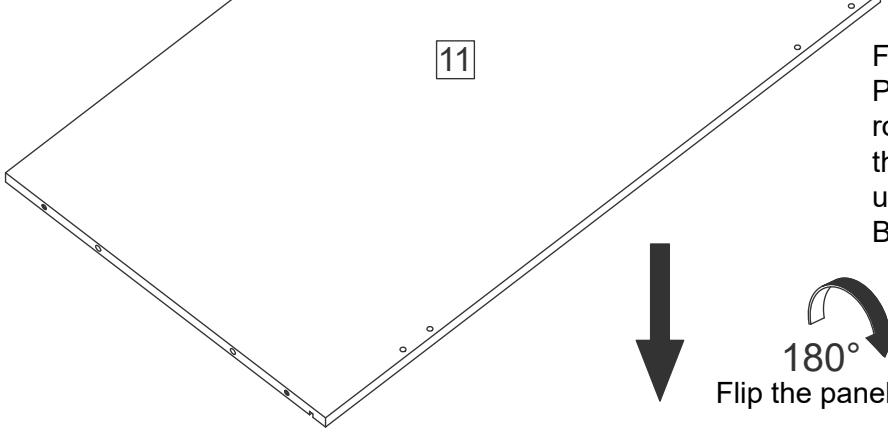

First, attach the Slide Rail (CL) to Panel (11) using screws (H). Then, rotate Panel (11) 180 degrees, attach the Slide Rail (CR) to Panel (11) using screws (H), and install the Cam Bolts (B) onto Panel (11).

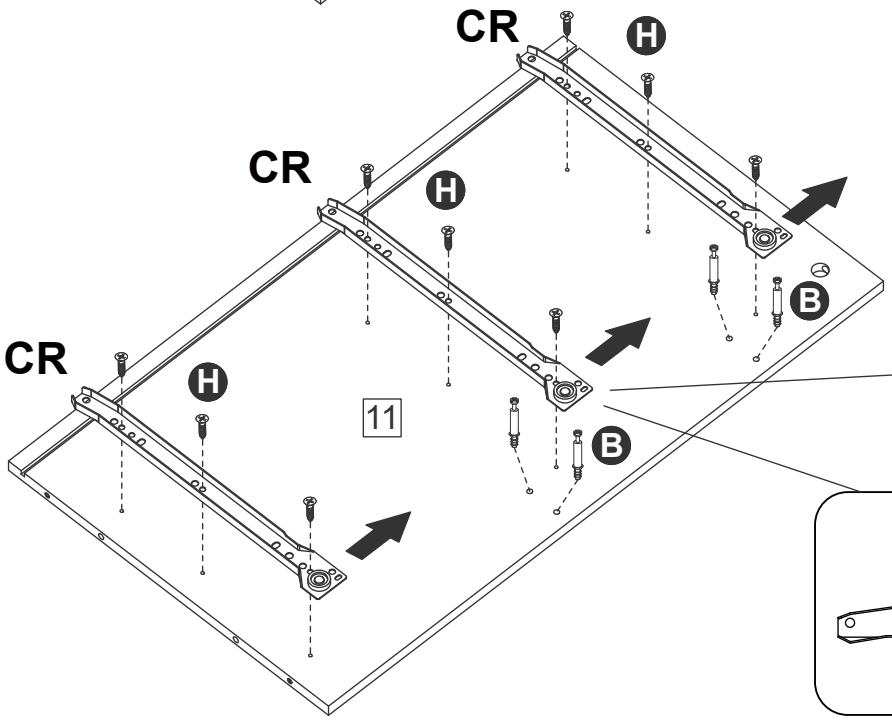

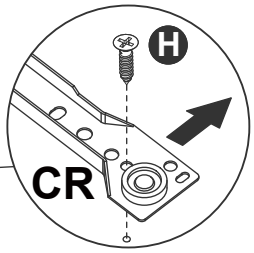

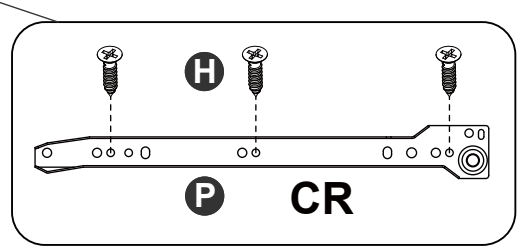

Assembly Instructions

Step 2

CAM-LOCK
Tighten until shoulder is flush with panel.Do not overtighten or undertighten(see example below)

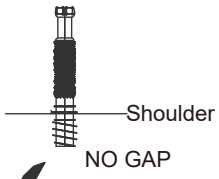

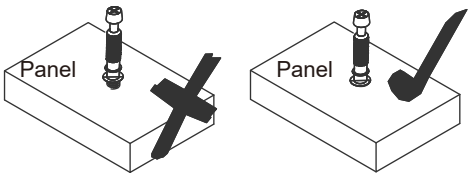

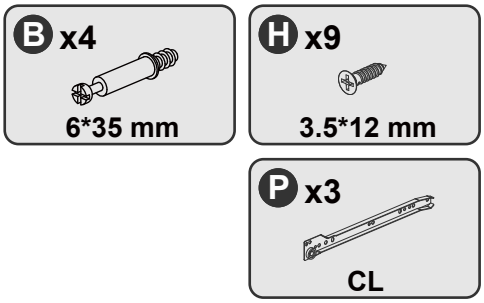

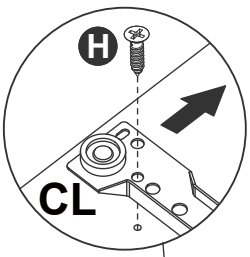

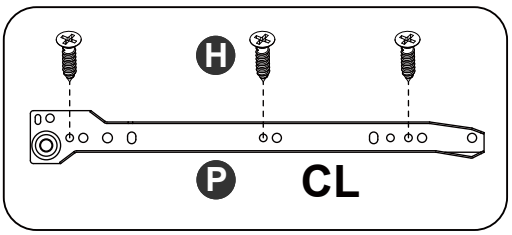

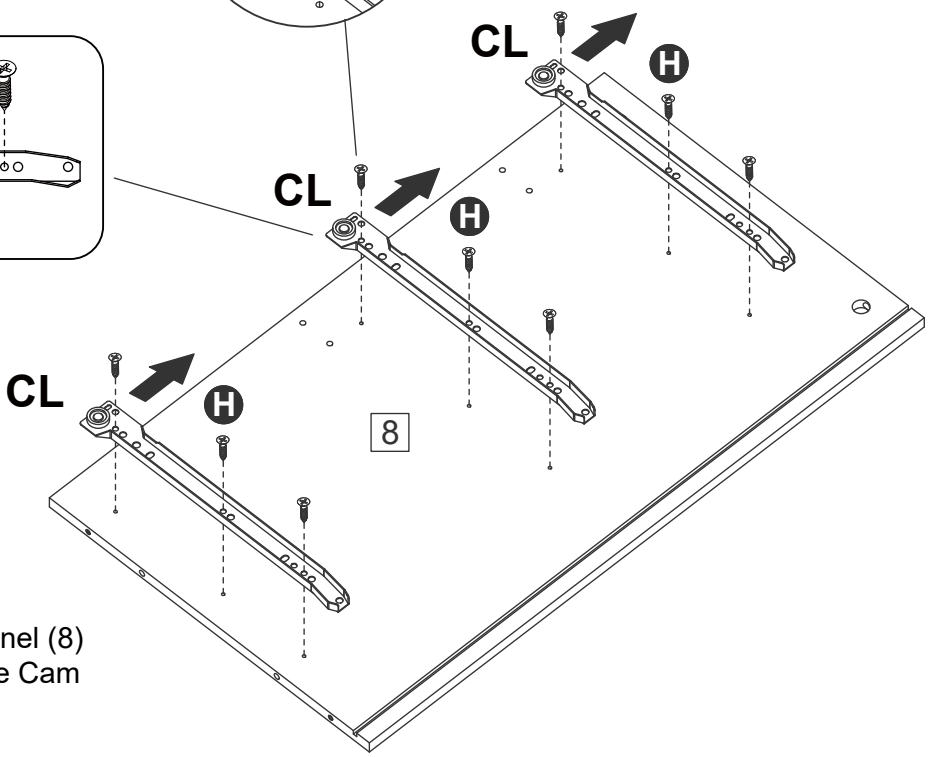

Attach the Slide Rail (CL) to Panel (8) using screws (H), and install the Cam Bolts (B) onto Panel (8).

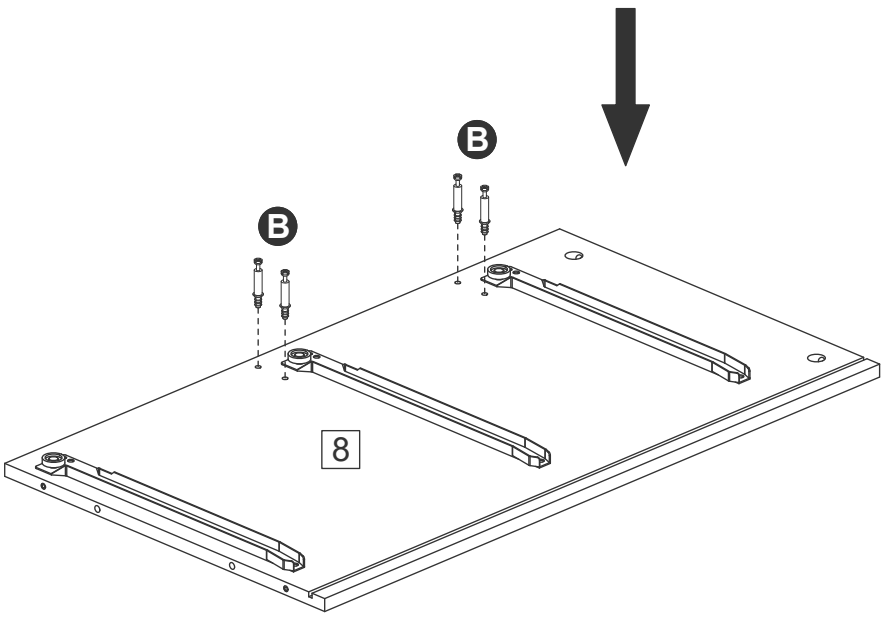

Assembly Instructions

Step 3

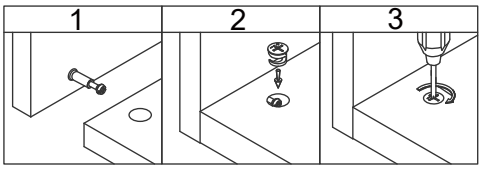

Attach Panel (13) to Panel (8), insert the Cam Locks (C), and tighten them.

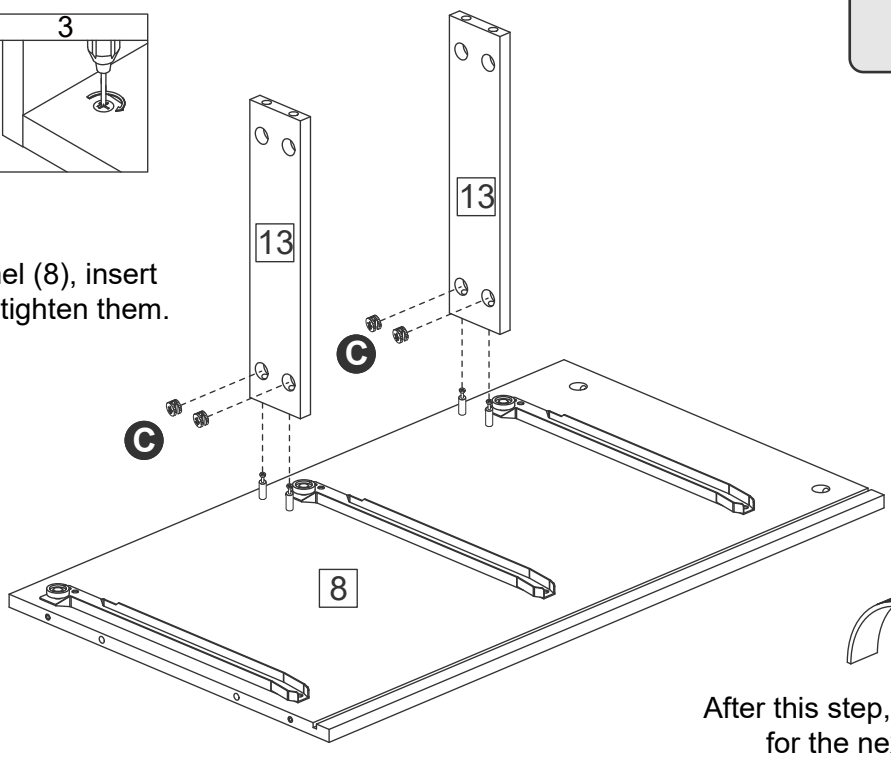

C x4



After this step, rotate the frame for the next operation

Step 4

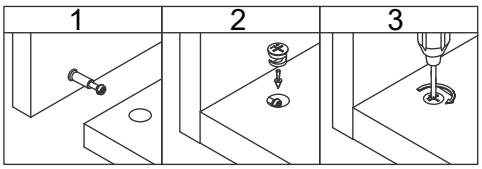



Attach Panel (11) to Panel (13), insert the Cam Locks (C), and tighten them.

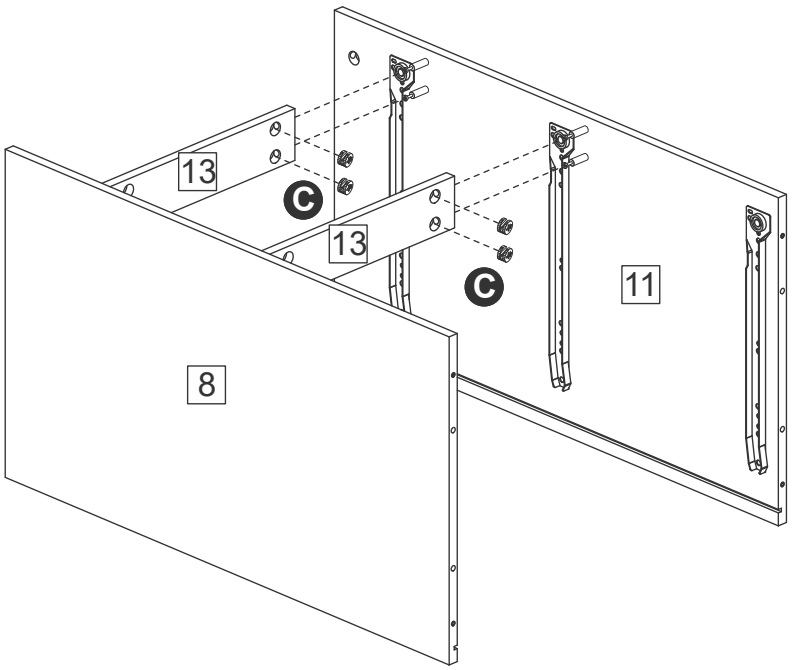

C x4

Assembly Instructions

Step 5

First, insert the Wooden Dowels (A) into Panels (8) and (11). Then, attach Panel (14) to Panels (8) and (11) using screws (M).

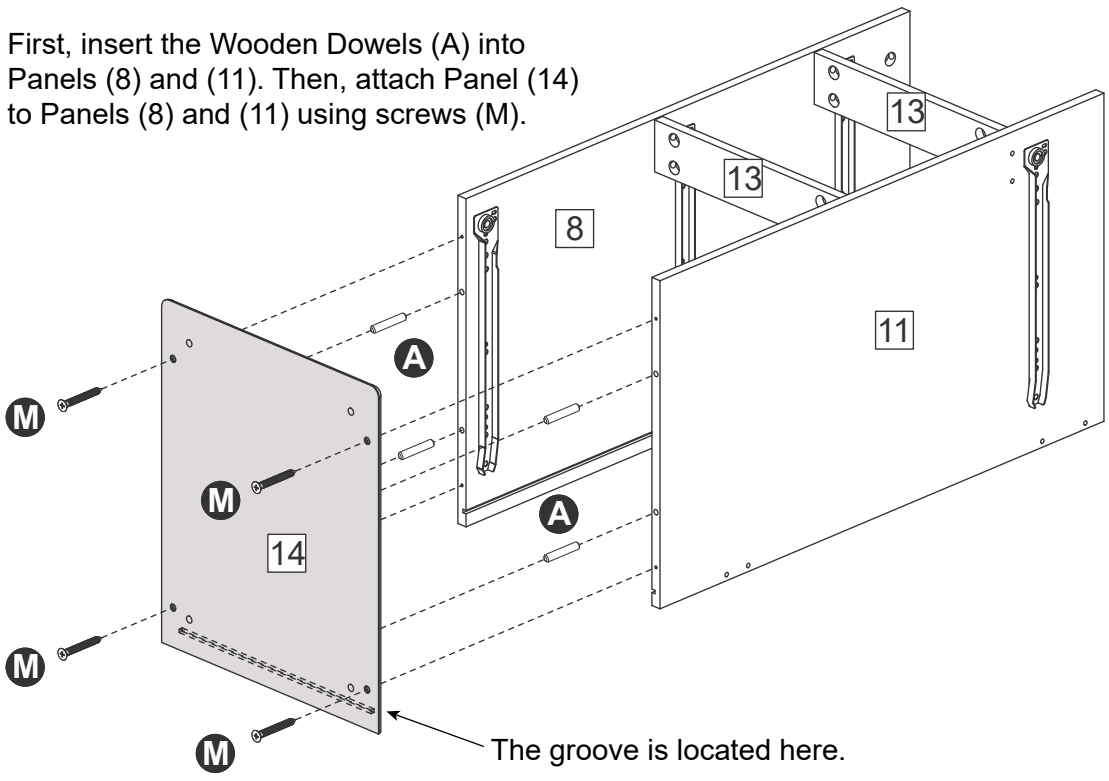

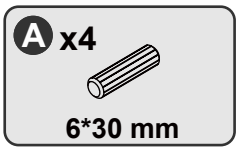

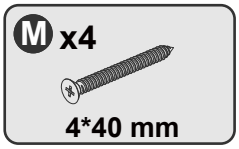

Step 6

First, attach Part (O) to Part (15). Then, attach Part (15) to Panel (14) using Bolts (D).

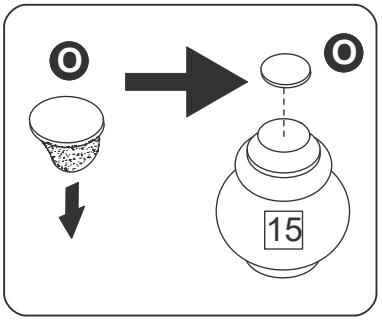

x4

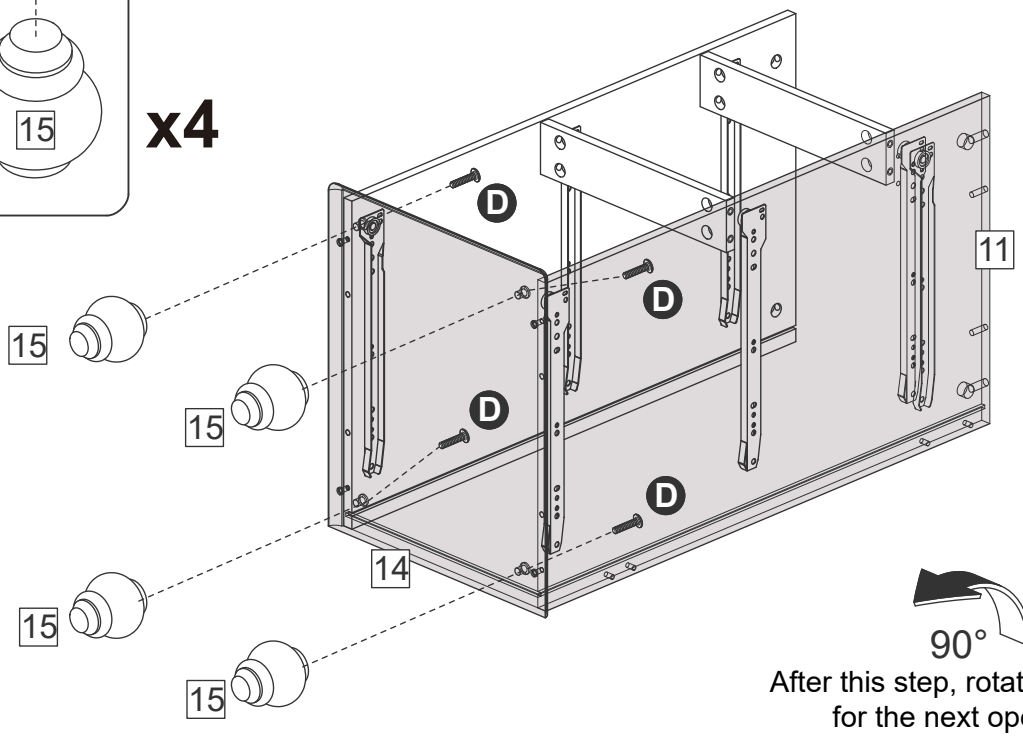

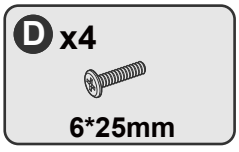

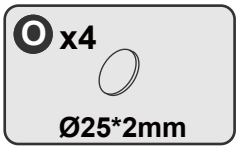

After this step, rotate the frame for the next operation

Assembly Instructions

Step 7

CAM-LOCK
Tighten until shoulder is flush with panel.Do not overtighten or undertighten(see example below)

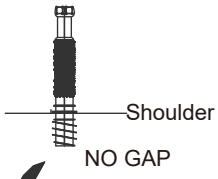

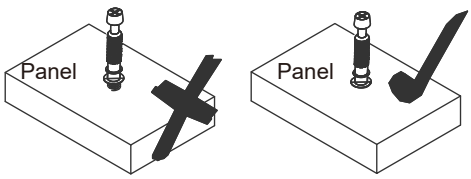

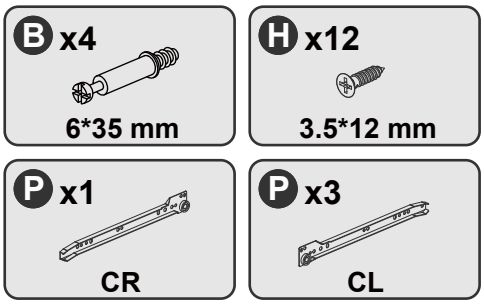

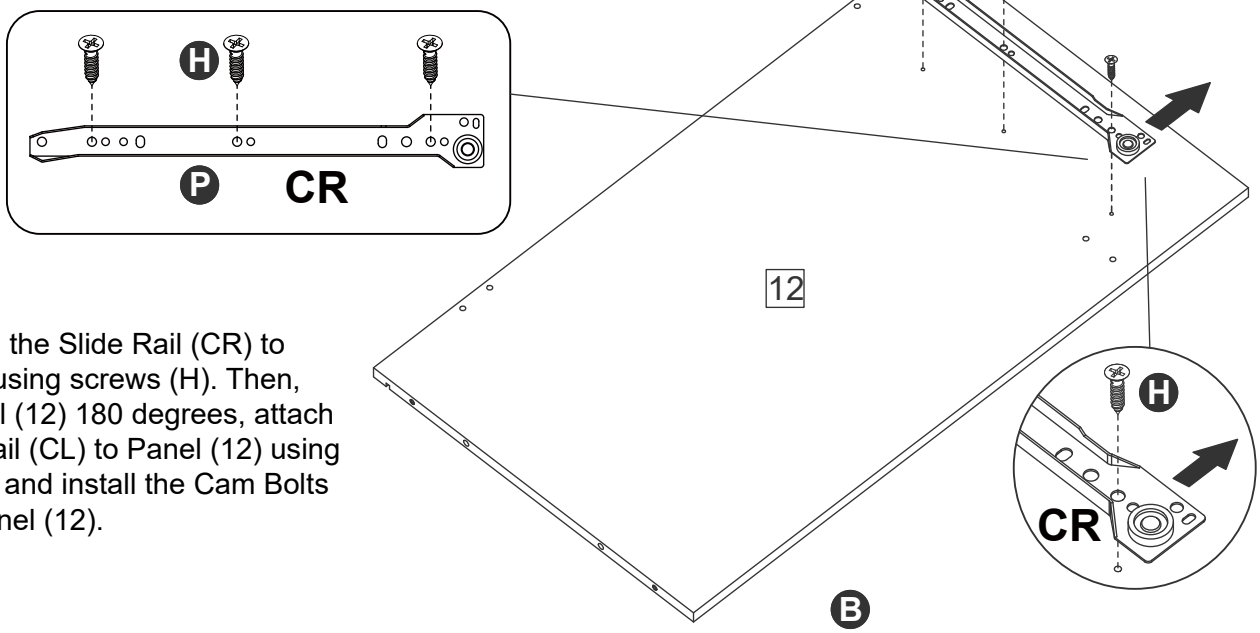

First, attach the Slide Rail (CR) to Panel (12) using screws (H). Then, rotate Panel (12) 180 degrees, attach the Slide Rail (CL) to Panel (12) using screws (H), and install the Cam Bolts (B) onto Panel (12).

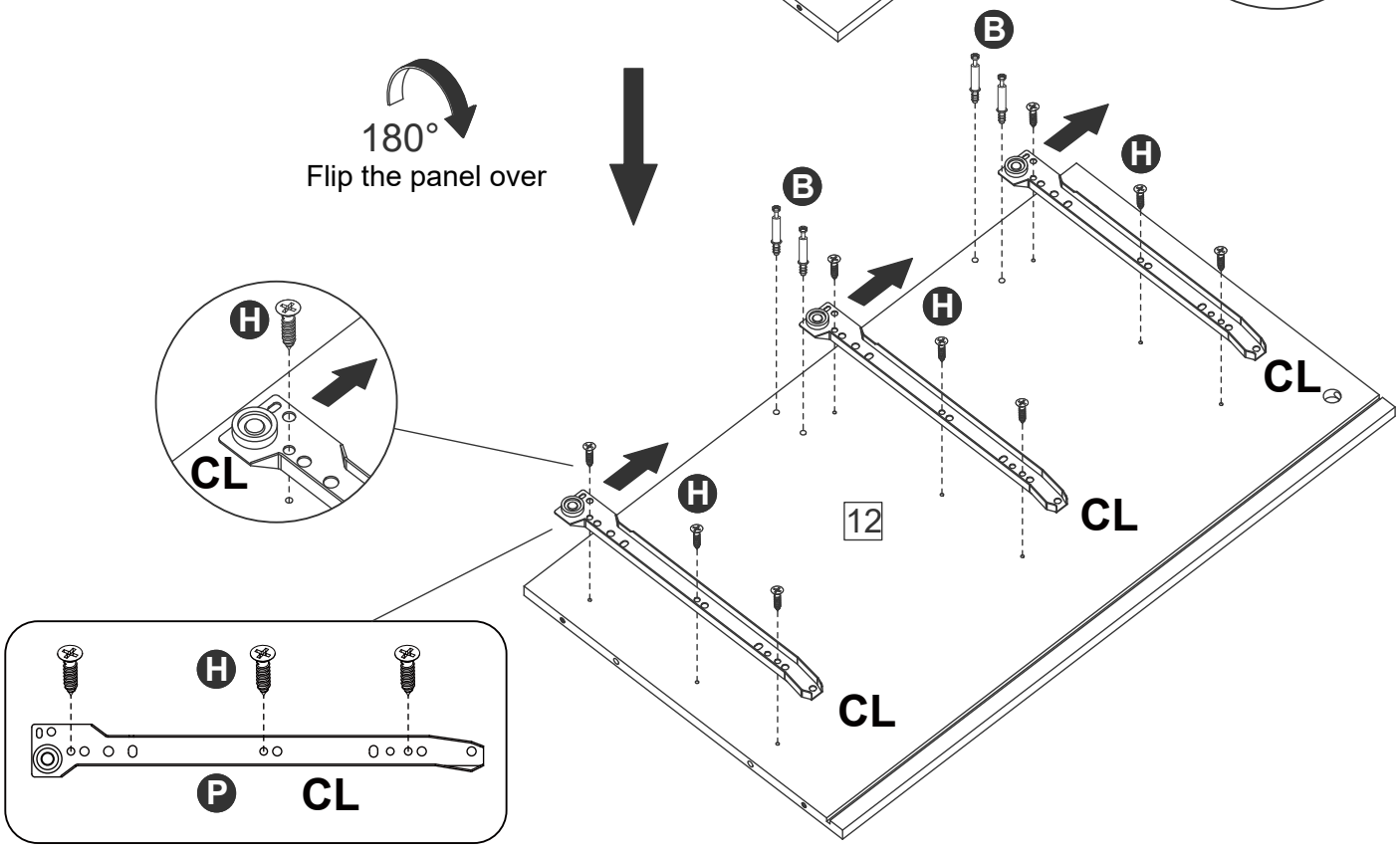

Assembly Instructions

Step 8

CAM-LOCK
Tighten until shoulder is flush with panel.Do not overtighten or undertighten(see example below)

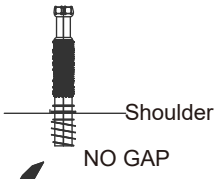

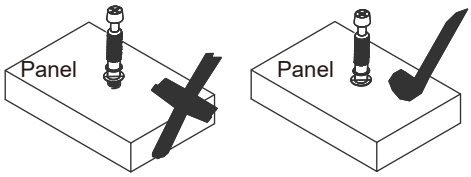

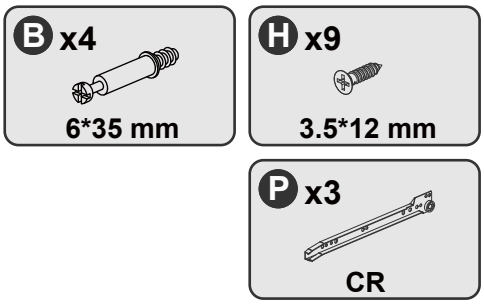

Attach the Slide Rail (CR) to Panel (10) using screws (H), and install the Cam Bolts (B) onto Panel (10).

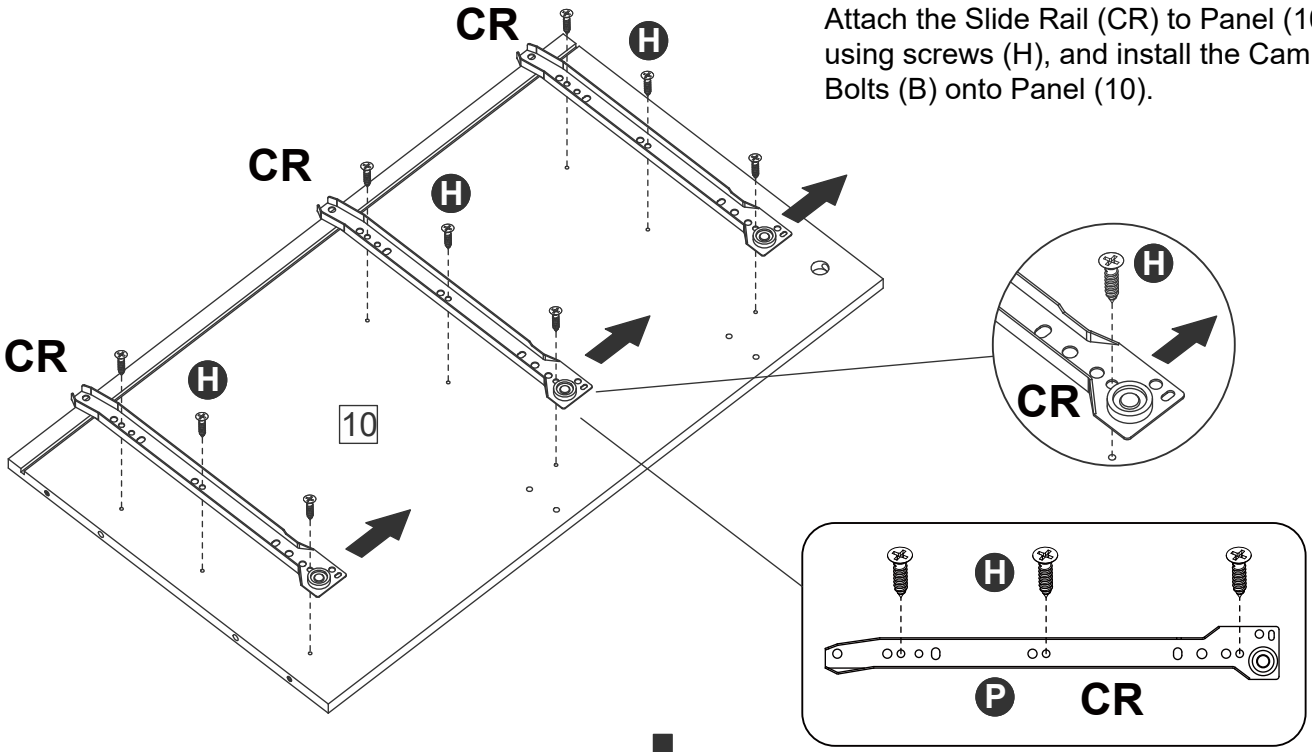

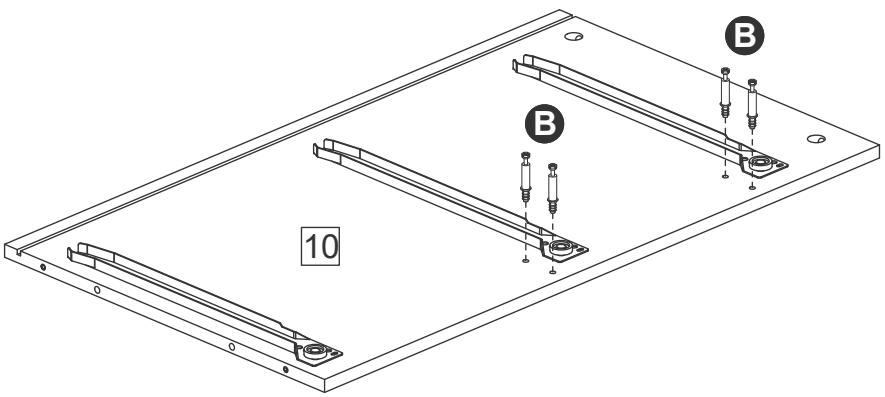

Assembly Instructions

Step 9

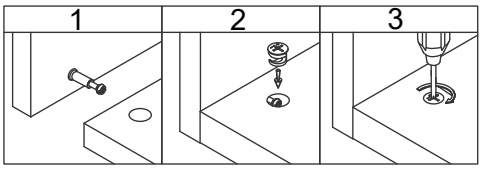

Attach Panel (13) to Panel (10), insert the Cam Locks (C), and tighten them.

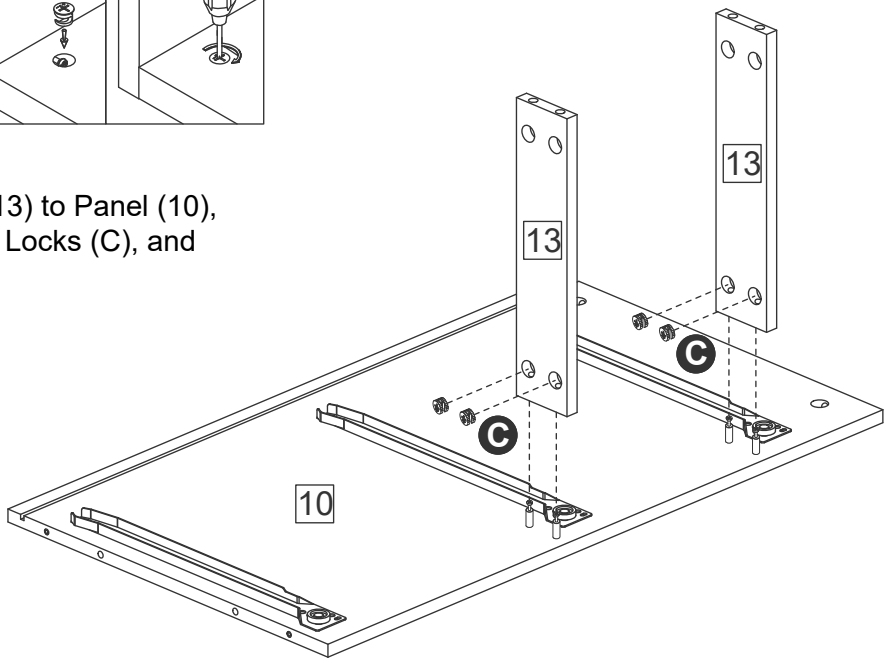

C x4



After this step, rotate the frame for the next operation

Step 10

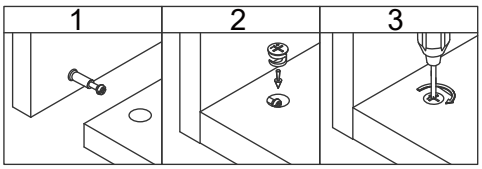



Attach Panel (12) to Panel (13), insert the Cam Locks (C), and tighten them.

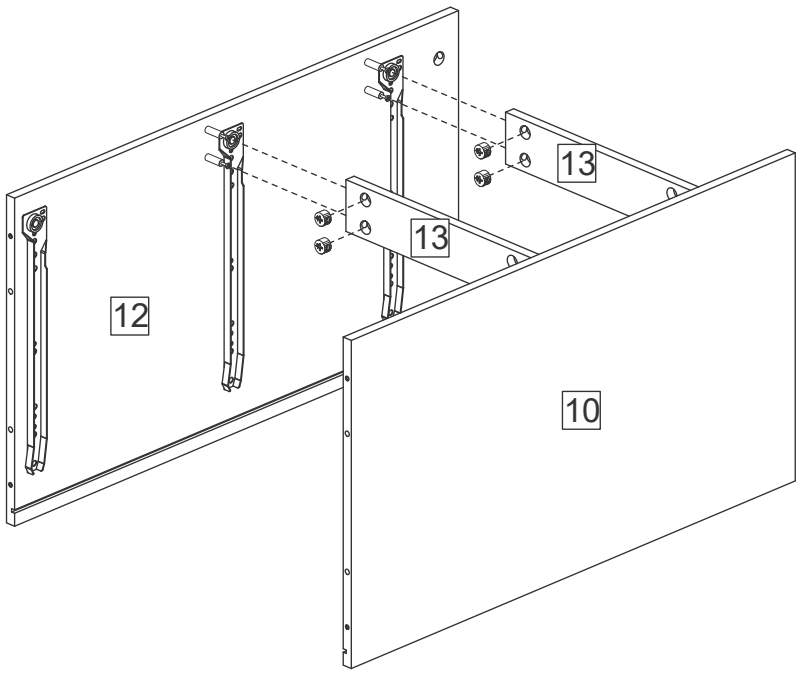

C x4

Assembly Instructions

Step 11

First, insert the Wooden Dowels (A) into Panels (10) and (12). Then, attach Panel (14) to Panels (10) and (12) using screws (M).

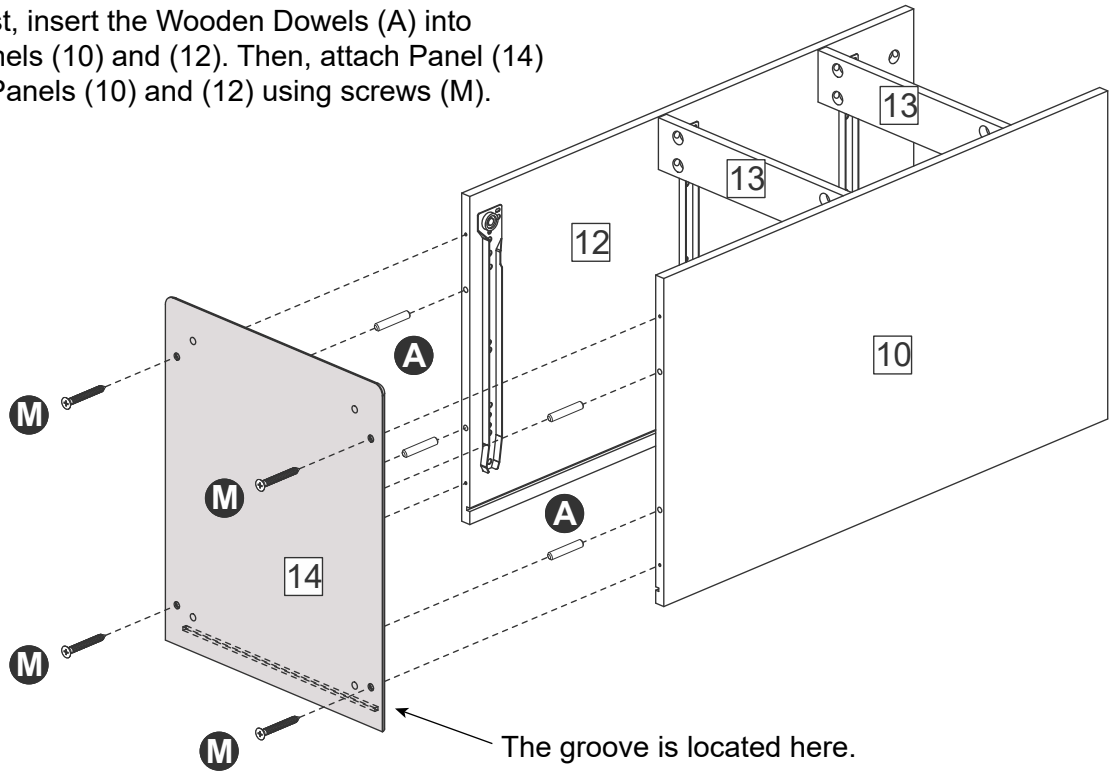

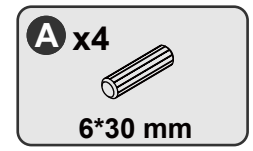

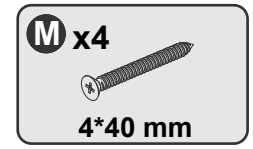

Step 12

First, attach Part (O) to Part (15). Then, attach Part (15) to Panel (14) using Bolts (D).

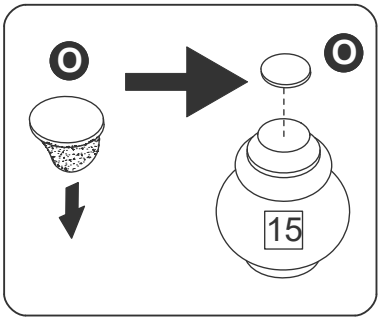

x4

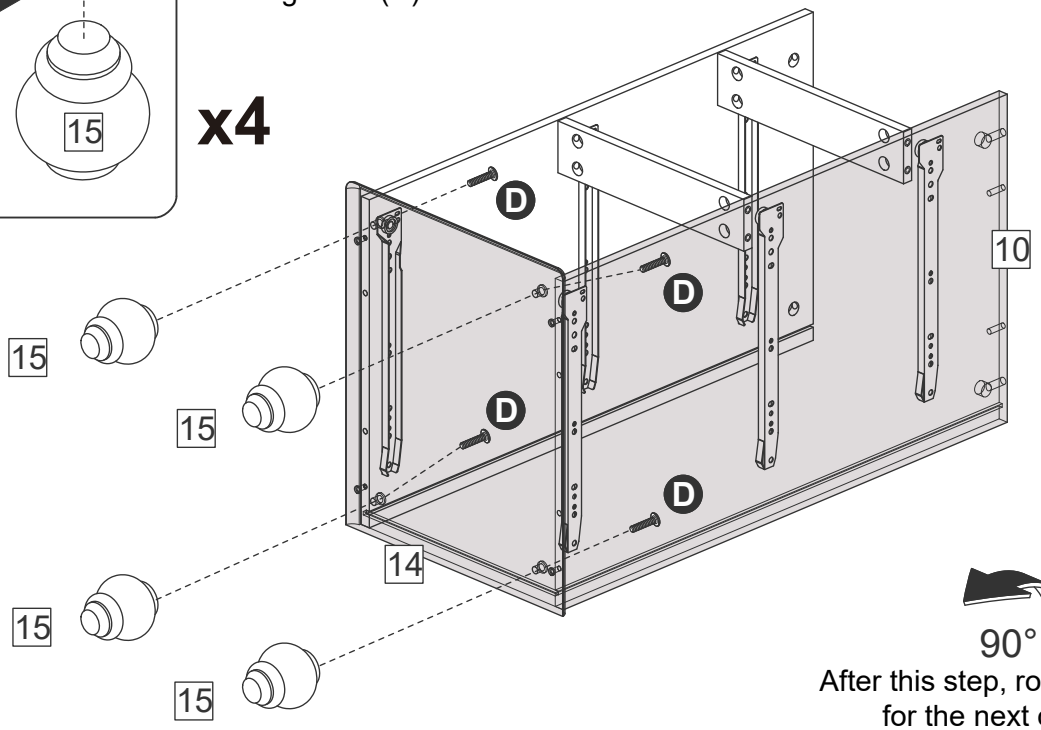

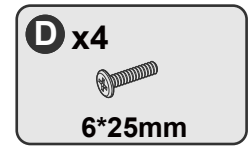

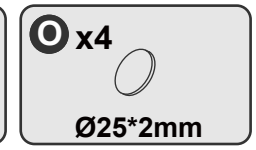

After this step, rotate the frame for the next operation

Assembly Instructions

Step 13

CAM-LOCK
Tighten until shoulder is flush with panel.Do not overtighten or undertighten(see example below)

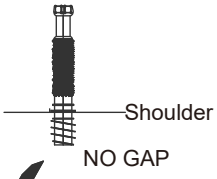

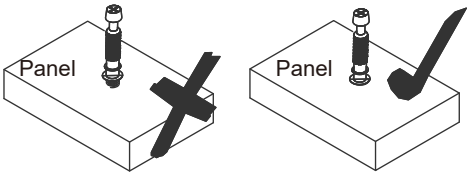

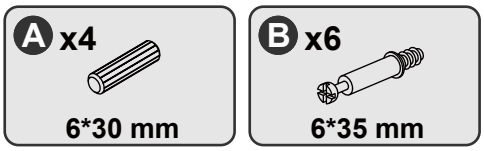

First, insert Panel (16) into the grooves of Panels (10), (12), and (14). Then, insert the Wooden Dowels (A) into Panels (10) and (12), and install the Cam Bolt (B) onto Panel (12).

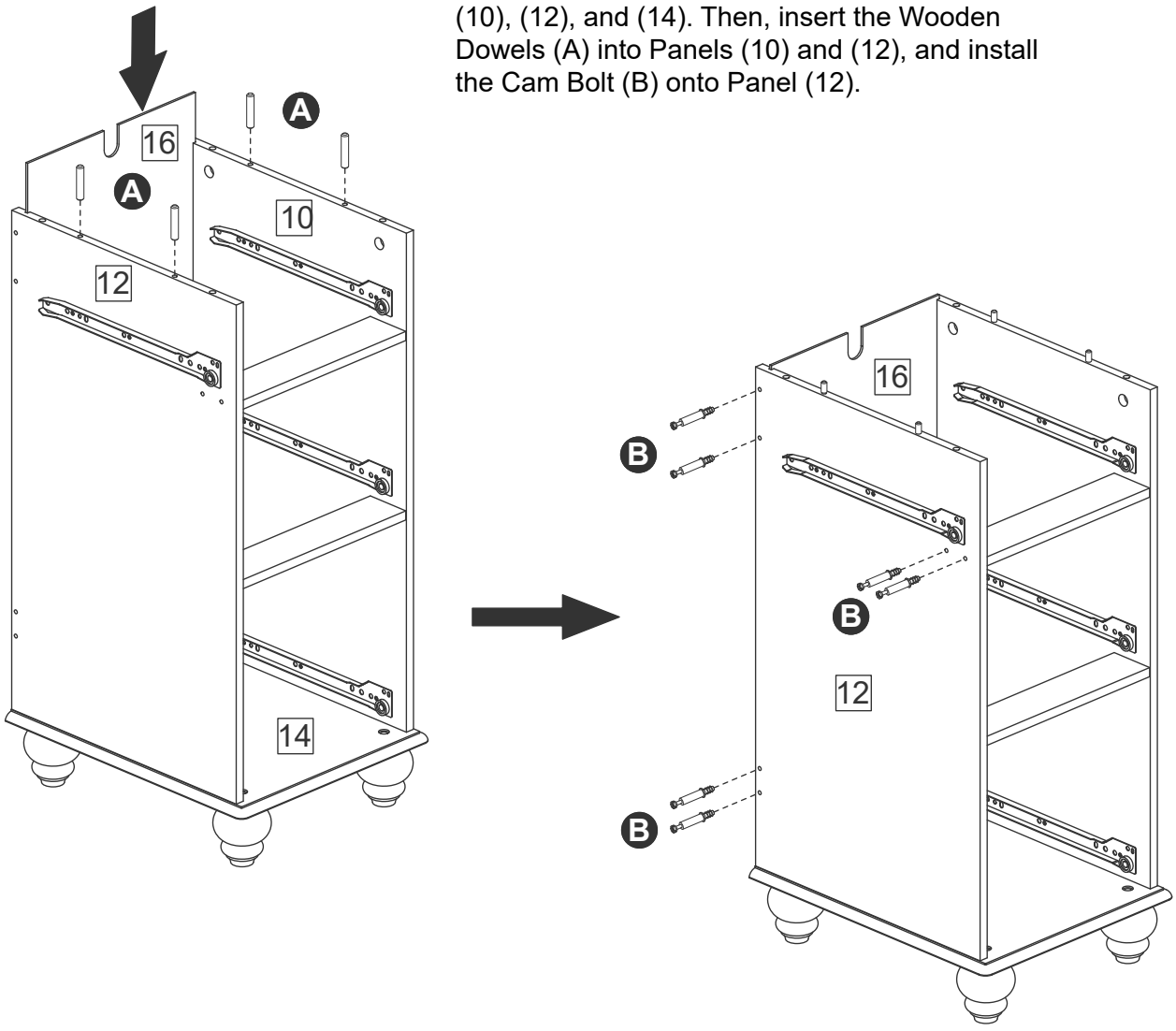

Assembly Instructions

Step 14

CAM-LOCK
Tighten until shoulder is flush with panel.Do not overtighten or undertighten(see example below)

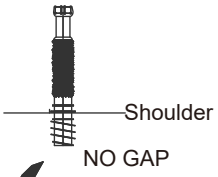

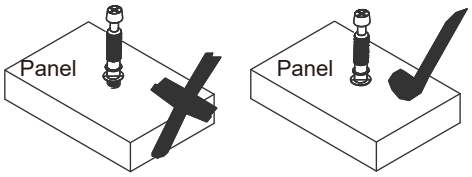

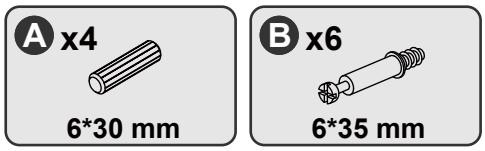

First, insert Panel (16) into the grooves of Panels (8), (11), and (14). Then, insert the Wooden Dowels (A) into Panels (8) and (11), and install the Cam Bolt (B) onto Panel (11).

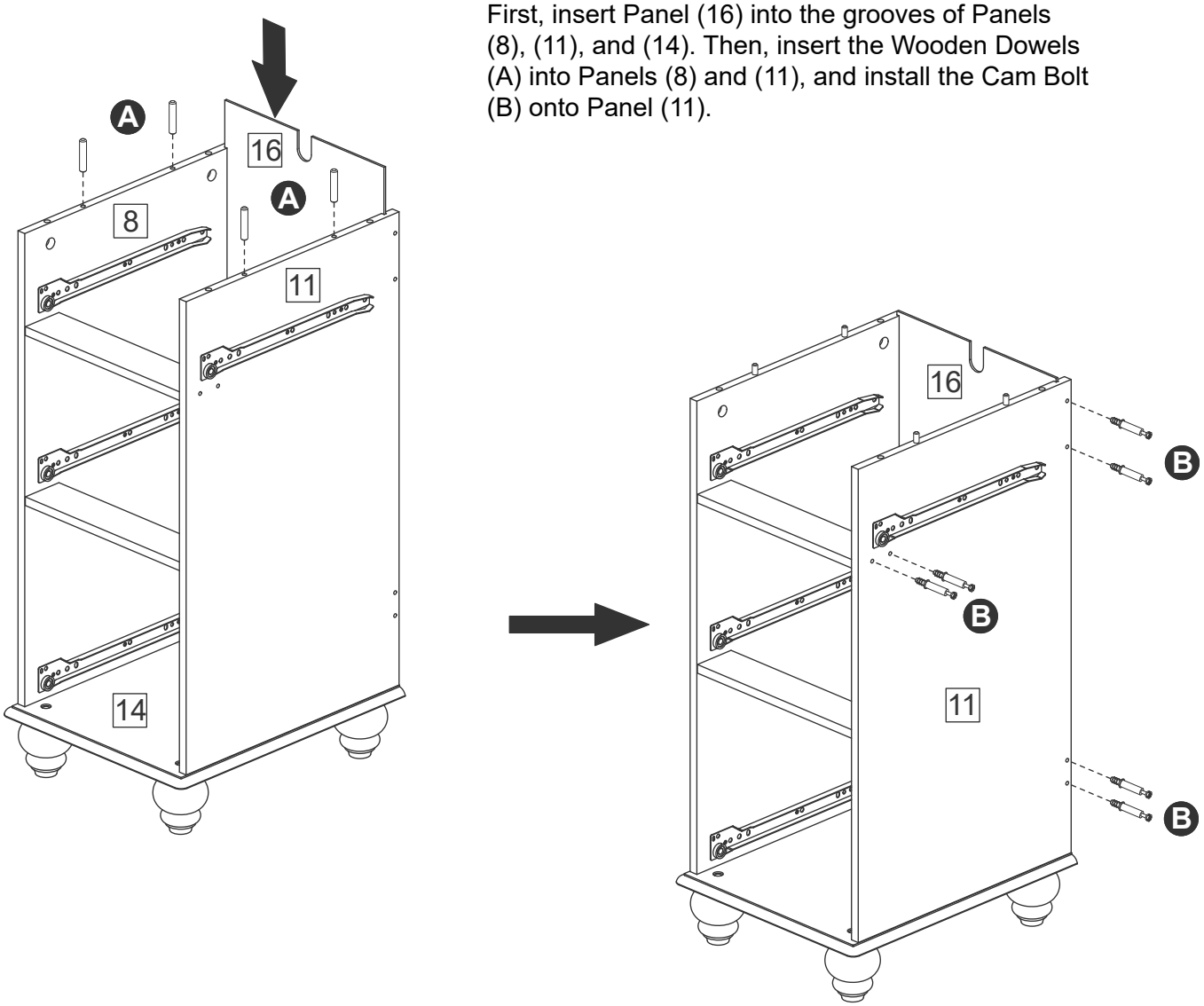

Assembly Instructions

Step 15

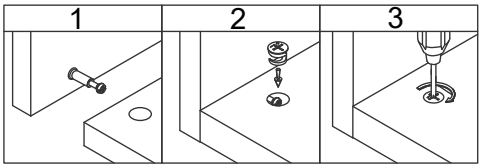



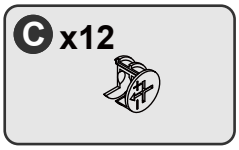

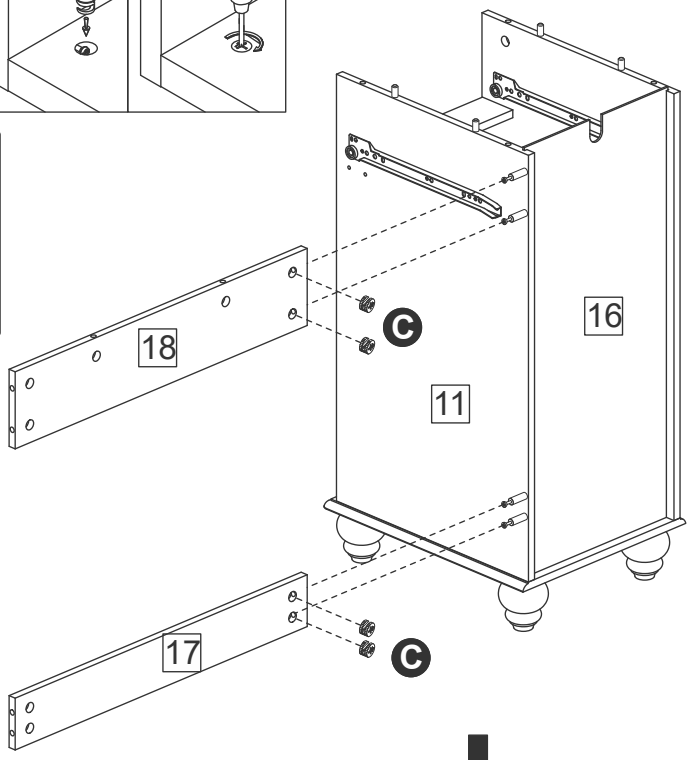

First, attach Panels (17) and (18) to Panel (11), insert the Cam Locks (C), and tighten them. Then, attach Panel (12) to Panels (17) and (18), insert the Cam Locks (C), and tighten them.

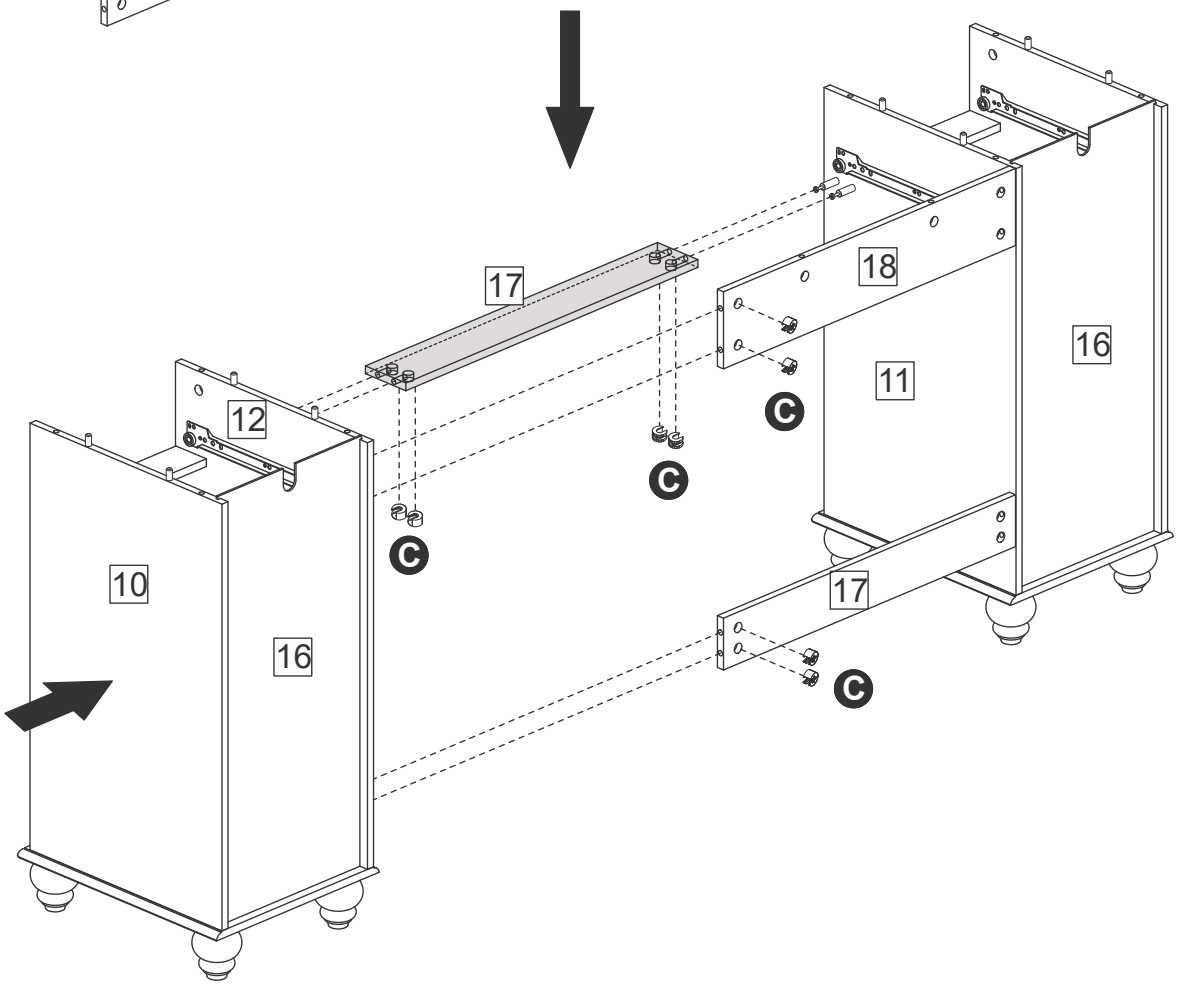

Assembly Instructions

Step 16

CAM-LOCK
Tighten until shoulder is flush with panel.Do not overtighten or undertighten(see example below)

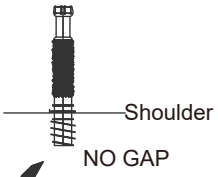

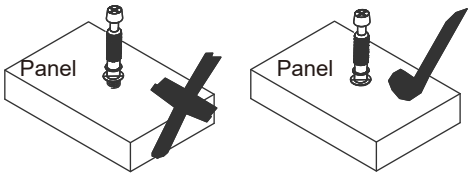

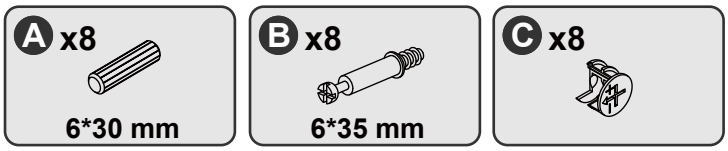

First, install the Cam Bolts (B) onto Panel (4), and insert the Wooden Dowels (A) into Panel (4). Then, attach Panels (5) and (6) to Panel (4), insert the Cam Locks (C), and tighten them. Finally, insert the Wooden Dowels (A) into Panels (5) and (6).

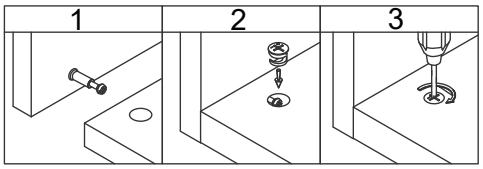



After this step, rotate the frame for the next operation

Assembly Instructions

Step 17

CAM-LOCK
Tighten until shoulder is flush with panel.Do not overtighten or undertighten(see example below)

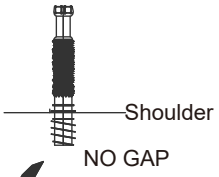

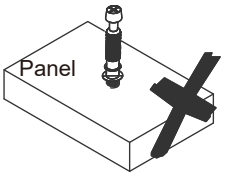

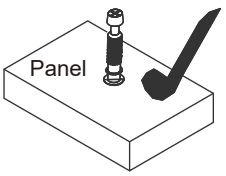



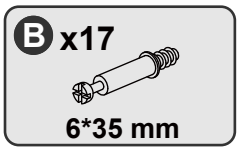

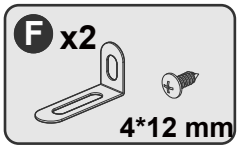

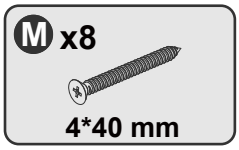

First, install the Cam Bolts (B) and Part (F) onto Panel (7). Then, rotate Panel (7) 180 degrees, install the Cam Bolts (B) onto Panel (7), rotate Panel (7) 90 degrees, and attach Panel (7) to Panels (5) and (6) using screws (M).

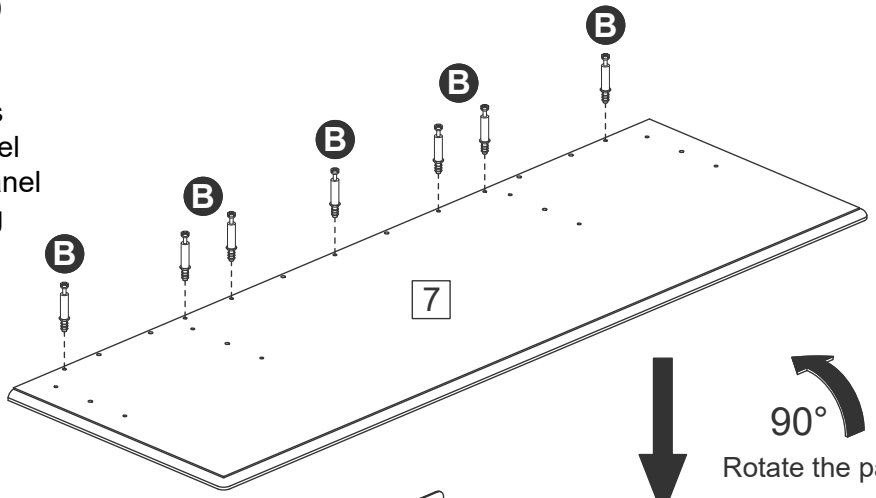

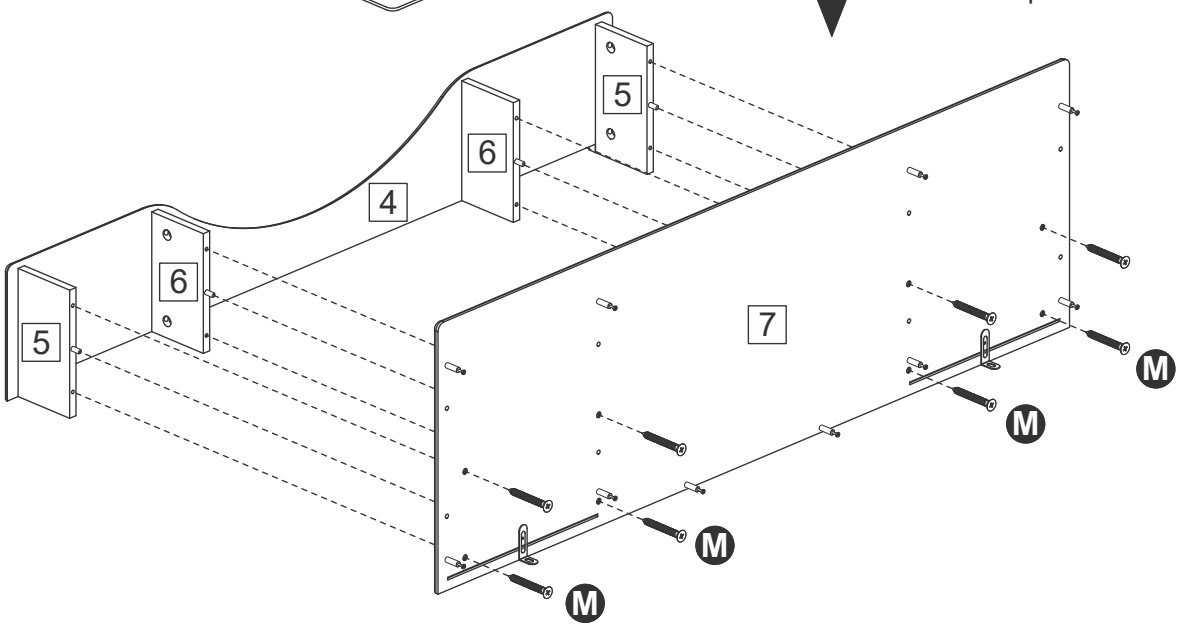

Assembly Instructions

Step 18

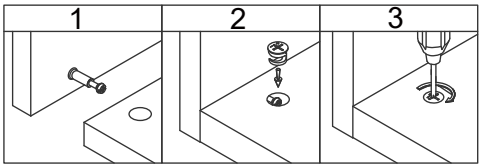

C x10





Attach Panels (4), (5), (6), and (7) to Panels (8), (10), (11), (12), and (18), insert the Cam Locks (C), and tighten them.

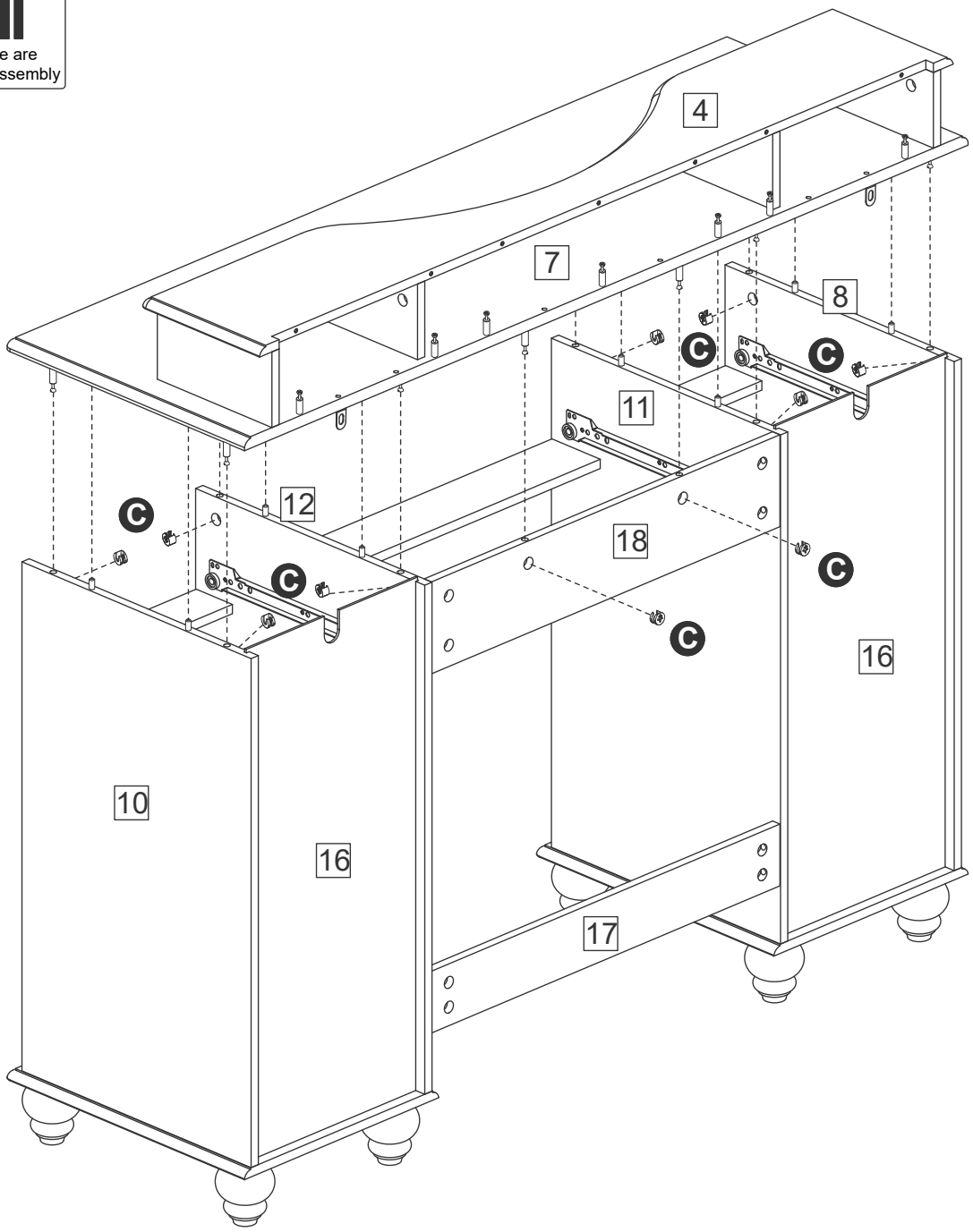

Assembly Instructions

Step 19

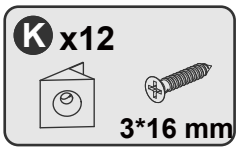

As shown in the figure on the right, attach Part (K) to Panels (8), (10), (11), and (12).

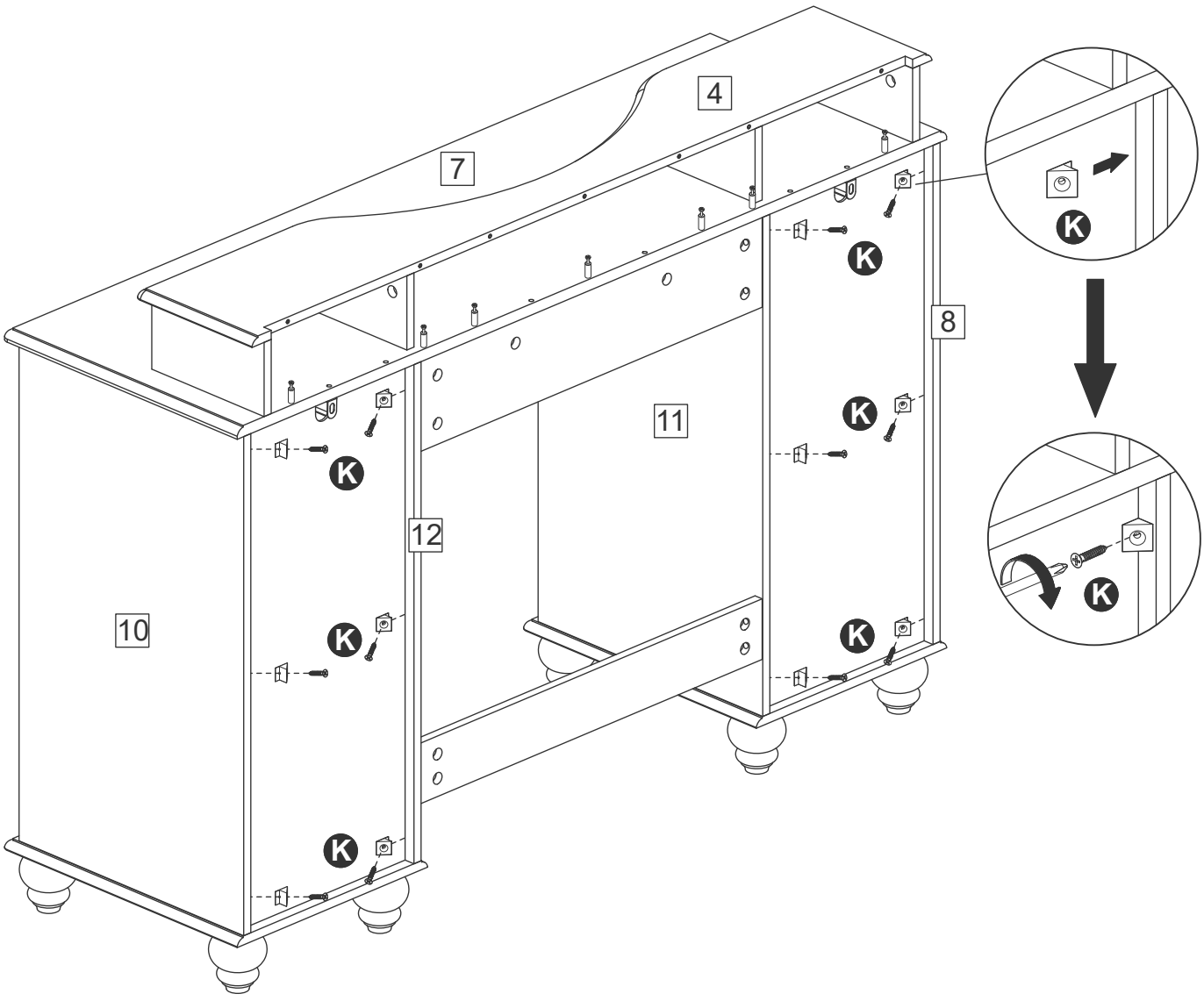

Assembly Instructions

Step 20

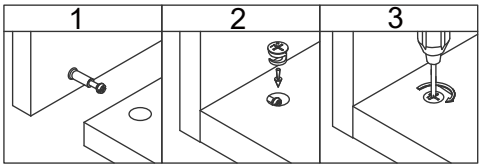



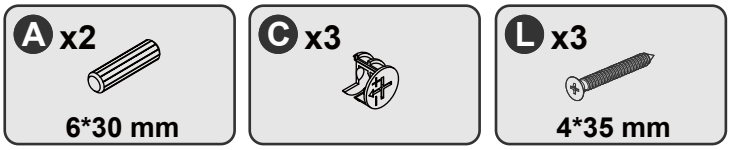

First, insert the Wooden Dowels (A) into Panel (7). Then, attach Panel (1) to Panel (7), insert the Cam Locks (C), and tighten them. Finally, secure Panel (1) to Panel (4) using screws (L).

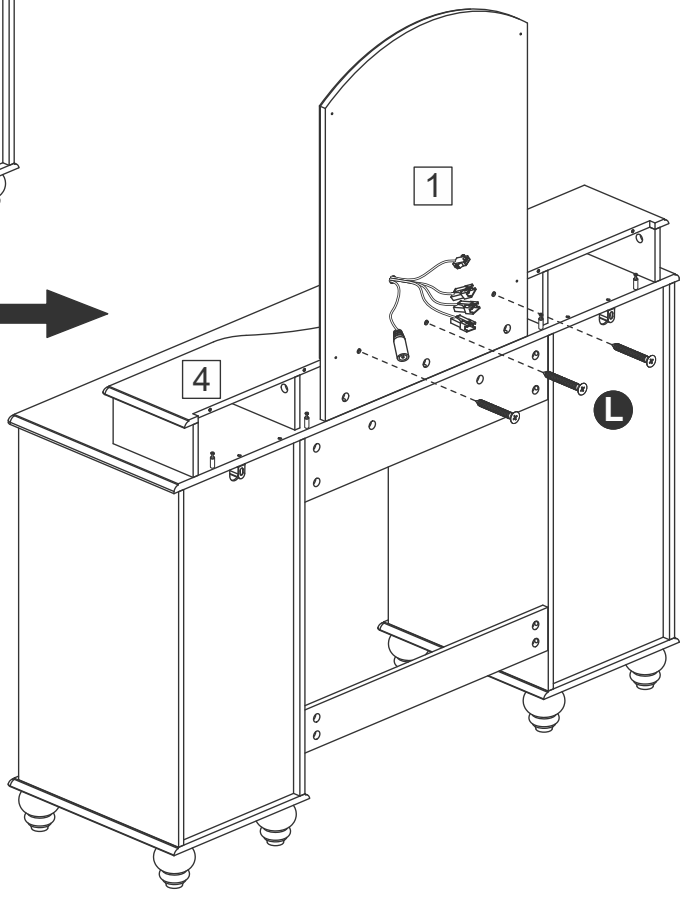

Assembly Instructions

Step 21

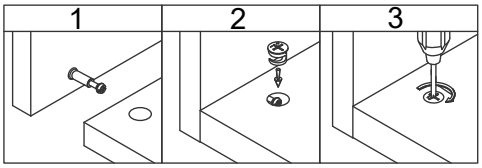

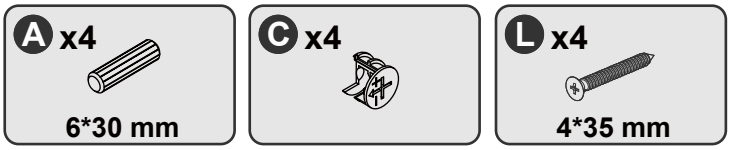



First, insert the Wooden Dowels (A) into Panel (7). Then, attach Panels (2) and (3) to Panel (7), insert the Cam Locks (C), and tighten them. Finally, secure Panels (2) and (3) to Panel (4) using screws (L).

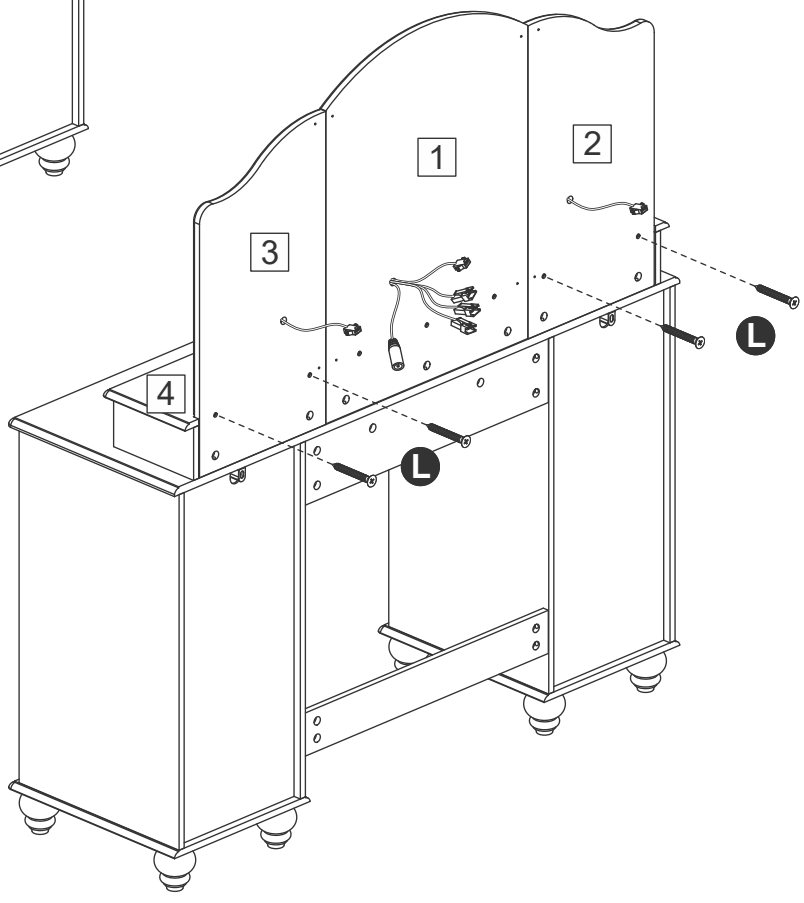

Assembly Instructions

Step 22

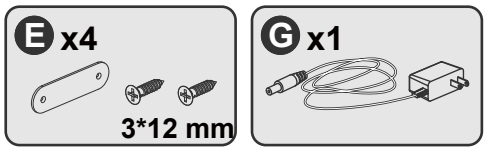

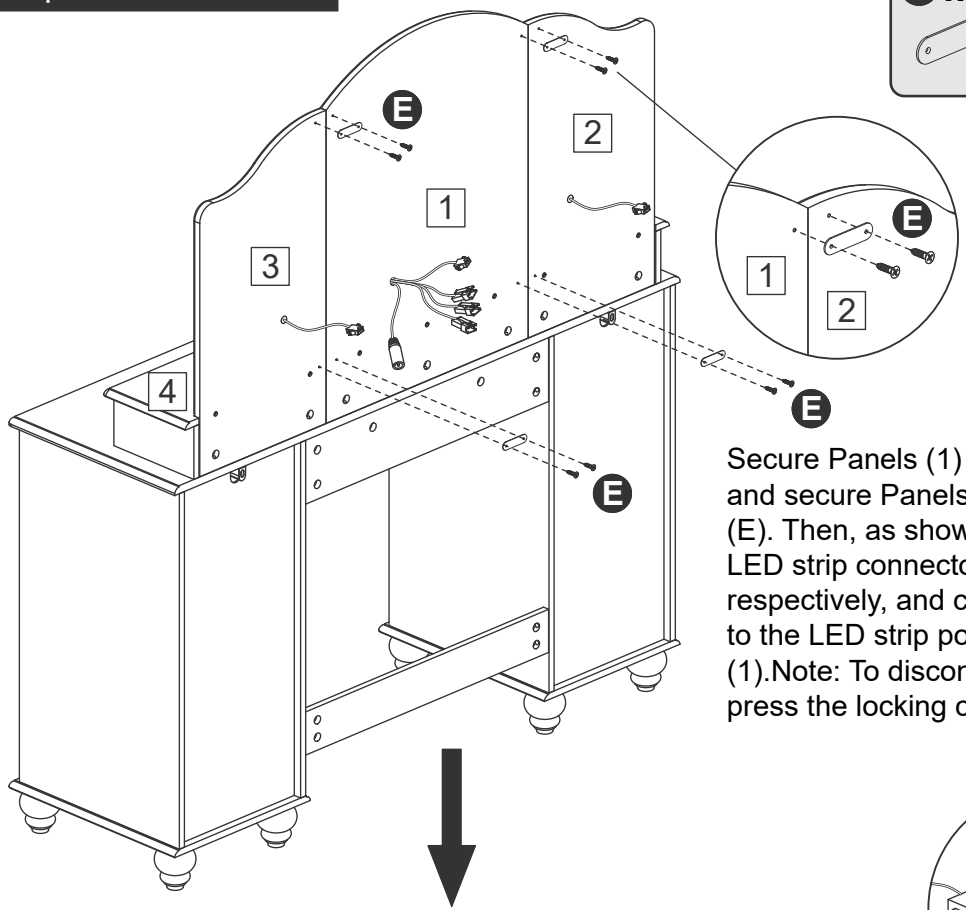

Secure Panels (1) and (2) together using Part (E), and secure Panels (1) and (3) together using Part (E). Then, as shown in the figure, connect the LED strip connectors on Panels (1), (2), and (3), respectively, and connect the power adapter (G) to the LED strip port on the back of Panel (1).Note: To disconnect the LED light connectors, press the locking clip on the right-side connector.

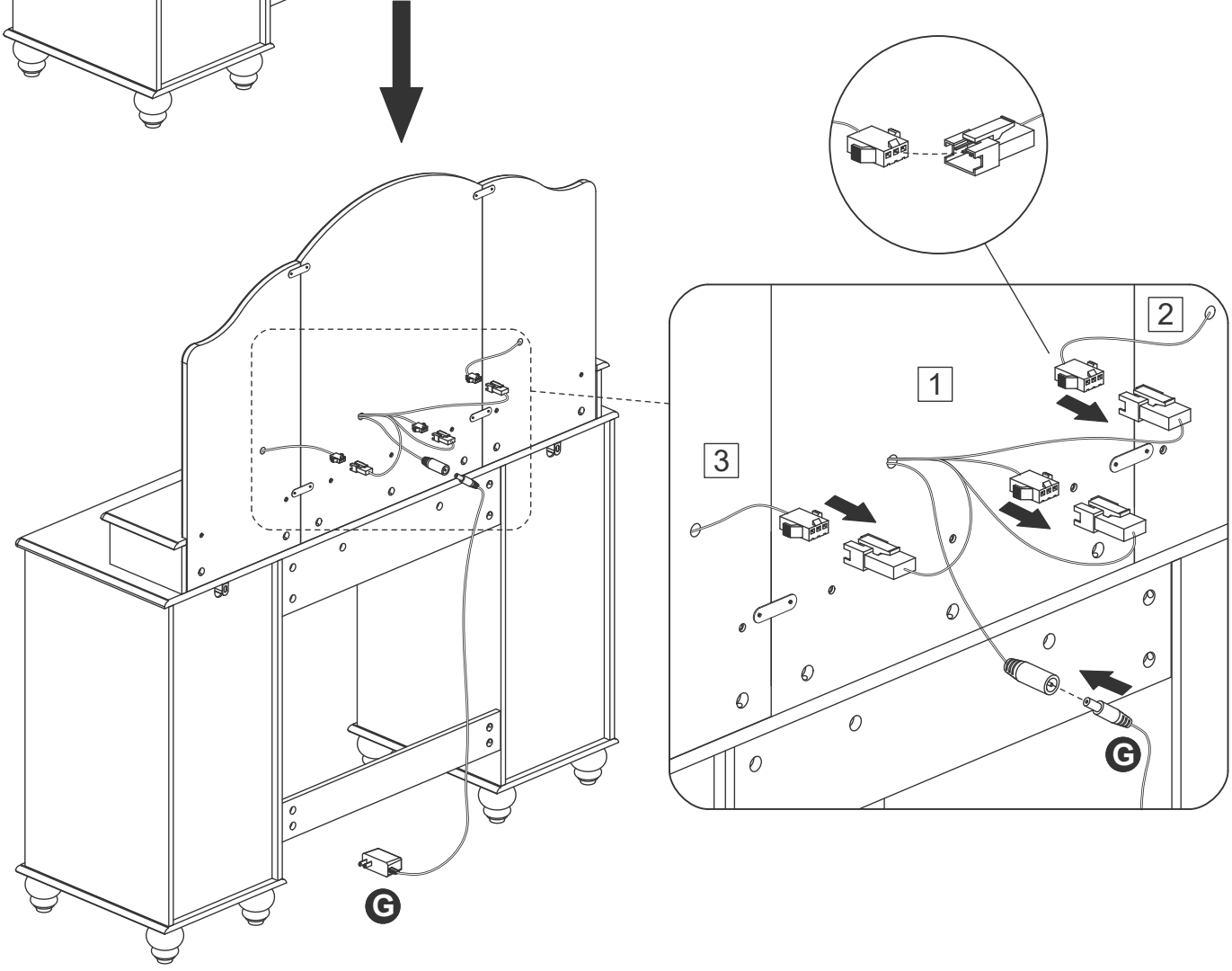

Assembly Instructions

Step 23

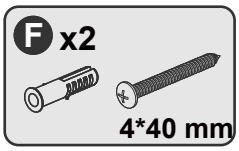

Before proceeding with this step, please read the "Guide to Wall Mounting & Fixings" on page 36.

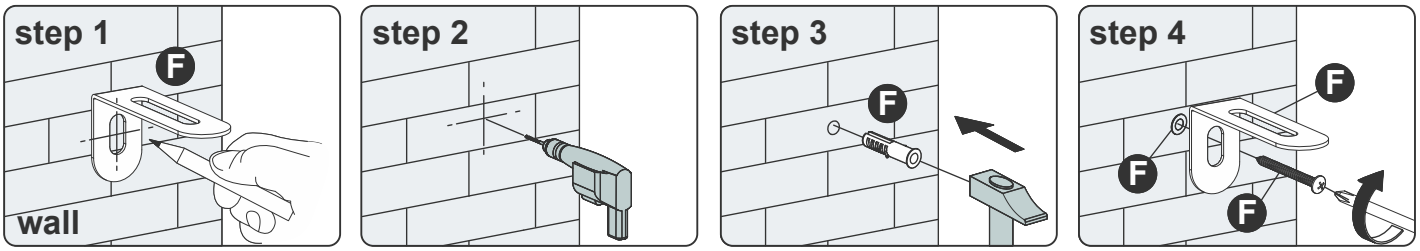

This product is designed as a freestanding unit. However, it is recommended to secure it to the wall.

1. Move the product to the desired location.
2. Use a suitable marking tool to mark the positions of the mounting holes on the wall.

⚠ Warning:
Before drilling, check for any hidden pipes or cables inside the wall.

3. Drill two 6 mm holes and insert the wall anchors.
4. Secure the bracket (F) to the wall.

Secure the cabinet to the wall using Part (F).

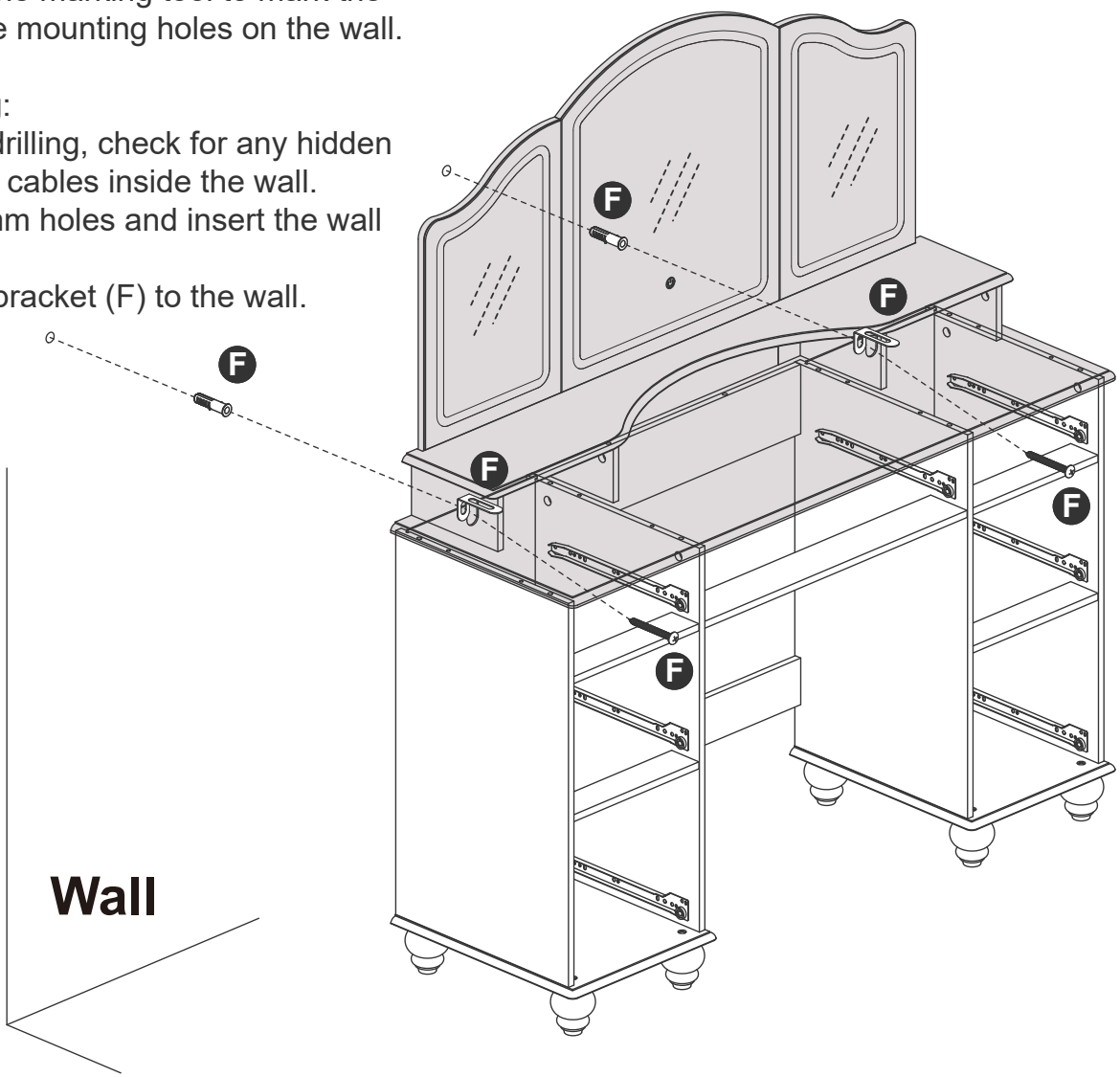

Assembly Instructions

Step 24

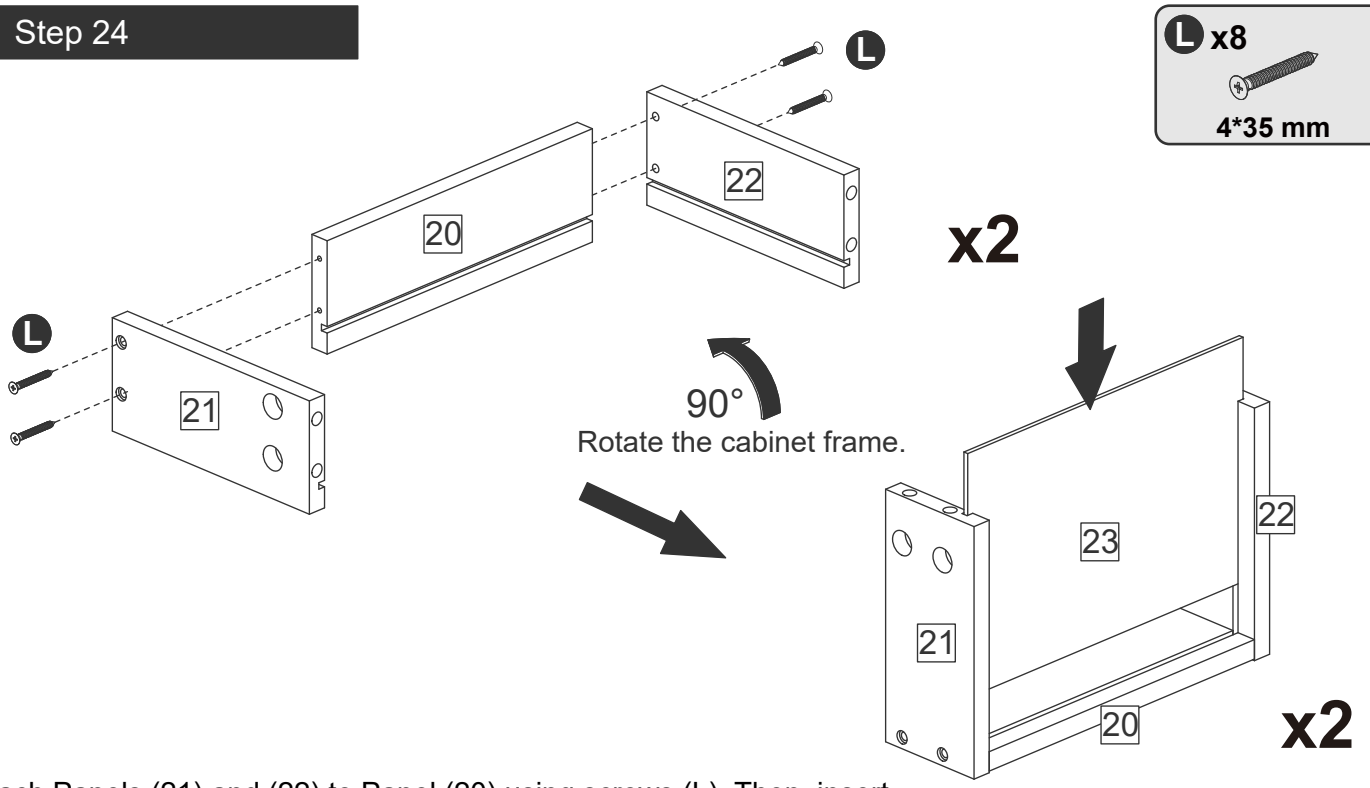

Attach Panels (21) and (22) to Panel (20) using screws (L). Then, insert Panel (23) into the grooves of Panels (20), (21), and (22).

Step 25

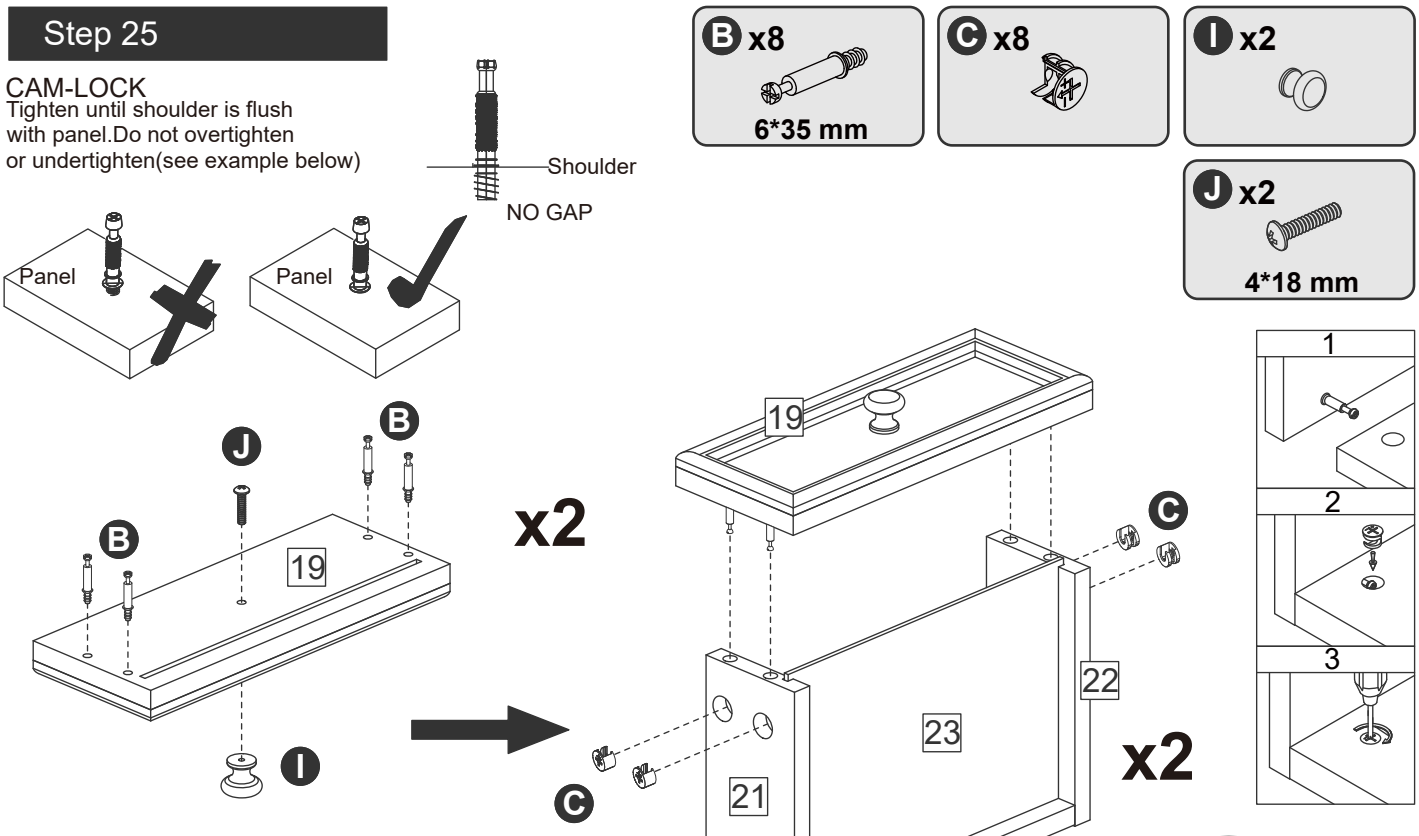

First, install the Cam Bolts (B) onto Panel (19). Then, attach Part (I) to Panel (19) using Bolts (J). Finally, attach Panel (19) to Panels (21) and (22), insert the Cam Locks (C), and tighten them.

After this step, rotate the frame for the next operation

Assembly Instructions

Step 26

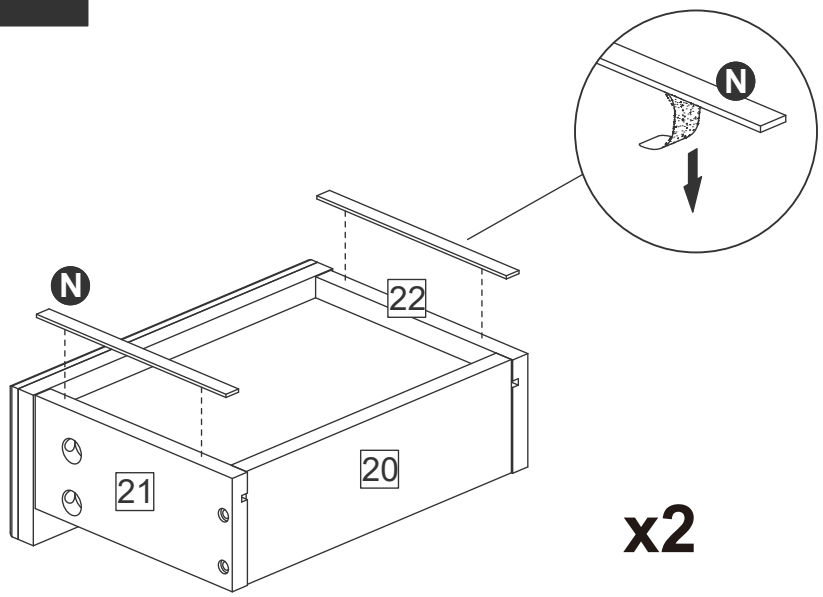

N x4

150*10*2 mm

As shown in the figure, attach Part (N) to Panels (21) and (22).

Step 27

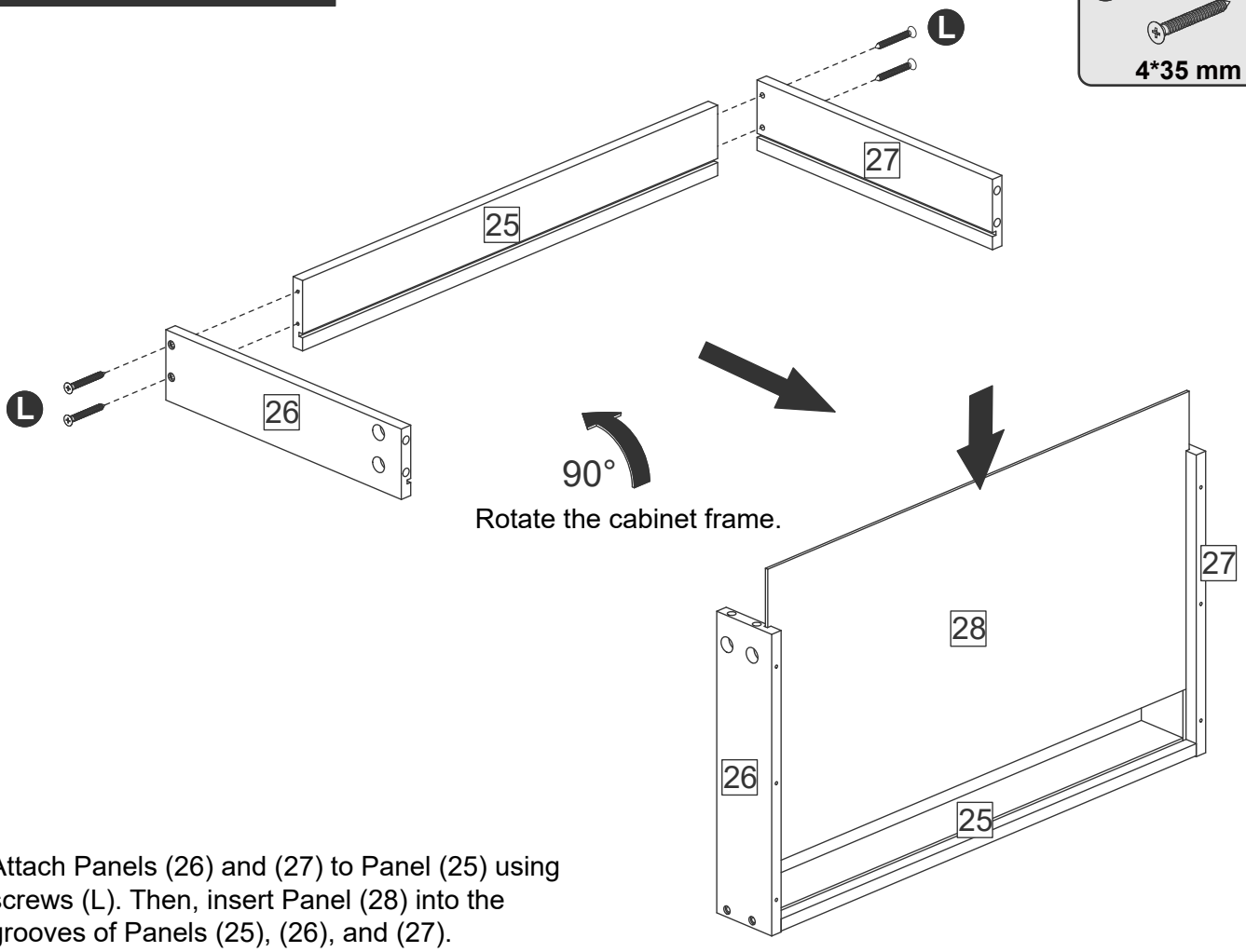

L x4

4*35 mm

Attach Panels (26) and (27) to Panel (25) using screws (L). Then, insert Panel (28) into the grooves of Panels (25), (26), and (27).

Assembly Instructions

Step 28

CAM-LOCK
Tighten until shoulder is flush with panel.Do not overtighten or undertighten(see example below)

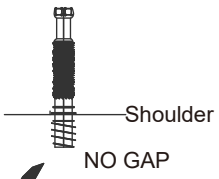

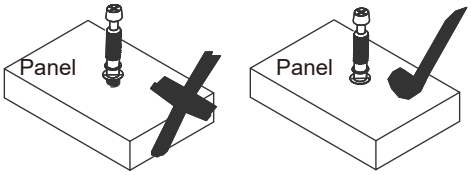

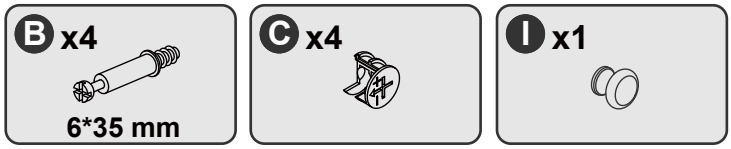

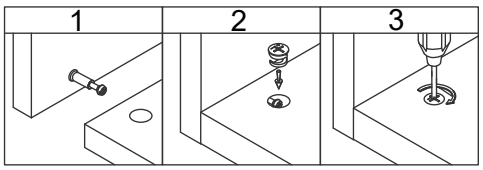

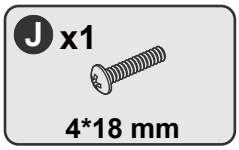

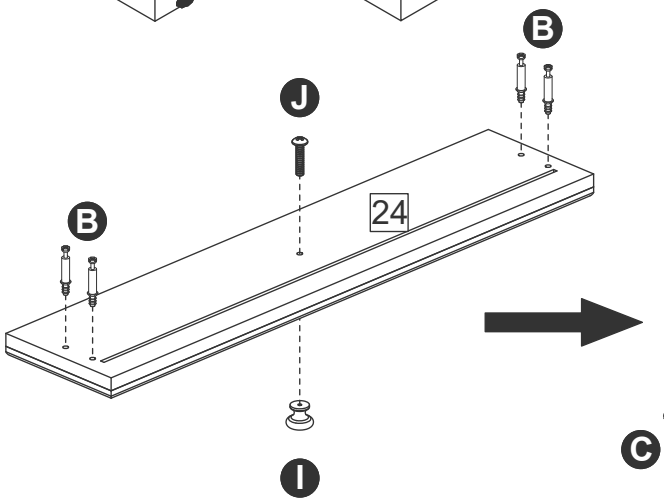

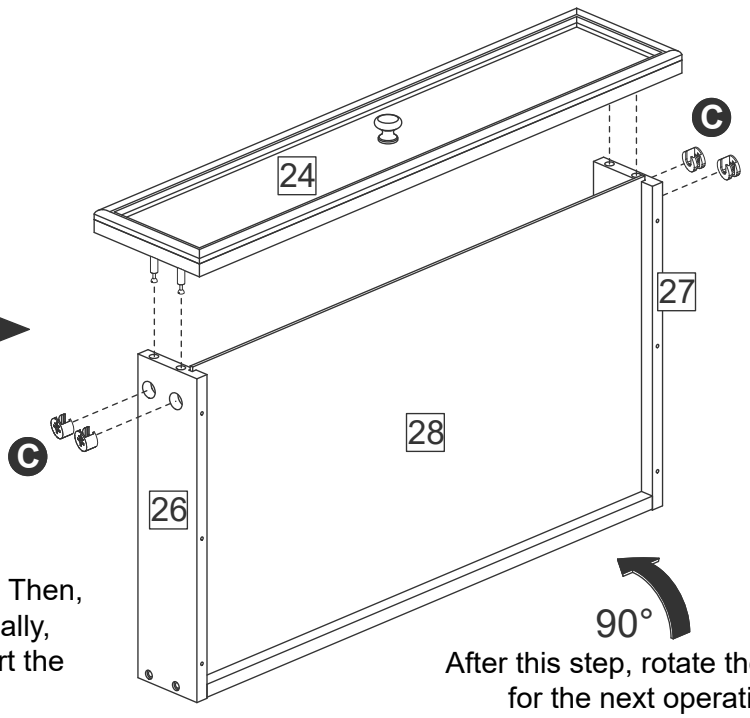

First, install the Cam Bolts (B) onto Panel (24). Then, attach Part (I) to Panel (24) using Bolts (J). Finally, attach Panel (24) to Panels (26) and (27), insert the Cam Locks (C), and tighten them.

After this step, rotate the frame for the next operation

Step 29

Attach the Slide Rail (DL) to Panel (26) using screws (H), and attach the Slide Rail (DR) to Panel (27) using screws (H).

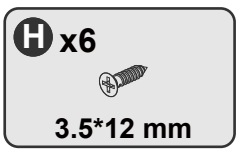

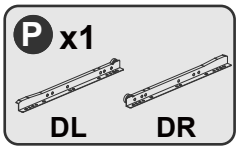

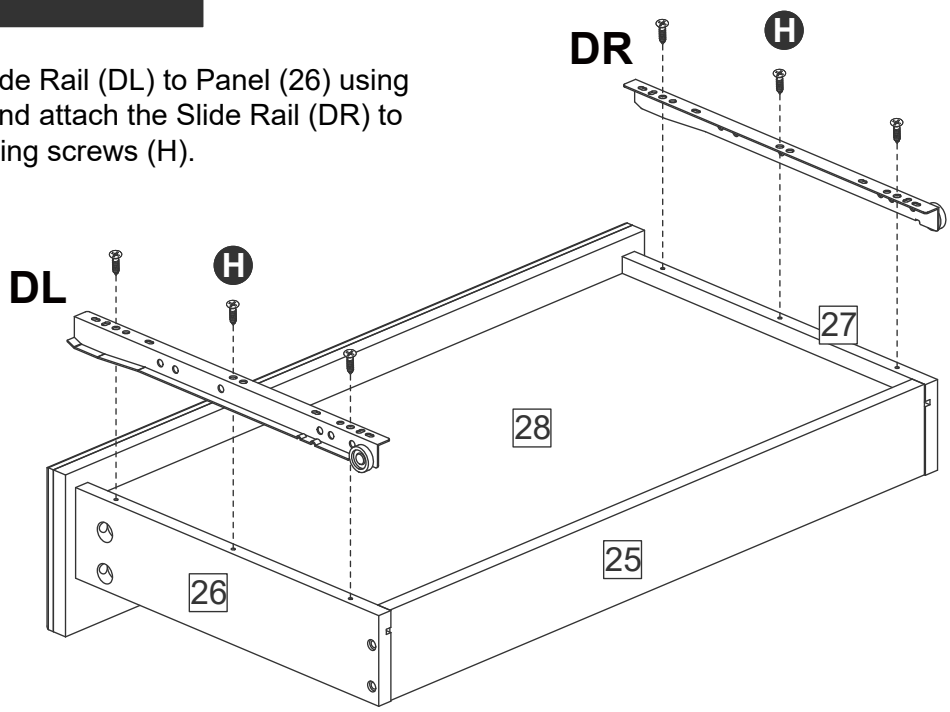

Assembly Instructions

Step 30

L x8
4*35 mm

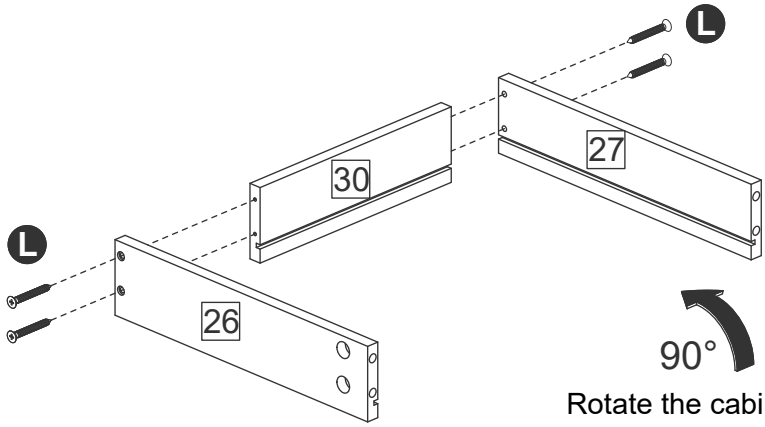

x2

90°
Rotate the cabinet frame.

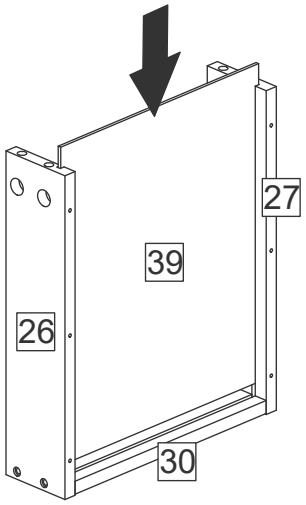

x2

Attach Panels (26) and (27) to Panel (30) using screws (L). Then, insert Panel (39) into the grooves of Panels (26), (27), and (30).

Step 31

B x8
6*35 mm

C x8

I x2

J x2
4*18 mm

CAM-LOCK
Tighten until shoulder is flush with panel.Do not overtighten or undertighten(see example below)

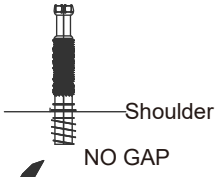

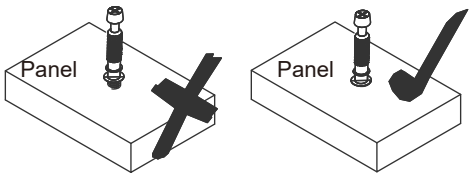

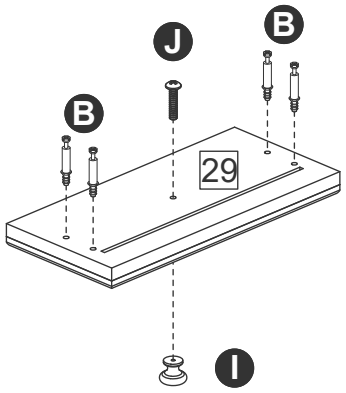

x2

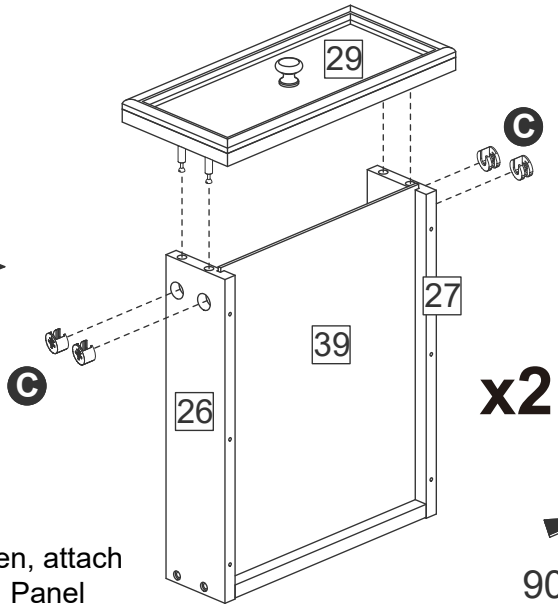

x2

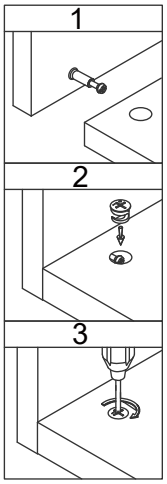

90°
After this step, rotate the frame for the next operation

First, install the Cam Bolts (B) onto Panel (29). Then, attach Part (I) to Panel (29) using Bolts (J). Finally, attach Panel (29) to Panels (26) and (27), insert the Cam Locks (C), and tighten them.

Assembly Instructions

Step 32

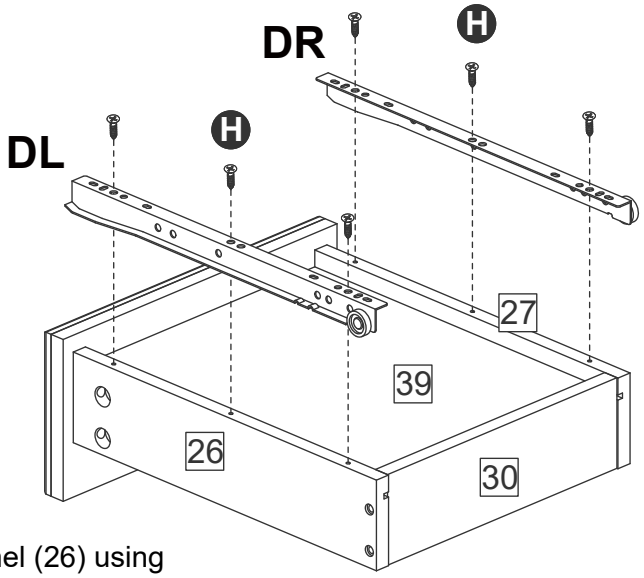

x2

H x12

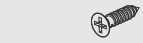

3.5*12 mm

P x2

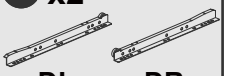

DL DR

Attach the Slide Rail (DL) to Panel (26) using screws (H), and attach the Slide Rail (DR) to Panel (27) using screws (H).

Step 33

A x4



6*30 mm

L x8



4*35 mm

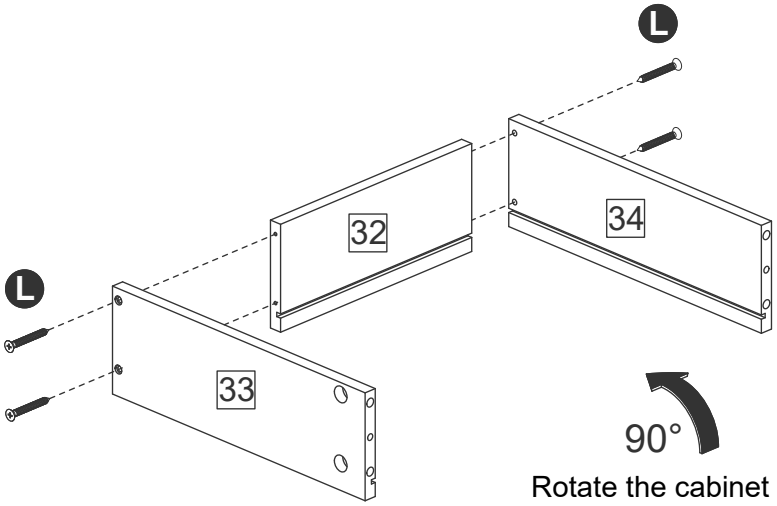

x2

90°

Rotate the cabinet frame.

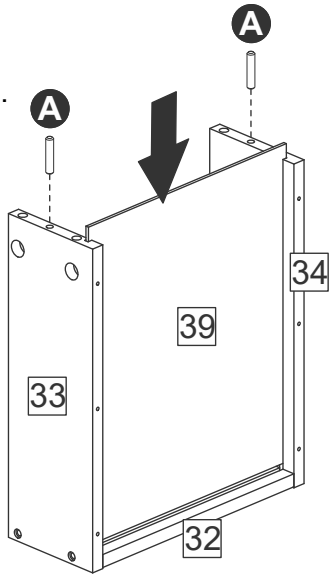

x2

Attach Panels (33) and (34) to Panel (32) using screws (L), then insert Panel (39) into the grooves of Panels (32), (33), and (34), and finally insert the Wooden Dowels (A) into Panels (33) and (34).

Assembly Instructions

Step 34

CAM-LOCK
Tighten until shoulder is flush with panel.Do not overtighten or undertighten(see example below)

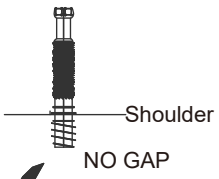

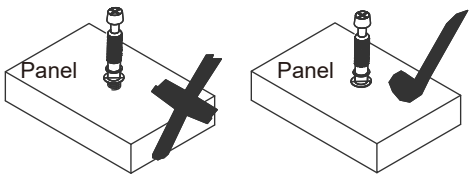

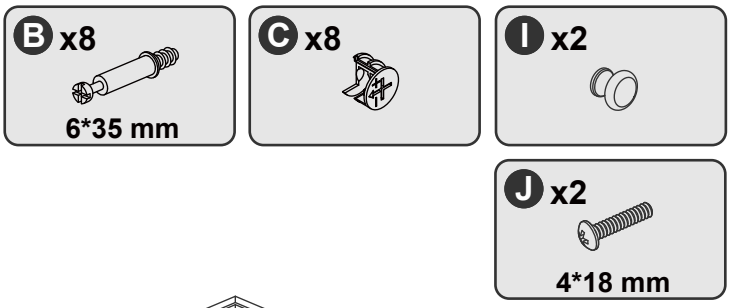

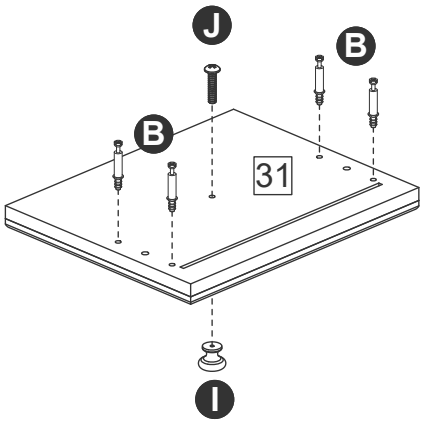

x2

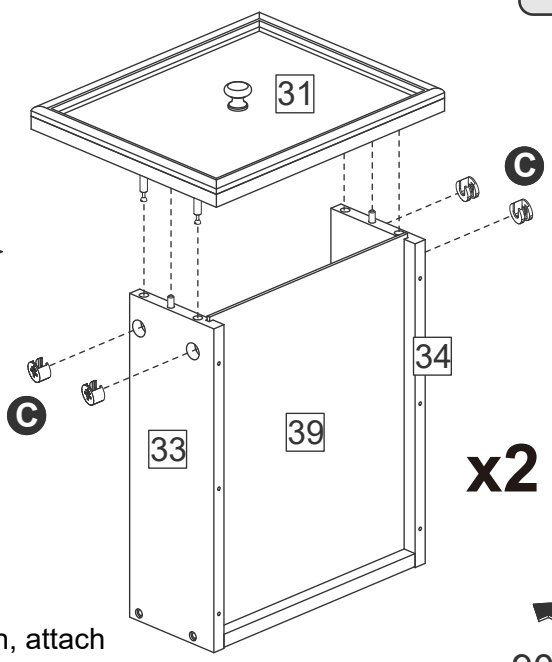

x2

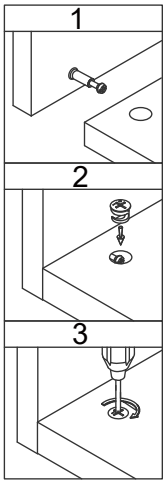

First, install the Cam Bolts (B) onto Panel (31). Then, attach Part (I) to Panel (31) using Bolts (J). Finally, attach Panel (31) to Panels (33) and (34), insert the Cam Locks (C), and tighten them.



After this step, rotate the frame for the next operation

Step 35

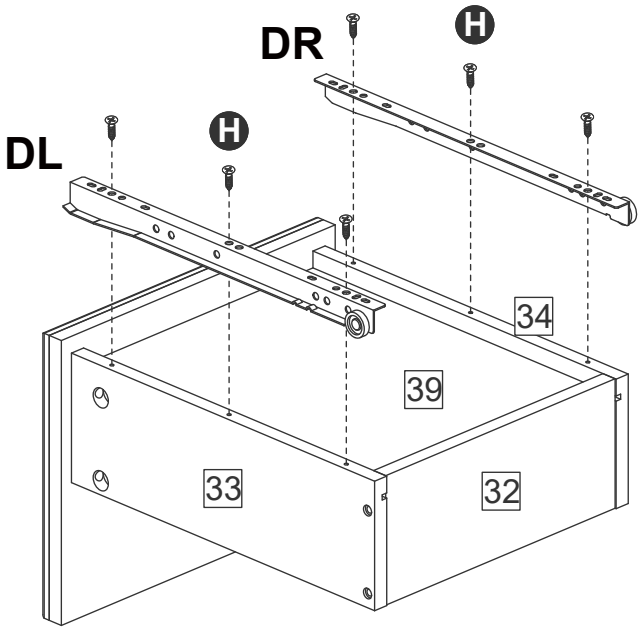

x2

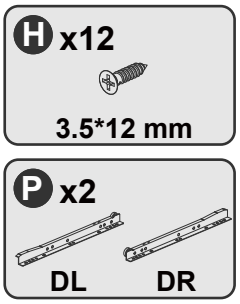

Attach the Slide Rail (DL) to Panel (33) using screws (H), and attach the Slide Rail (DR) to Panel (34) using screws (H).

Assembly Instructions

Step 36

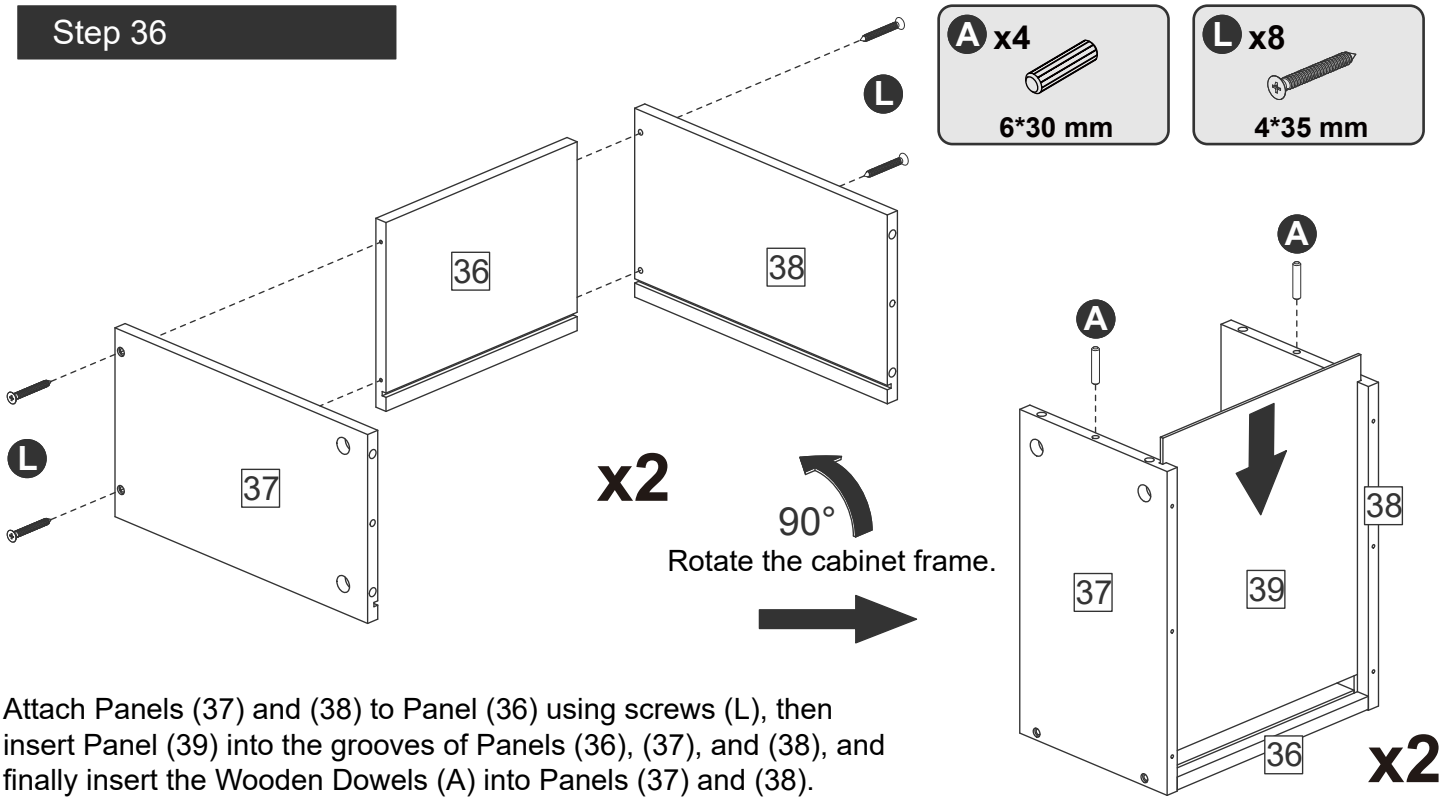

Attach Panels (37) and (38) to Panel (36) using screws (L), then insert Panel (39) into the grooves of Panels (36), (37), and (38), and finally insert the Wooden Dowels (A) into Panels (37) and (38).

Step 37

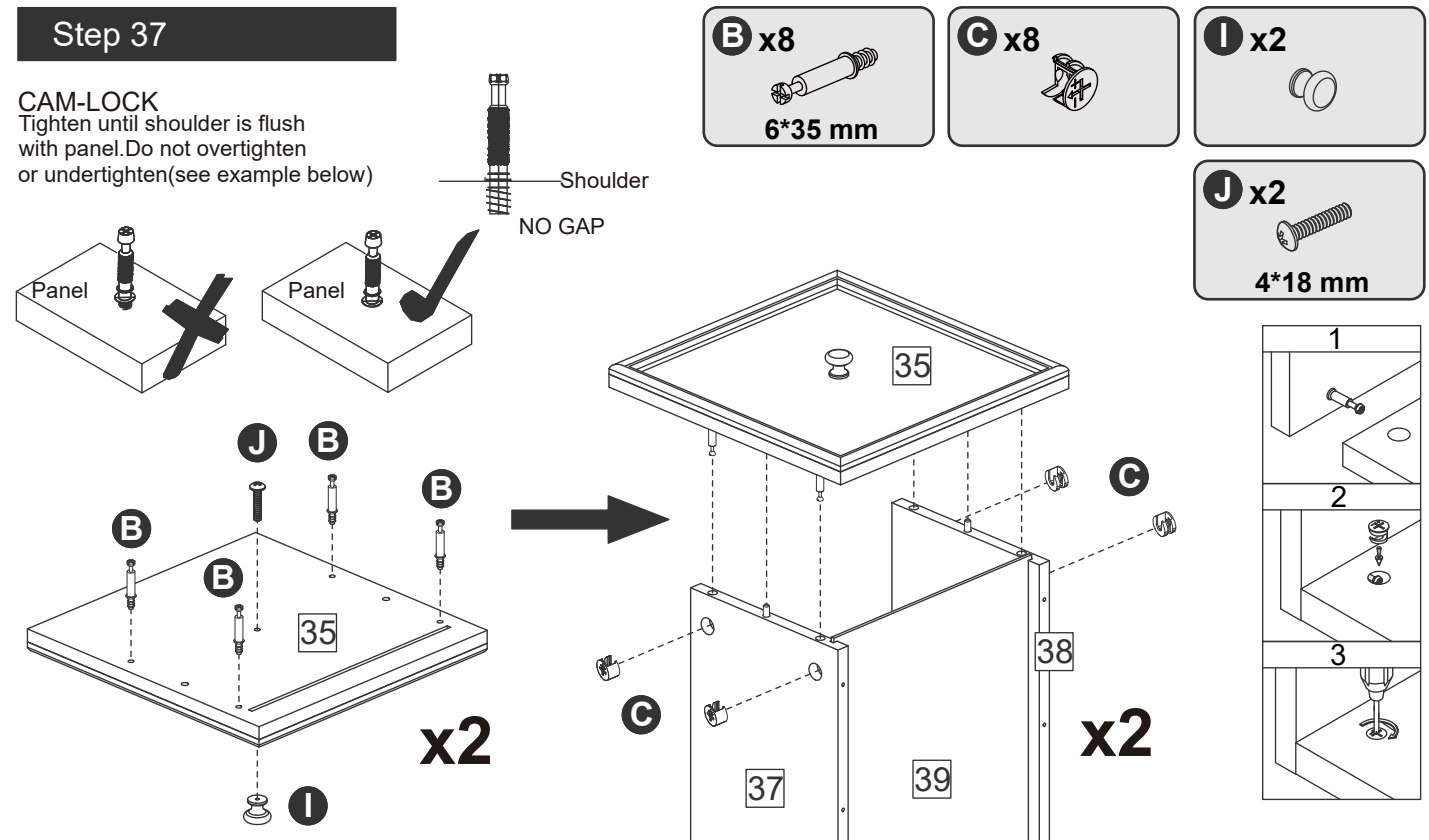

First, install the Cam Bolts (B) onto Panel (35). Then, attach Part (I) to Panel (35) using Bolts (J). Finally, attach Panel (35) to Panels (37) and (38), insert the Cam Locks (C), and tighten them.

Assembly Instructions

Step 38

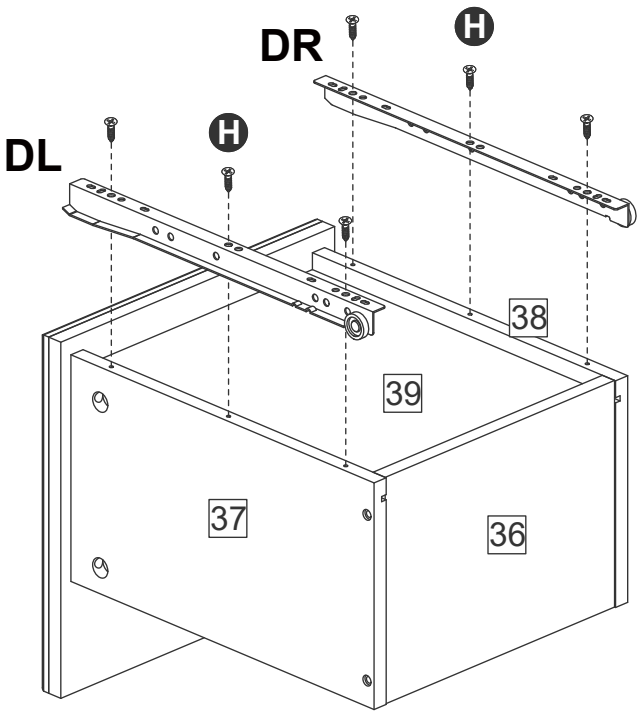

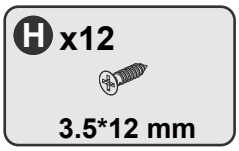

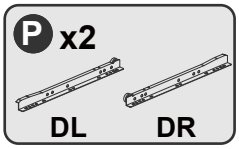

x2

Attach the Slide Rail (DL) to Panel (37) using screws (H), and attach the Slide Rail (DR) to Panel (38) using screws (H).

Step 39

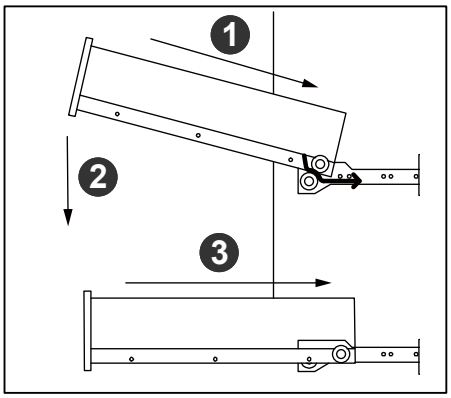

As shown in the figure, install the drawer into the cabinet.

Assembly Instructions

Step 40

As shown in the figure, install the drawer into the cabinet.

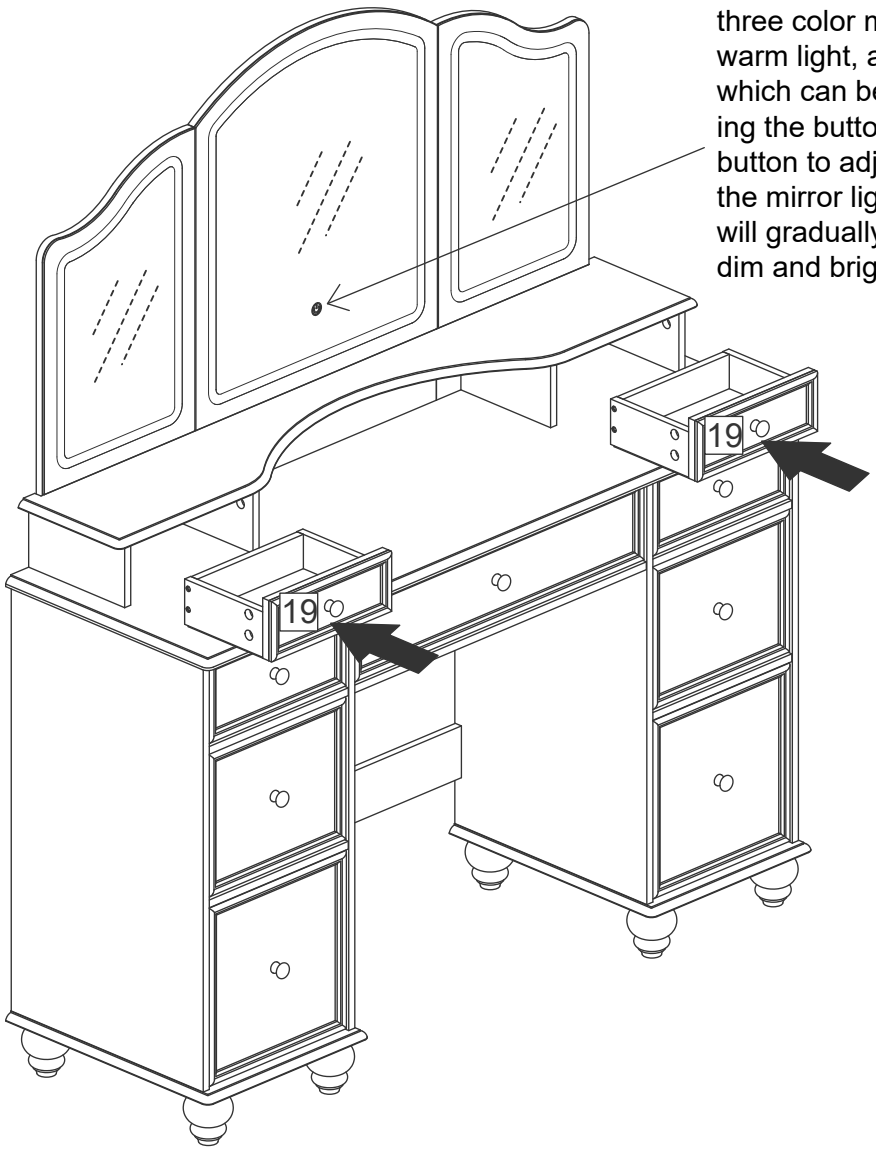

This LED mirror light provides three color modes: white light, warm light, and neutral light, which can be switched by pressing the button. Press and hold the button to adjust the brightness of the mirror light. The brightness will gradually change between dim and bright.

A Guide to Wall Mounting & Fixings

Important note:

If plastic wall plugs (rawl plugs) are supplied with your product, e.g.:



- these are only suitable for use in masonry walls.

If you are in any doubt about the correct wall plugs for your wall, seek professional advice.

Failure of the product due to using the incorrect fixings is the responsibility of the installer.

Important: when drilling into walls always check that there are no hidden wires or pipes etc.

Make sure that the screws and wall plugs being used are suitable for **supporting your unit. Consult a qualified tradesperson if you** are unsure.

Hints:

1: General rule: always use a larger screw and wall plug if you are not sure.
2: Ensure you use the recommended drill bit to match the wall plug and hole size.
3: Ensure you drill the hole horizontally; do not force the drill or enlarge the hole.
4: Take extra care when drilling high walls, ceilings and ceramic tiles. Ensure wall plugs are inserted beyond the thickness of the ceramic tiles to avoid the tiles splitting or cracking.
5: Ensure wall plugs are well fitted and are a tight fit in the drilled hole.

Types of walls

You can use one of the following types of wall plug if your walls are made of brick, breeze block, concrete, stone or wood.

No.1 “General Purpose” wall plug

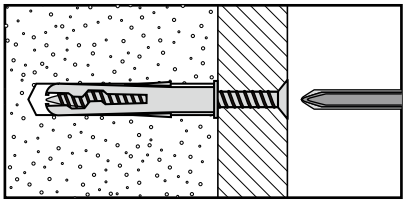

Generally aerated blocks should not be used to support heavy loads, use a specialist fitting in this case. For light loads, general purpose wall plugs can be used.

No.3 “Cavity Fixing” wall plug

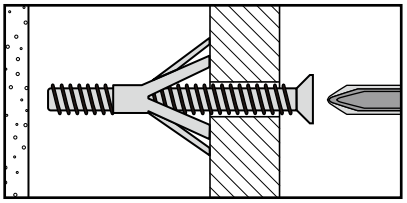

For use with plasterboard partitions or hollow wooden doors.

No.5 “Hammer Fixing” wall plug

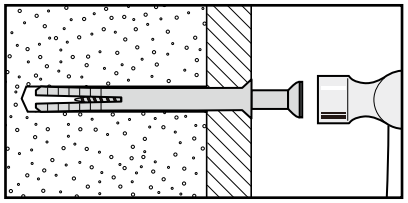

For use with walls stuck with plasterboard. The hammer fixing allows it to be fixed to the wall rather than the plasterboard. Always check the fixing is secure to the retaining wall.

No.2 “ Plasterboard” wall plug

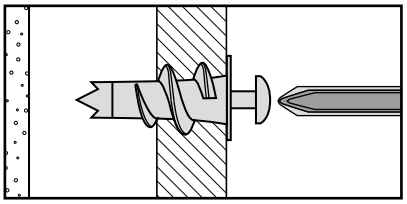

For use when attaching light loads onto plasterboard partitions.

No.4 “ Cavity Fixing – Heavy Duty” wall plug

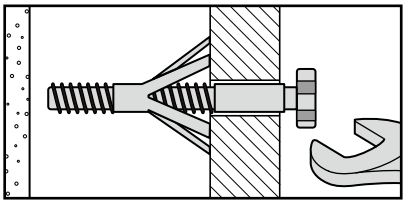

For use when fitting or supporting heavy loads such as shelving, wall cabinets and coat racks.

No.6 “ Shield Anchor” wall plug – heavy loads

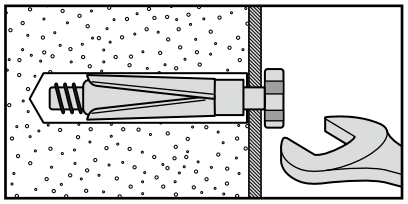

For use with heavier loads such as TV and HiFi speakers and satellite dishes etc.

Care & Maintenance

Safety: always check the fitting and location to ensure your safety in and around the home.

Fitting: from time to time check the fitting to ensure the wall plugs or screws do not become loose.

Sku:
C002776010
C002776020

V1.0

Assembly Instruction