Installation & Usage Guide

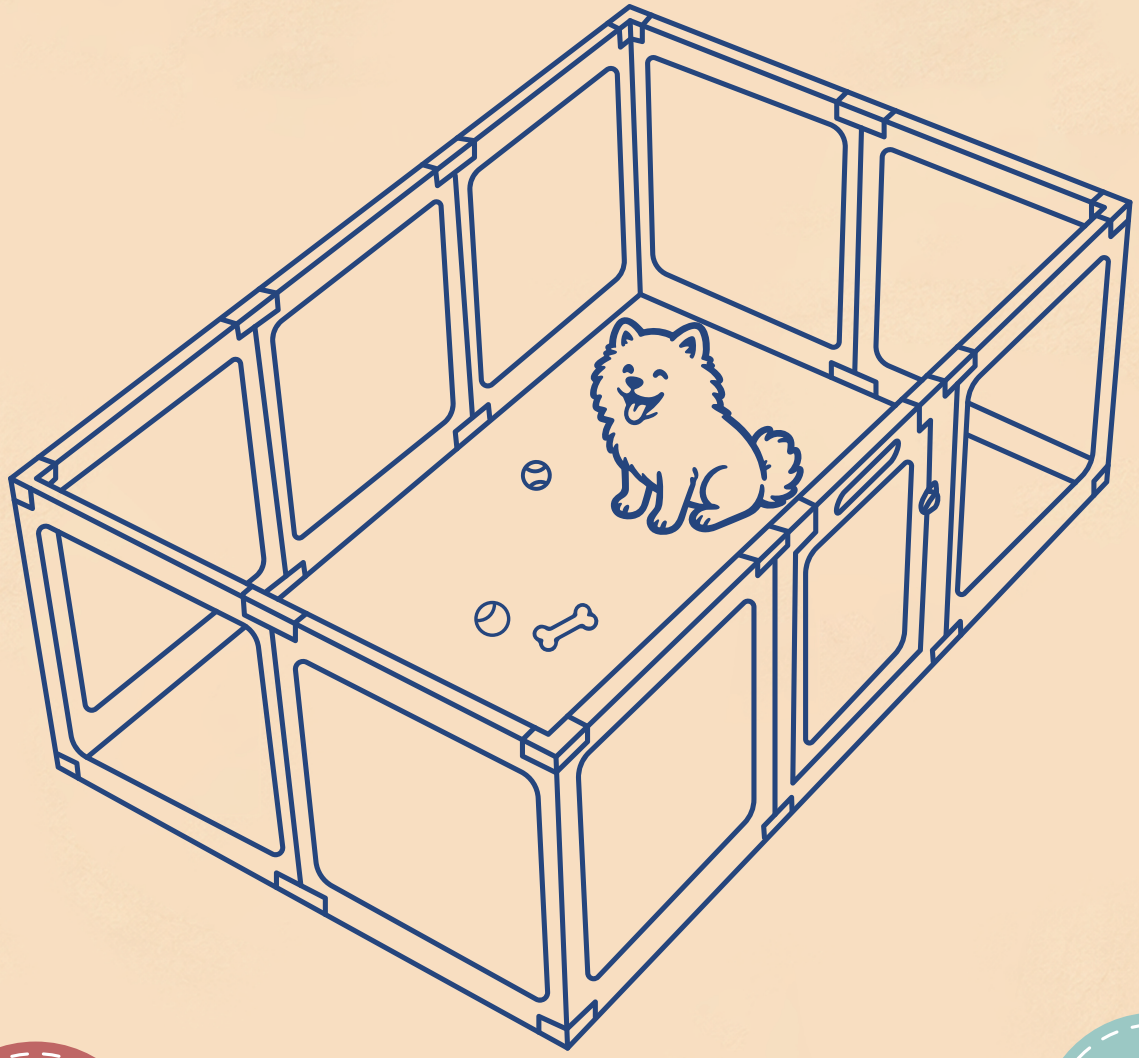

Aesthetic

Comfortable

Installation Tutorial

Stable

Safe

Precautions

1.When installing at the bottom, ensure that the post and accessory holes are aligned before pressing down forcefully to engage the holes.

2.We are equipped with **two types** of L-shaped connectors. Please note during installation that the one with a larger quantity is the "**Standard L-shaped Connector**". If you are only assembling it into a square shape, only the "Standard L-shaped Connector" is required.

3.16 panels will be sent in **two 8-panel** packages. Deliveries may arrive separately. Feel free to contact us.

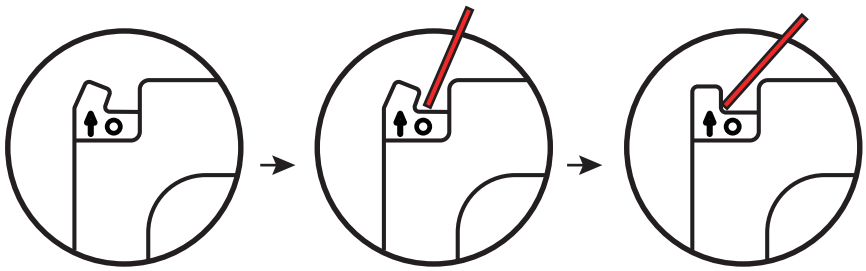

Important Notes

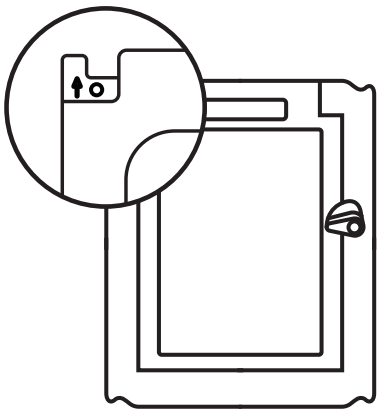

Things You Might Notice

Due to shipping or misaligned pressing during assembly with the connector, the panel's corner protrusion may tilt to one side. This is normal and can be easily fixed.

Push the misaligned protrusion back into place using a slender, rigid object from the side opposite the tilt.

Top-down Steps

For One Room

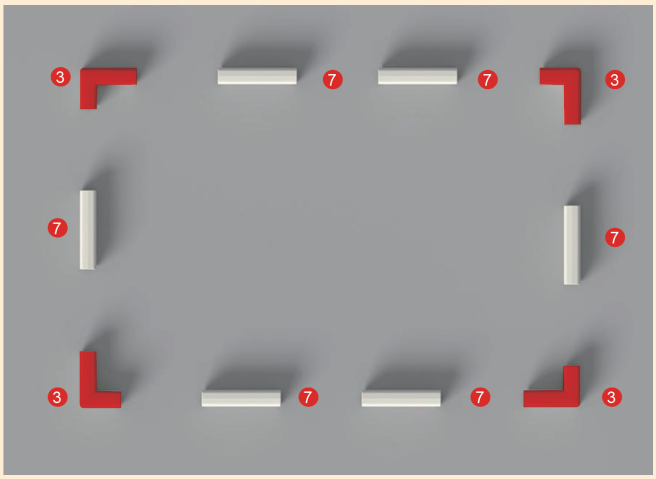

For Two Room

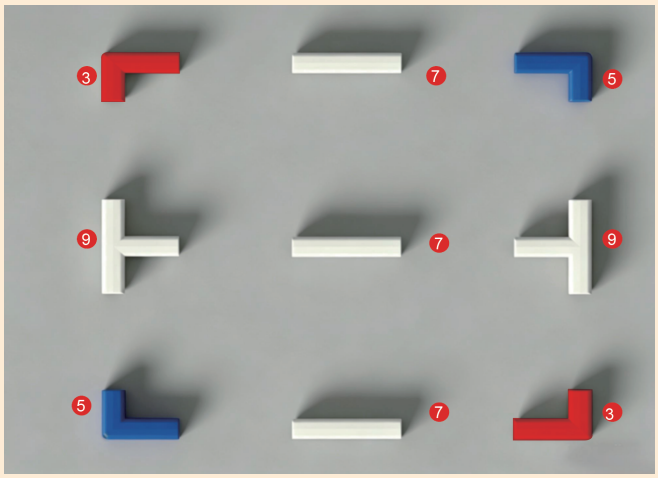

Please Note

- The Installation Method For The Lower Accessories Is The Same As That For The Upper Accessories; Those With Suction Cups Should Be Installed At The Bottom.
- Please Pay Attention To The **Corner Connectors** During Installation. Refer To The Installation Direction Of The Accessories In The Picture Above, And Be Sure To Follow The ③/⑤ Direction.
- If You Want To Divide It Into Two Separate Compartments, You Must Have T-Shaped Connectors, And Two Types Of L-Shaped Connectors Are Required.
- If You Want To Convert It Into An L-Shape, You Must Prepare One Pair Of Reverse L-Shaped Accessories.

IF ANY ACCESSORIES ARE MISSING, PLEASE CONTACT US.

PART LIST

Tip | T connectors only available for 12-panel and 16-panel kits.

1
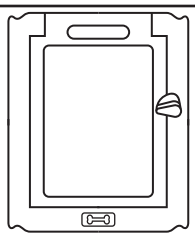
Door Panel

2
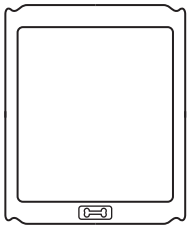
Fence Panel

3
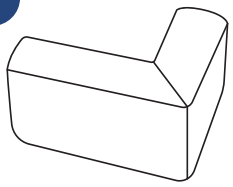
Standard L-shaped Connector (TOP)

4
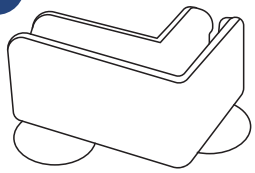
Standard L-shaped Connector (Anti-slip)

5
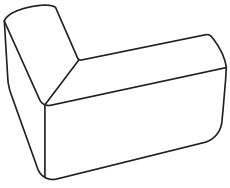
Reverse L-shaped Connector (TOP)

6
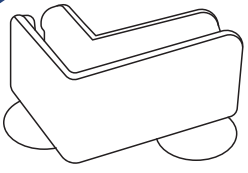
Reverse L-shaped Connector (Anti-slip)

7
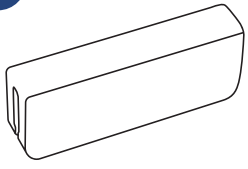
I-shaped Connector (TOP)

8
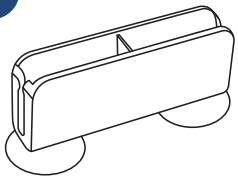
I-shaped Connector (Anti-slip)

9
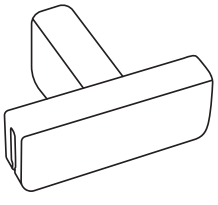
T-shaped Connector (TOP)

10
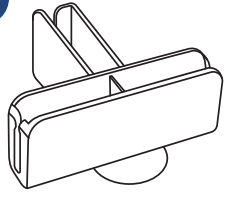
T-shaped Connector (Anti-slip)

INSTALLATION

This set of instructions is for assembling a single-compartment playpen. If you need to assemble a two-compartment playpen, the first step reverse L-shaped connectors will be required.

01
STEP

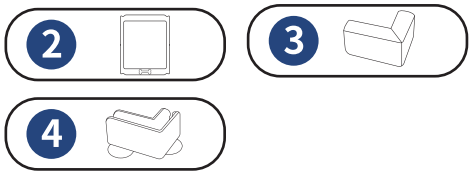

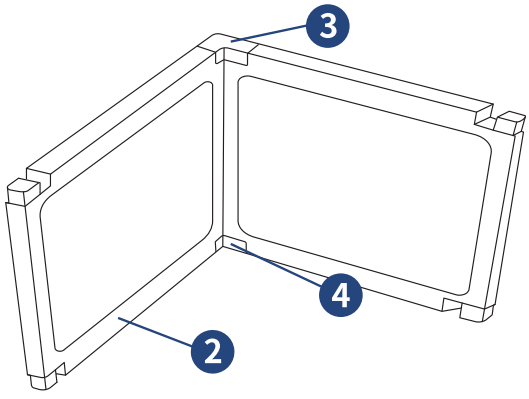

- For rectangular assembly only: No need to differentiate standard/reverse L-shaped connectors.

02
STEP

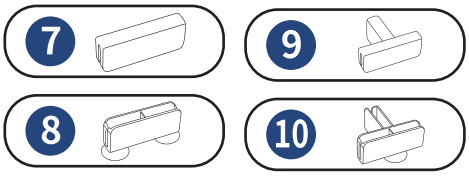

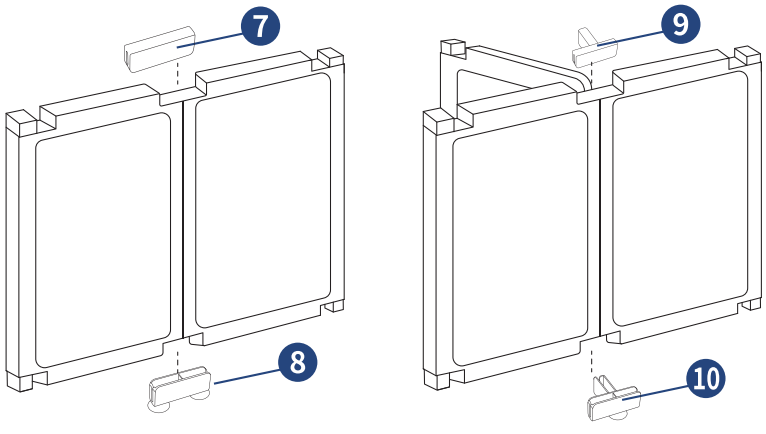

- The I-shaped and T-shaped Connectors can be used to expandthe playpen, as shown in the diagram.
- The T-shaped connector can change to 2-room.

03
STEP

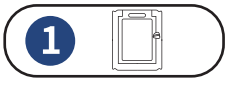

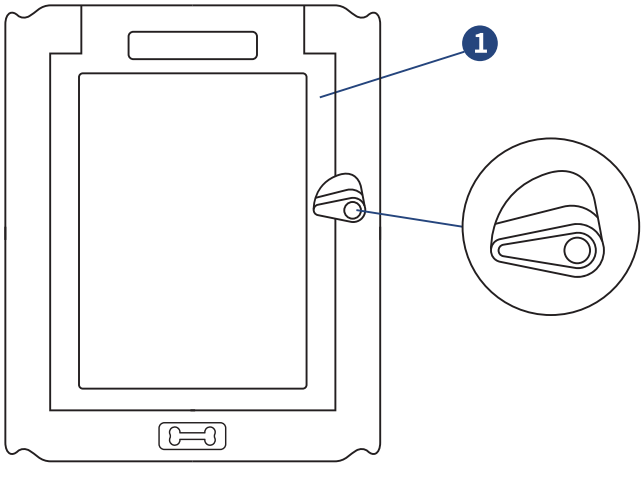

EXPAND YOUR SPACE:

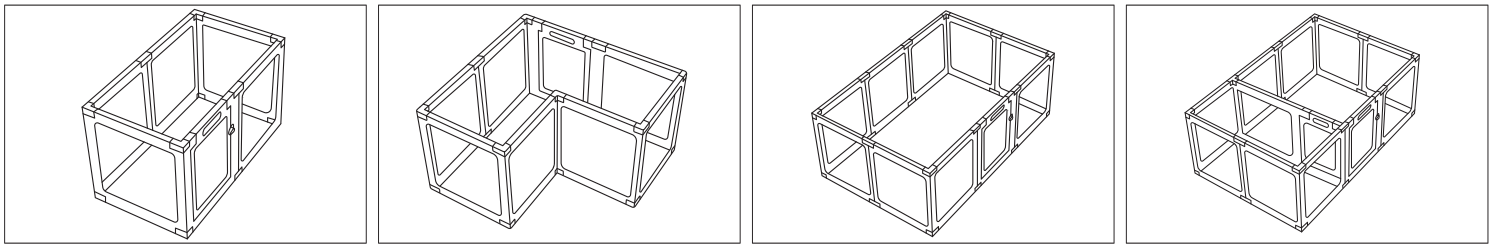

- An L-shaped playpen requires one pair of reverse L-shaped connectors.
- For a two-compartment playpen, two pairs of reverse L-shaped connectors are needed for the diagonal positions.

INSTALLATION

6 Panles

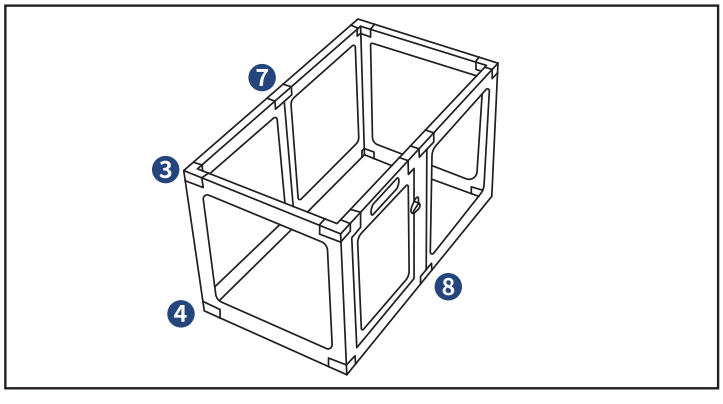

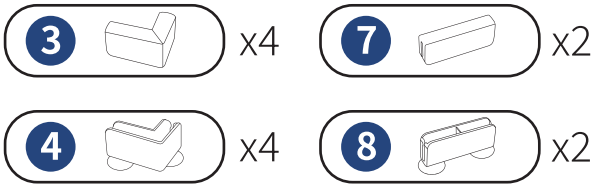

8 Panles - Special L-shaped

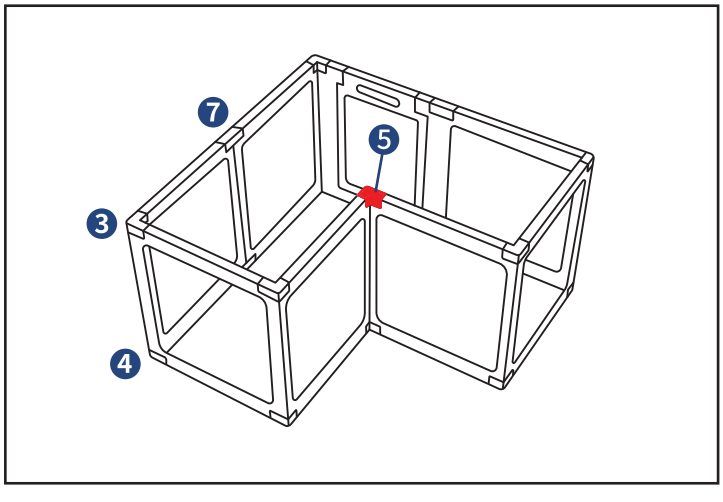

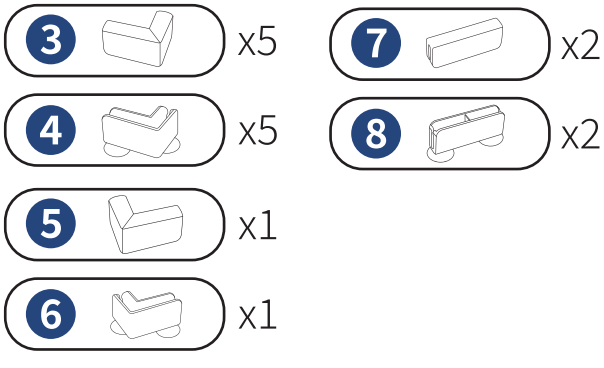

Note: Please note that the red connector is ⑤-Reverse L-shaped Connector, which is installed in the opposite direction compared to most standard corner connectors.

INSTALLATION

10 Panles

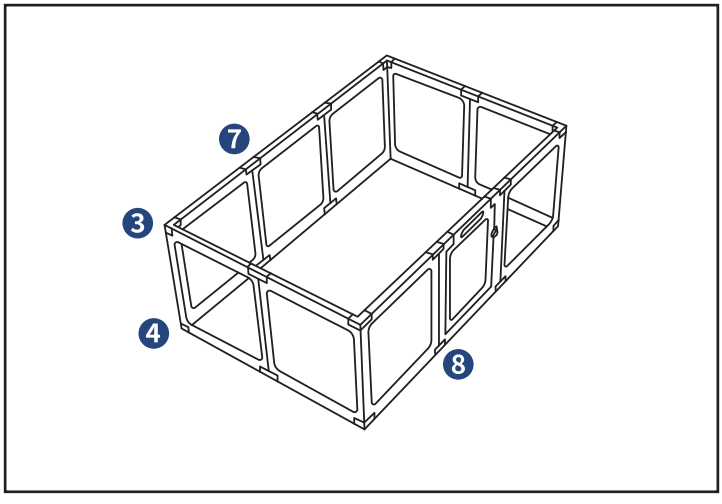

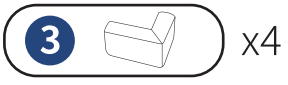

x4

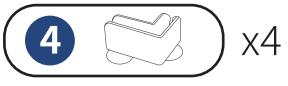

x4

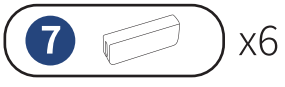

x6

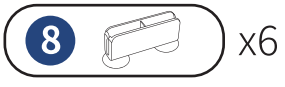

x6

12 Panles - 2 Room

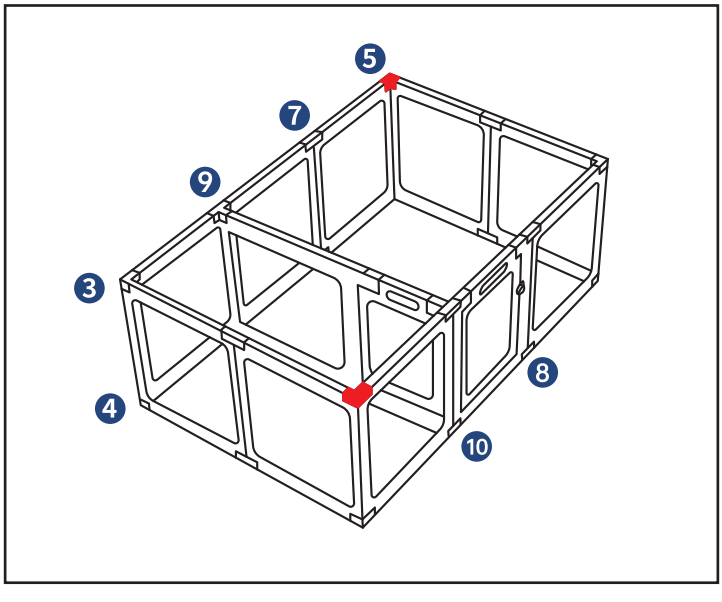

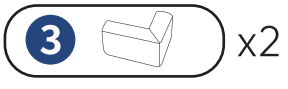

x2

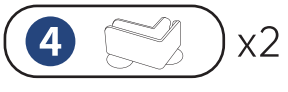

x2

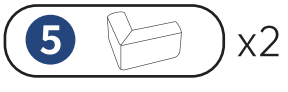

x2

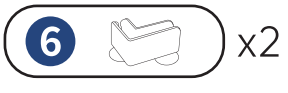

x2

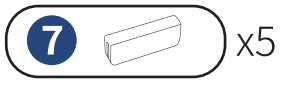

x5

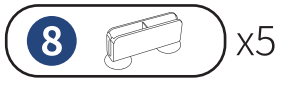

x5

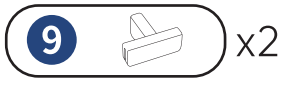

x2

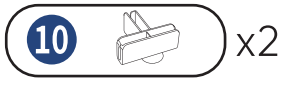

x2

Note: Please note that the red connector is ⑤-Reverse L-shaped Connector, which is installed in the opposite direction compared to most standard corner connectors.

Dear Customer

- Thank you for choosing our product! We greatly value your support and hope you are satisfied with your shopping experience.
- If you have any questions or need assistance,please feel free to contact our customer service team at Amazon.
- Thank you again for your purchase, and we hope you enjoy using our product!

Best Regards

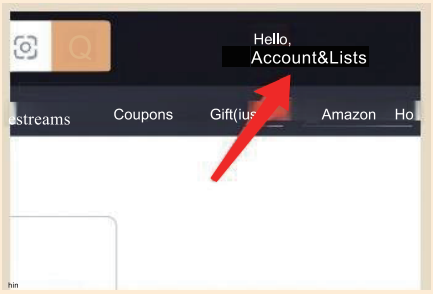

1.Please Login In Your Account And Click "Your Orders".

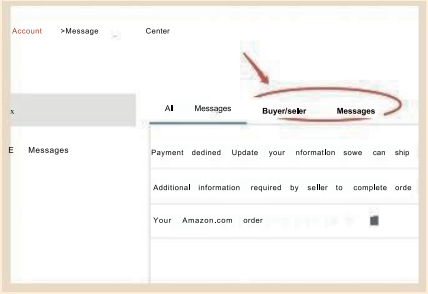

2.Find Your Order And Click "View Your Item".

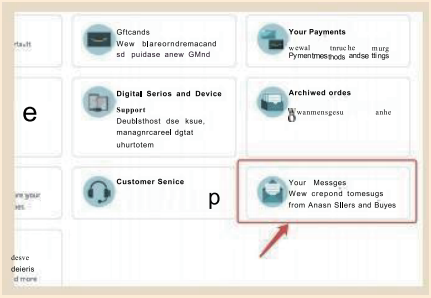

3.Click "Contact Seller" To Reach Us.

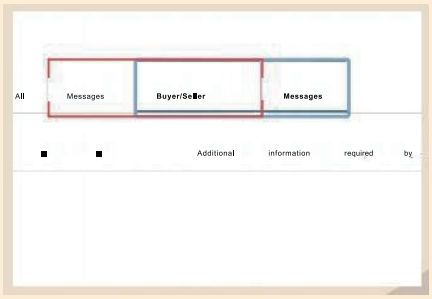

4.Choose "An Order I Have Placed" And Then Tell Us Your Concern.

THANK U