ASSEMBLY INSTRUCTION

DARK BRONZE FINISH METAL AND WOOD KITCHEN CART

A Leg	B Top panel	C Bottom panel	D Wine rack
	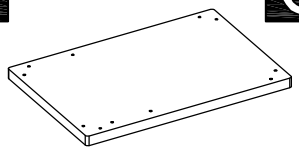	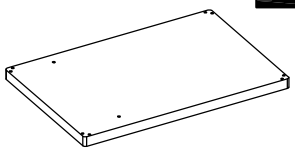	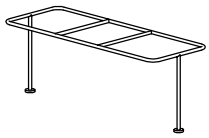
4 pcs	1 pc	1 pc	1 pc
E Wine glass holder	F Bolt	G Bolt	H Washer
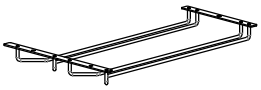		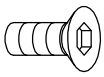	
1 pc	5 pcs	16 pcs	4 pcs
I Suction cup	J Wheel	K Open end wrench	L Allen wrench
		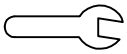	
2 pcs	4 pcs	1 pc	1 pc

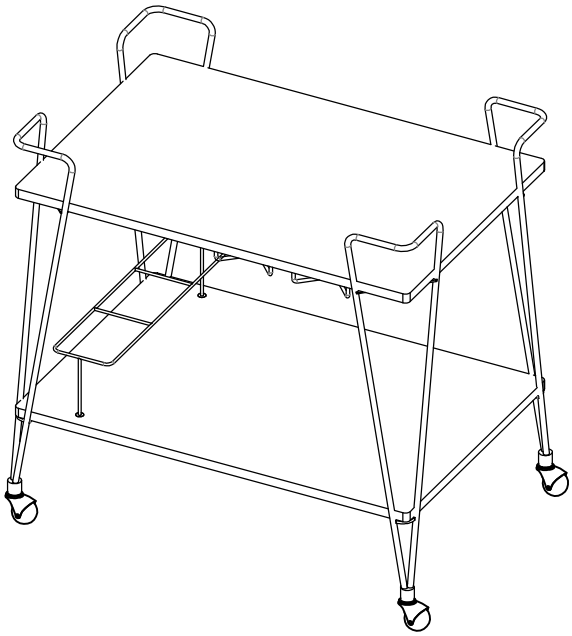

This page lists all the contents included in the box. Please take the time to identify the hardware as well as the individual components to this product. As you unpack and prepare for assembly, place the contents on a carpeted or padded area to protect them from damage.

1

Install wine rack (D) on the bottom panel (C) with bolt (F) and washer (I) the fasten it up by use of Allen wrench (L).

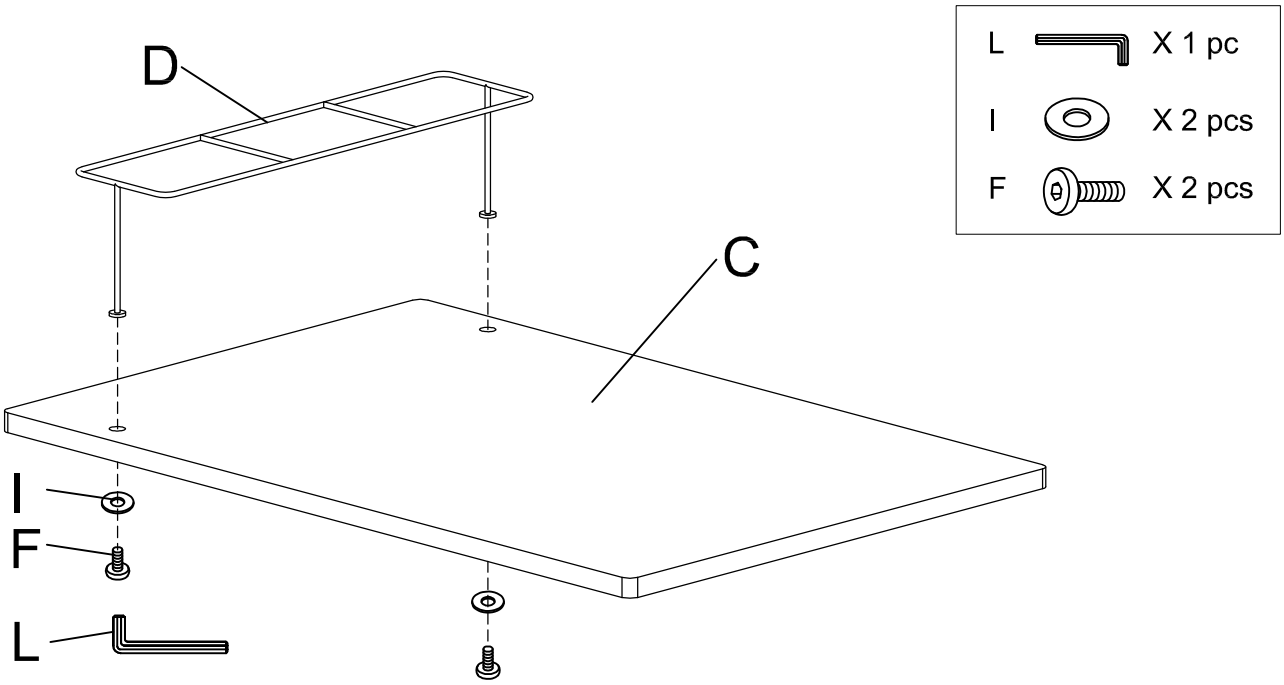

2

Install wine glass holder (E) on the back side of top panel (B) with bolt (F) and tighten by Allen wrench (L).

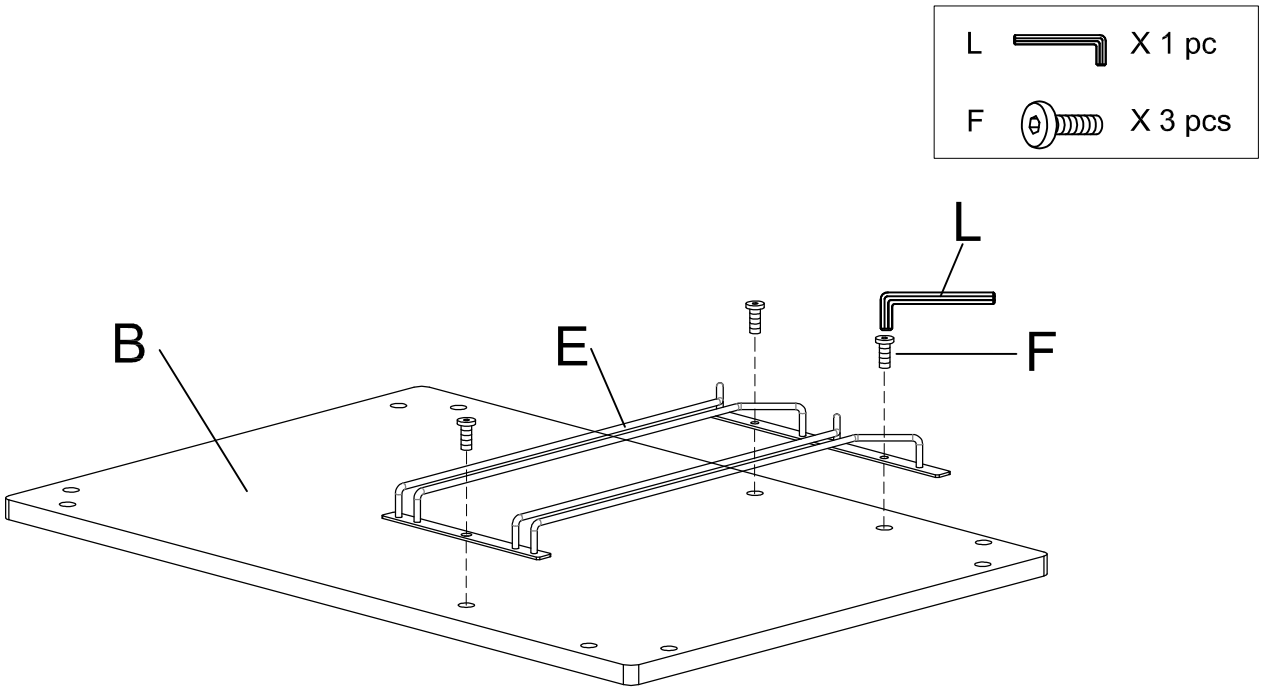

3

Assemble leg (A) and top panel (B) with bolt (G) and tighten by Allen wrench (L) as shown in drawing.

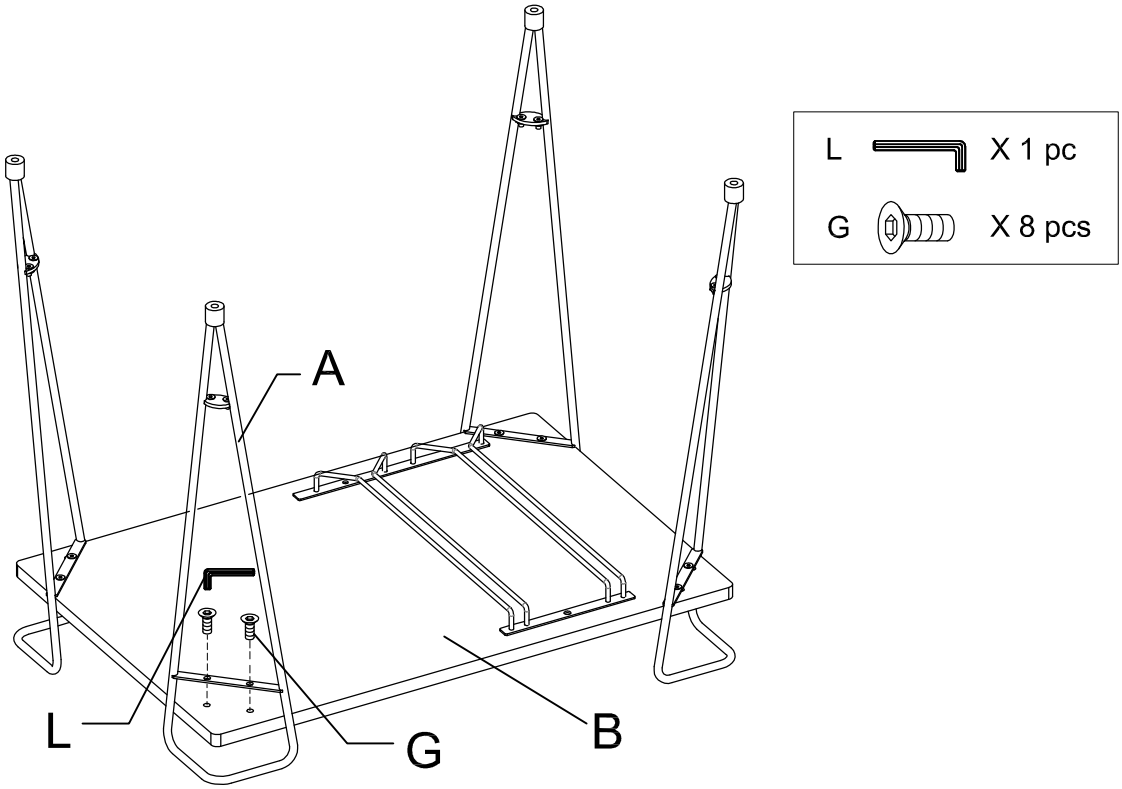

4

Assemble bottom panel (C) to the sub assembled top panel (B) and leg (A) with bolt (G) as shown in drawing and then tighten up by use of Allen wrench (L).

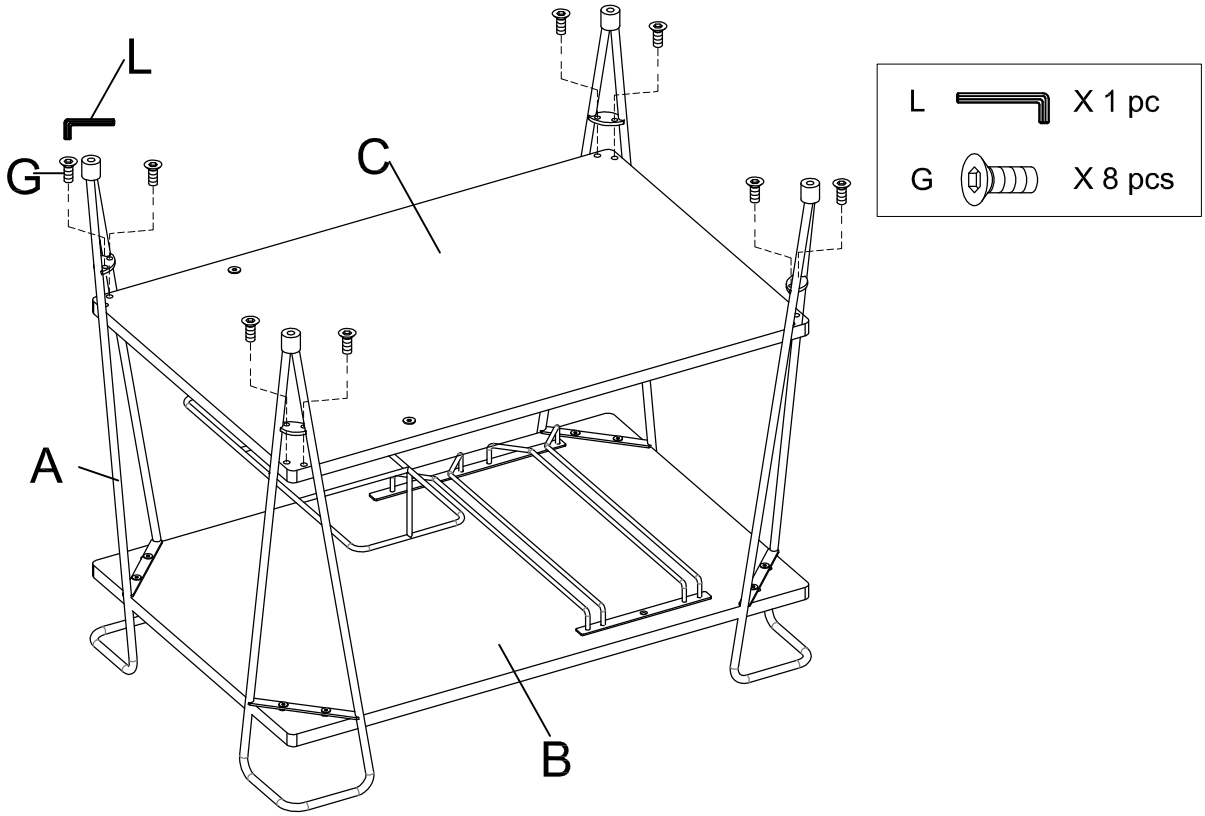

5 Install wheel (J) into the tube end of leg (A) with washer (H) and tighten it up by use of open end wrench (K).

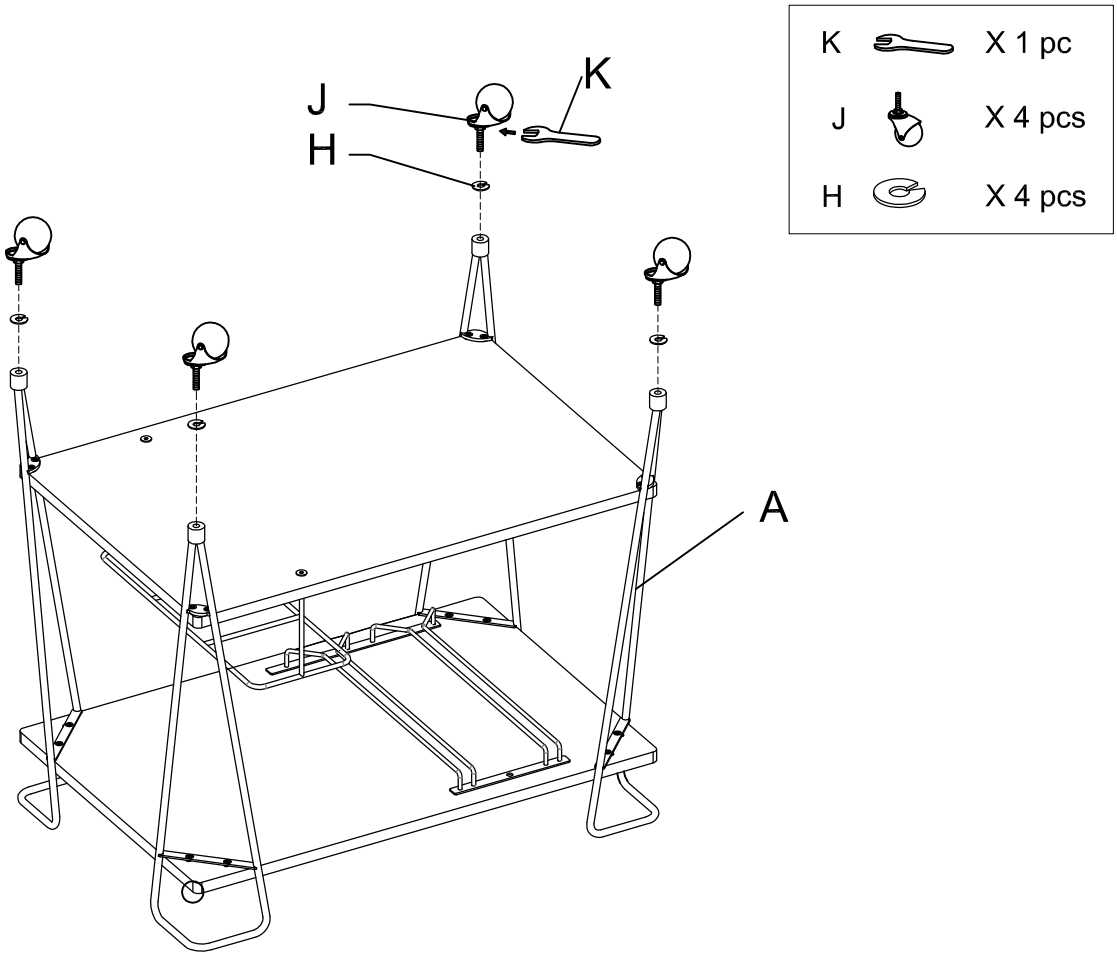

Cleaning & Care

Treat surface with care. Surface is resistant to scratches but is not scratch resistant. Clean surfaces with a dry or damp soft cloth. Do not use abrasive cleaners. Hardware may loosen over time. Periodically check that all connections are tight.