MURI-48in

ASSEMBLY INSTRUCTIONS

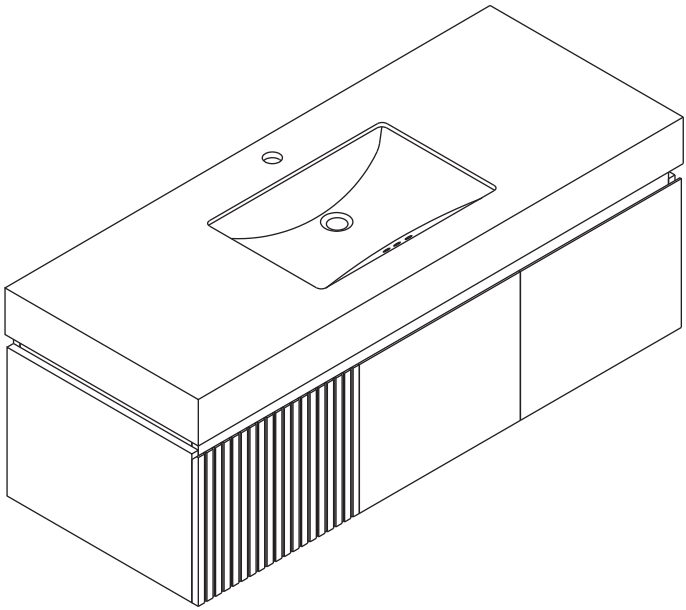

Your order will be shipped in multiple packages, and delivery times may vary.
We appreciate your patience and understanding.

Notice:

1.Follow the installation instructions. Please confirm all accessories are preset before installation.

2. Do not fully tighten the screws during initial assembly. Fully tighten screws only once all pieces which are correctly assembled.

3. If you encounter any problems during installation, please contact our customer service.

4. Please unbox the item from the side with an open-label and put a carpet on the foor to avoid scratching it.



Recommended installers : 2



Put a carpet on the floor before unpacking

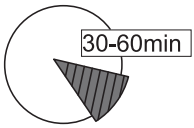

Estimate installation time: 30 minutes

Item no.	Reference Image	Qty
A	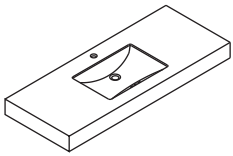	x1
B	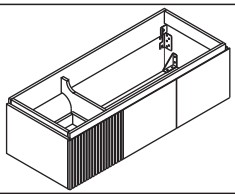	x1
1		x4
2		x4

Item no.	Reference Image	Qty
3	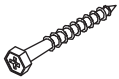	x4
4	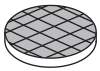	x6

1

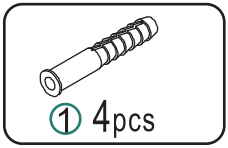

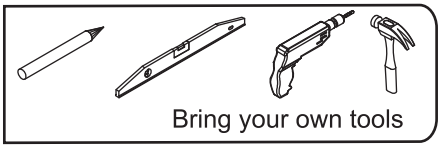

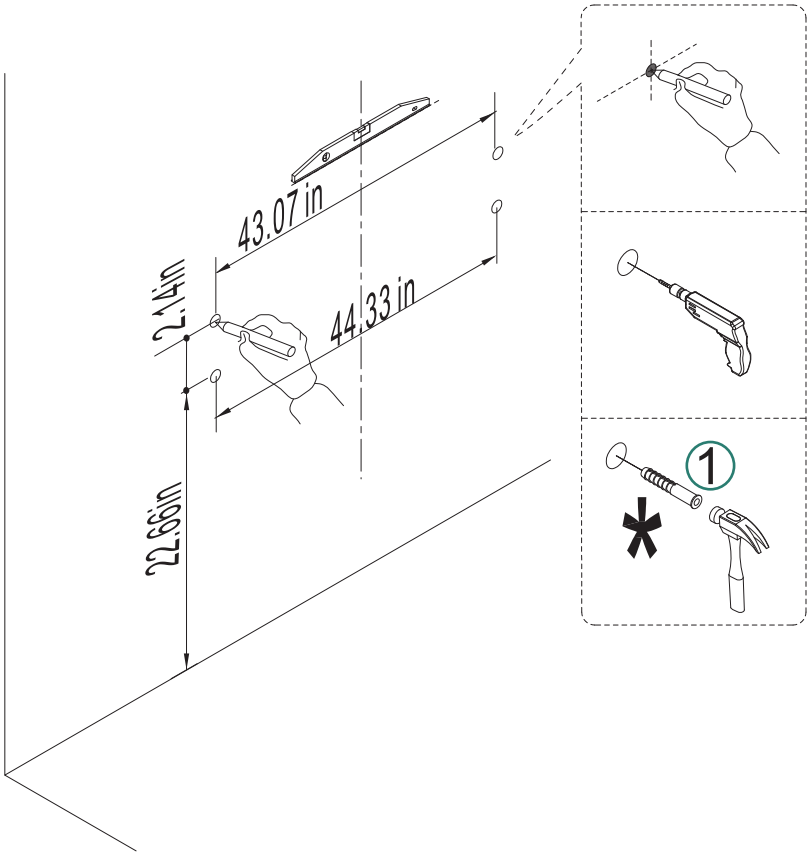

2

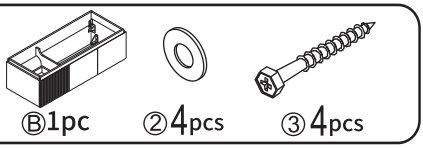

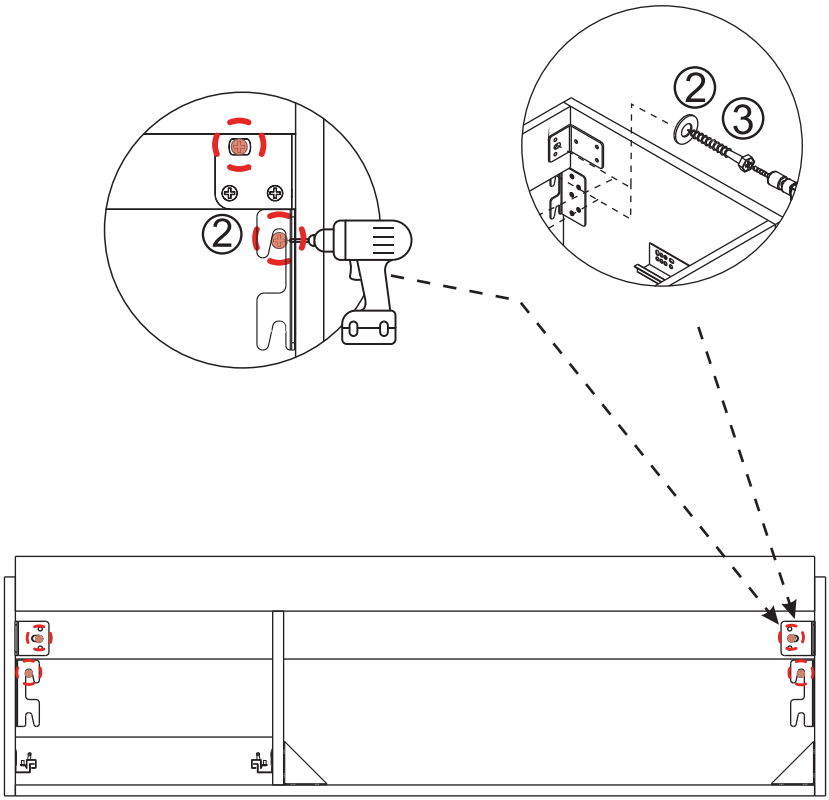

3

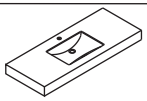

Ⓐ1pc

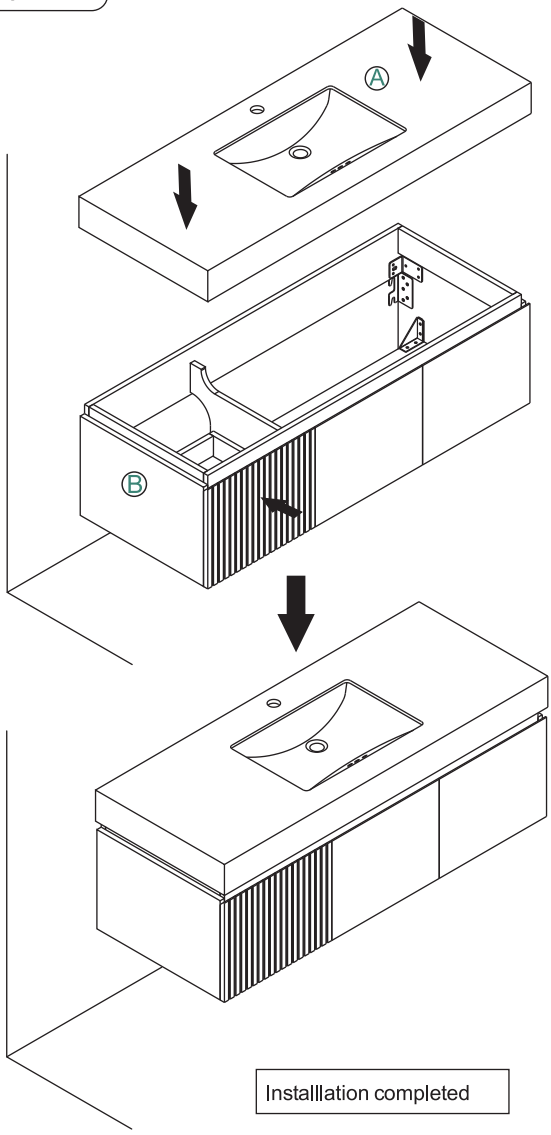

4

Installation of drain assembly

Turn the screw at the bottom of the guide rail counterclockwise!

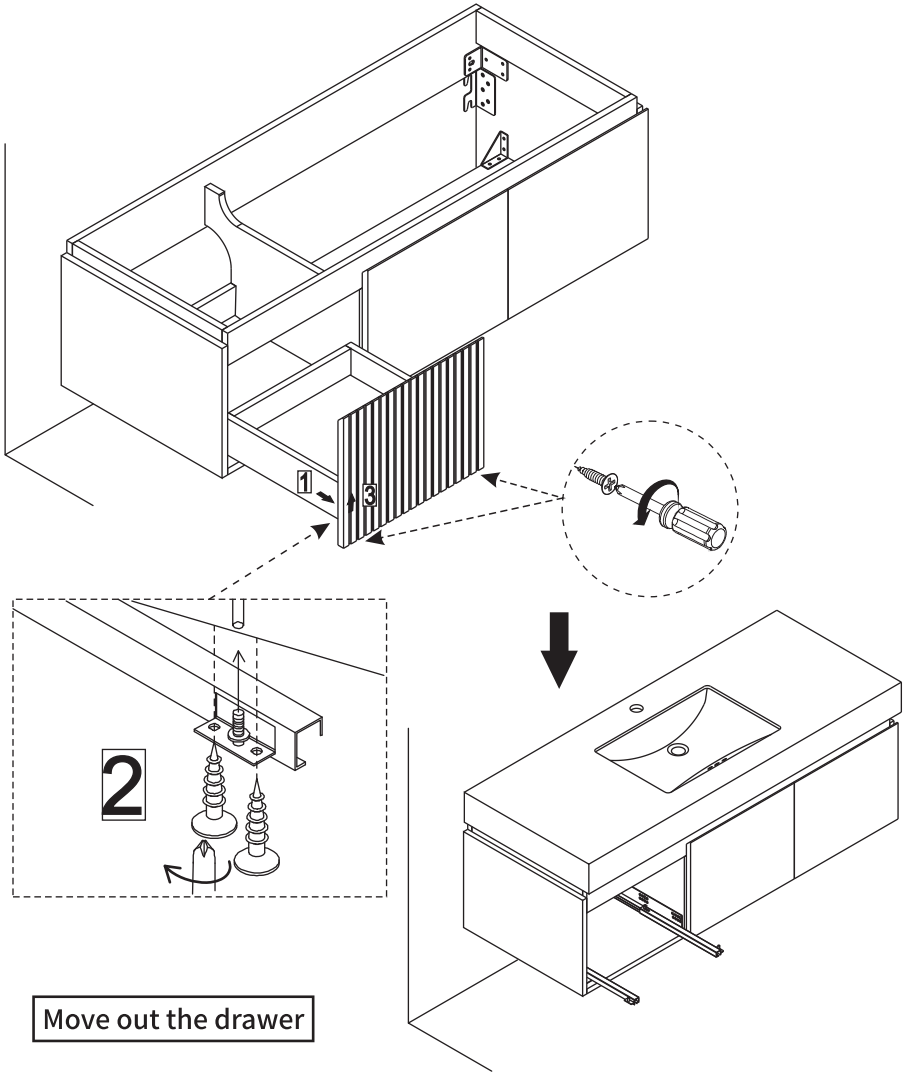

Move out the drawer

5

④6pcs

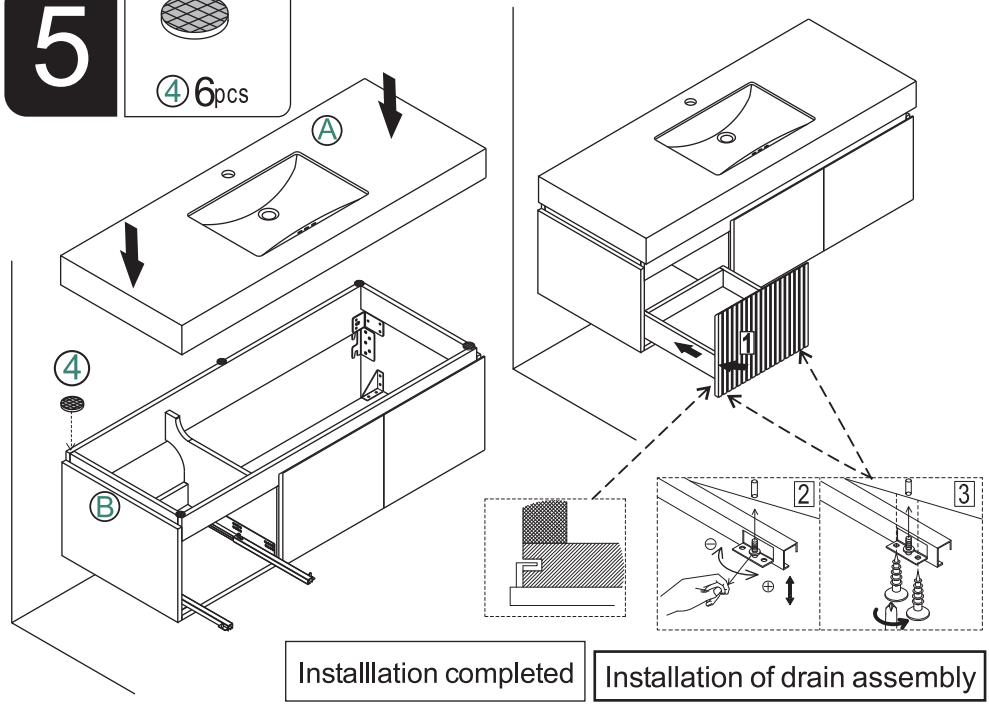

Installlation completed

Installation of drain assembly

Pop-up Waste Installation

STEP 1
Install Pop-up Waste with over flow.

STEP 2
Connect the drain pipe.

This product does not include faucet and drainage accessories. The content on this page is provided as installation suggestions only. Please carry out the installation according to the requirements of the product you actually purchased.

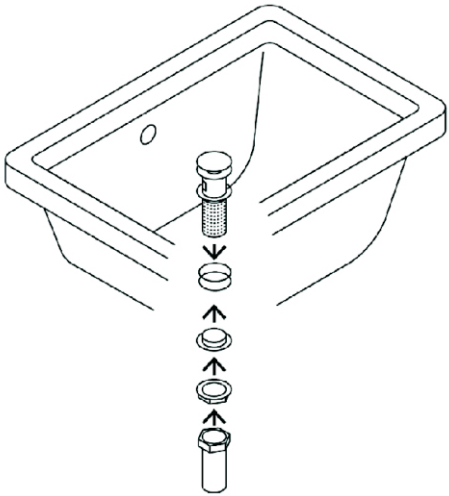

PIVOT-PRO side adjustment

Side adjustment of the door is made by using the indicated screw.

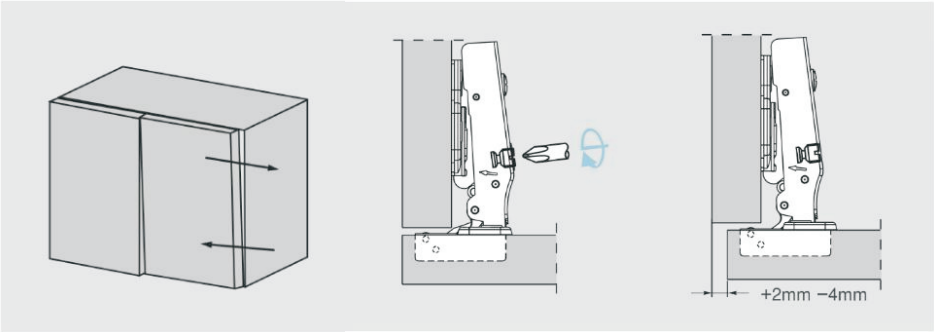

PIVOT-PRO Depth Adjustment

Depth adjustment is made without loosening any screw. The door can be moved in or outby rotating the cam adjuster on the hinge arm.

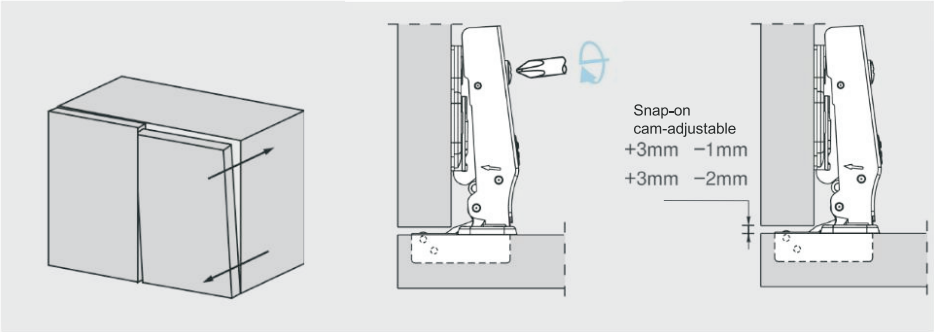

PIVOT-PRO Height Adjustment

By loosening the two fixing screws to allow the mounting plate to slide up or down ,the door can be adjusted vertically by ±2mm.After retightening the screws, the Depth adjustment is done.

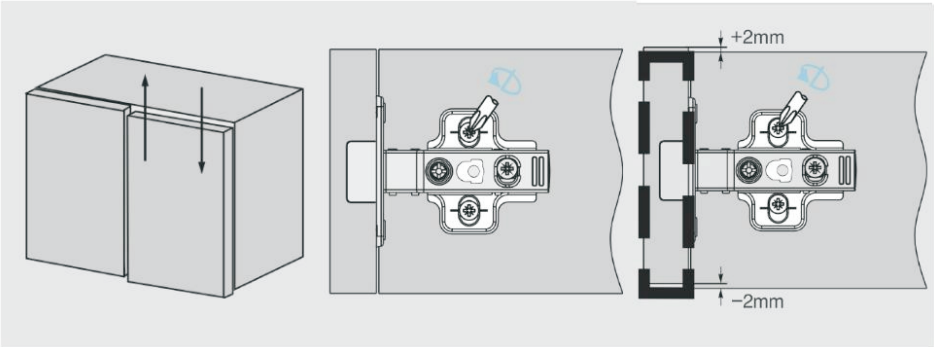



D2101
size:535 × 375 × 215mm



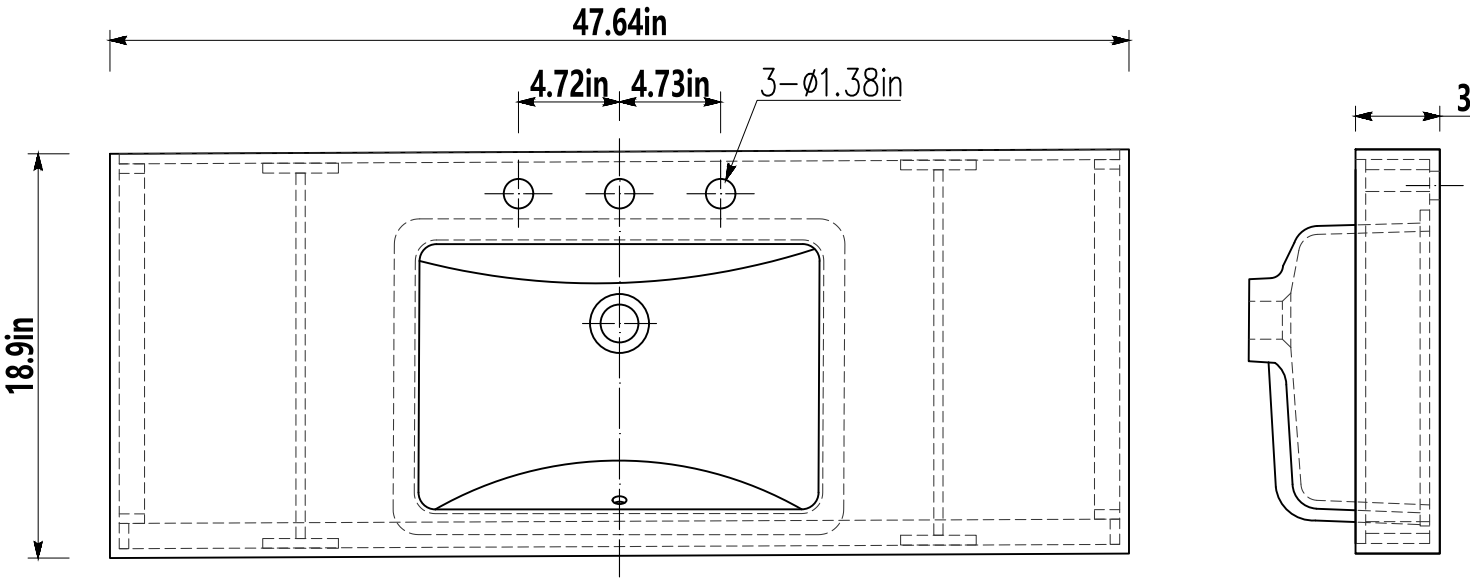

MURI-48in

MURI-48in

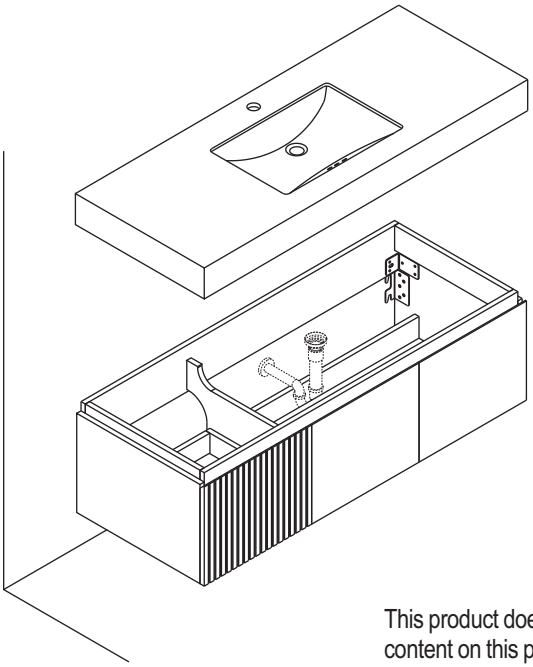

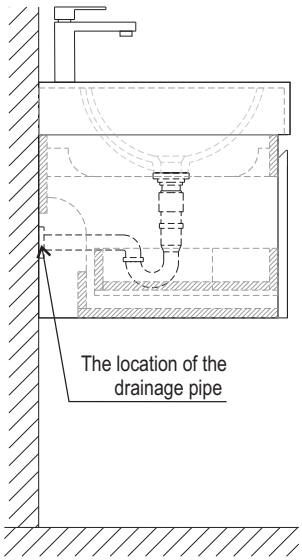

This product does not include drainage accessories. The content on this page is provided as installation suggestions only. Please carry out the installation according to the requirements of the product you actually purchased.

