Installation Instruction

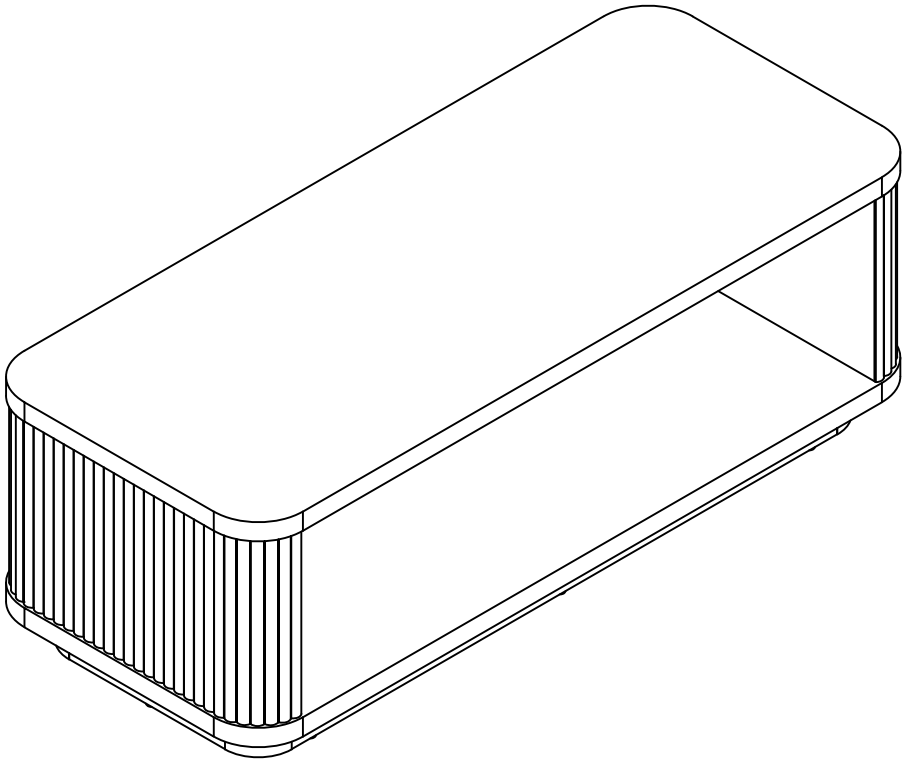

Assembling

What you need

- Use the packaging carton as a working surface to prevent product damage during assembly
- Phillips head screwdriver

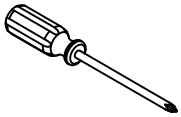

Weight Limitation



100 lbs table top | 35 lbs per

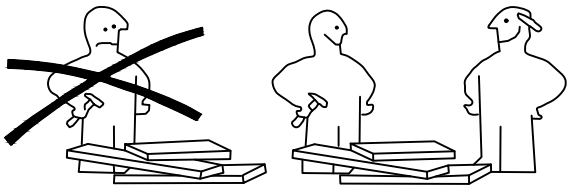

What' included

Code	Description	Qty
A	Cam Bolt M6X35MM	30
B	Cam Lock 15X10MM	30
C	Wooden Dowel M8X30MM	8
D	Screw M4X40MM	12
E	Self-adhesive hole sticker	30
F	MATS	8

The Hardwares

Ⓐ

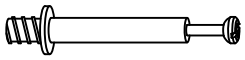

Ⓑ



Ⓒ



Ⓓ

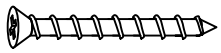

Ⓔ

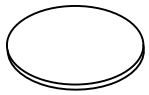

Ⓕ

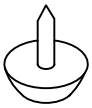

IMPORTANT:
1.Do not tighten bolts / screws completely until all bolts / screws are lined up and inserted into holes.
2.Do not over tighten screws and bolts to avoid stripping
3.You can use a screwdriver. Power tools can also be used. (Be careful with power tools)

Included Accessories

Code	Description	Qty
1	Cabinet Top	1
2	Bottom Panel	1
3	Side panel	2
4	Foot front and rear connecting plates	2
5	Arc-shaped connecting plate	4
6	Foot left and right connecting plate	2

The Accessoriess

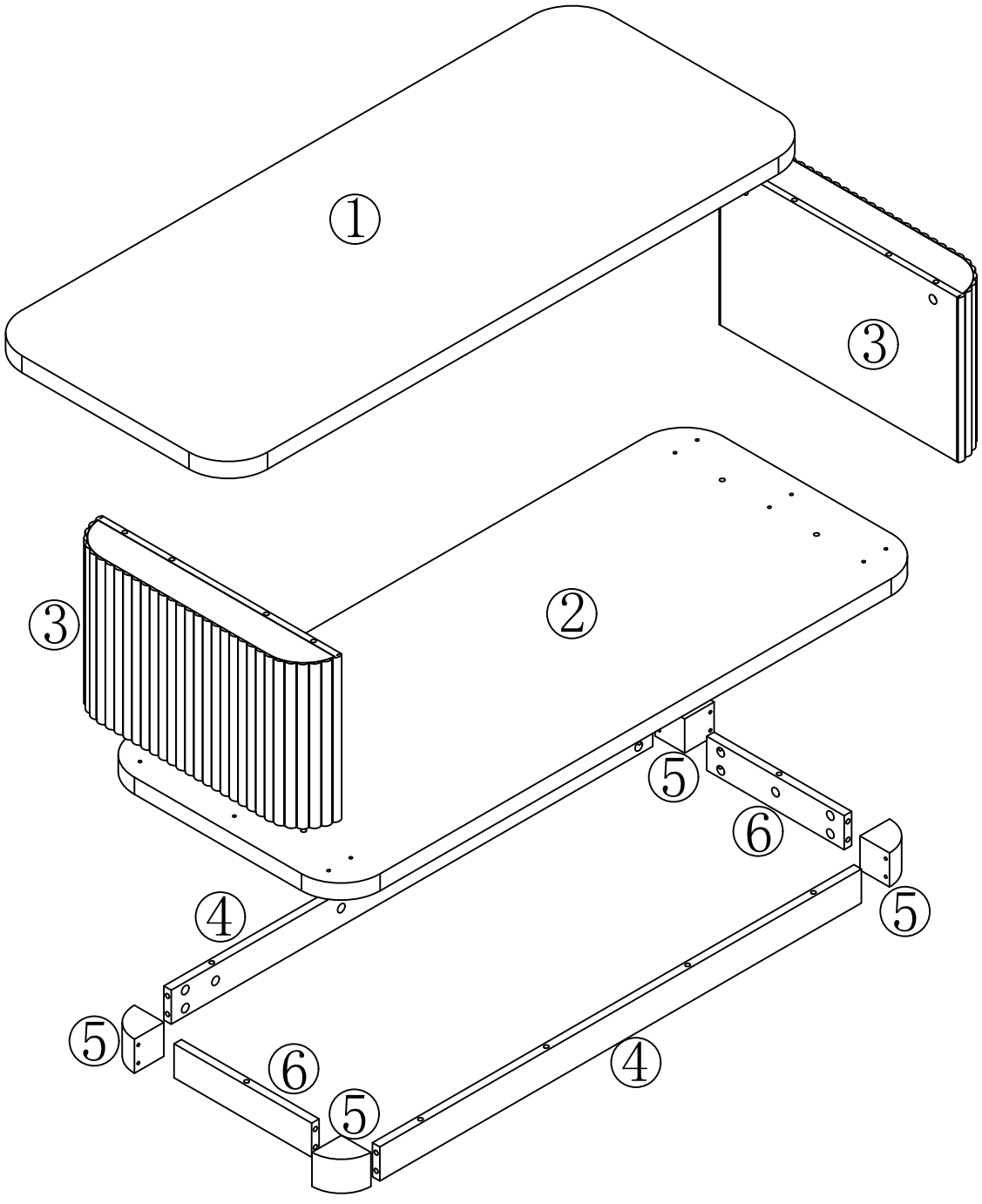

Step 1

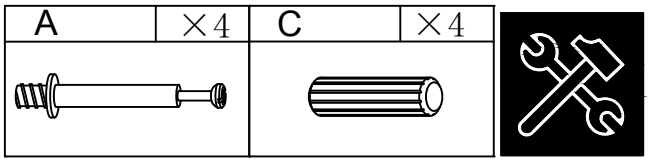

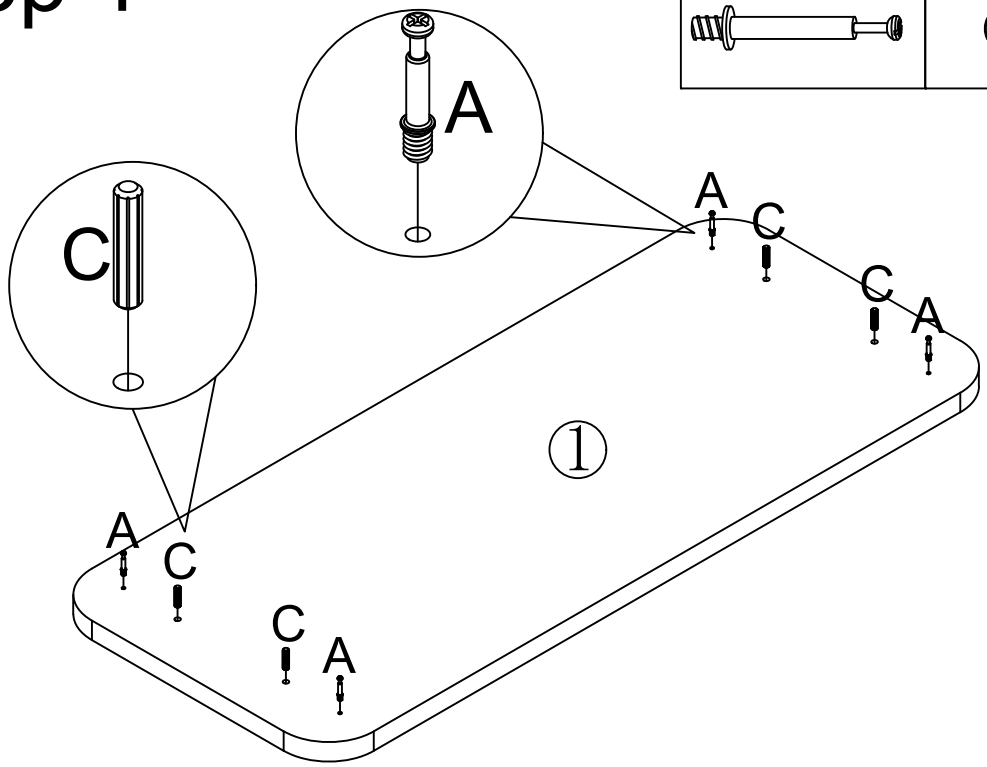

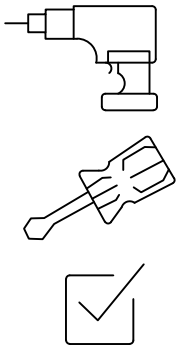

Step 2

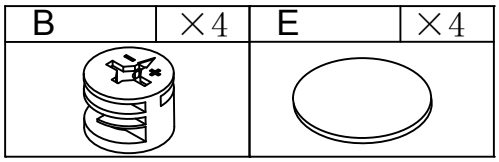

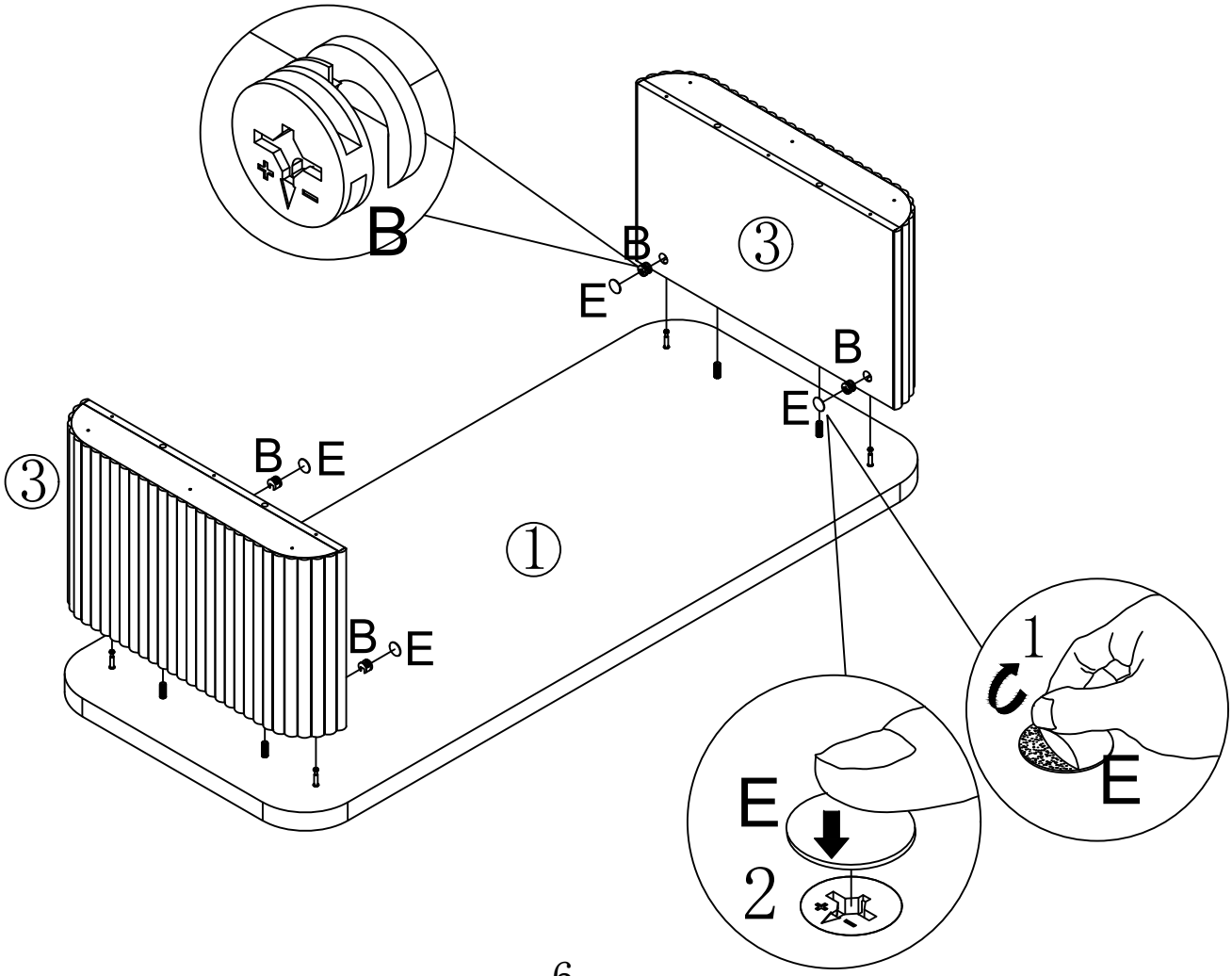

Step 3

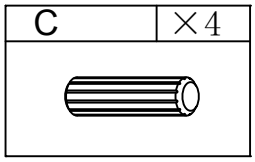

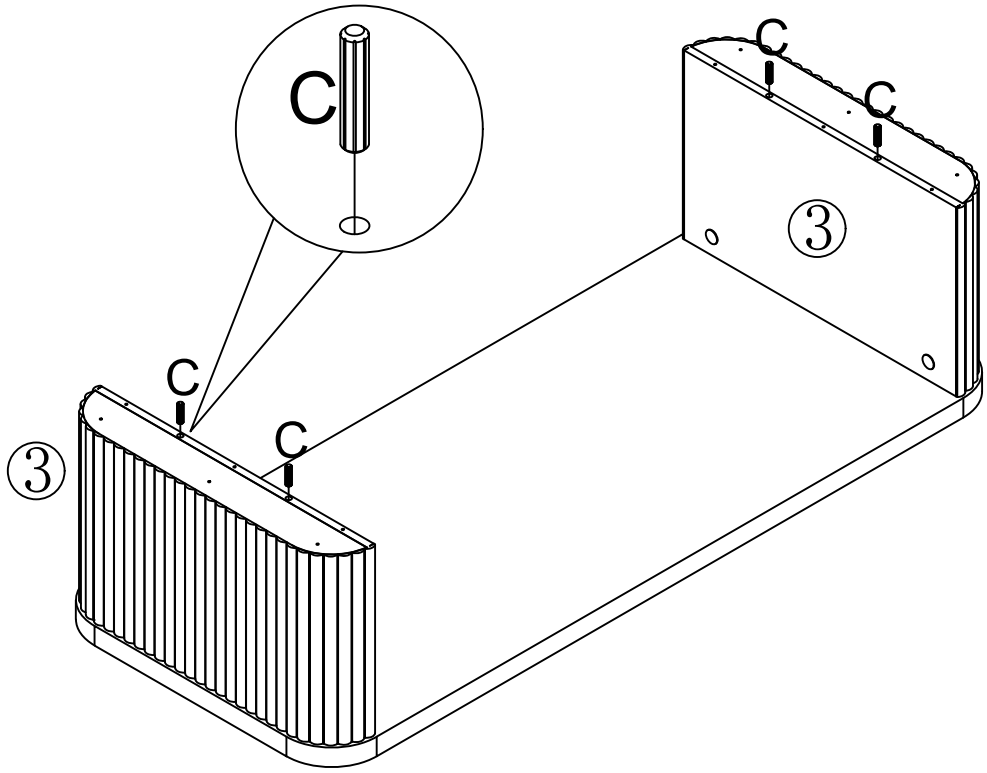

Step 4

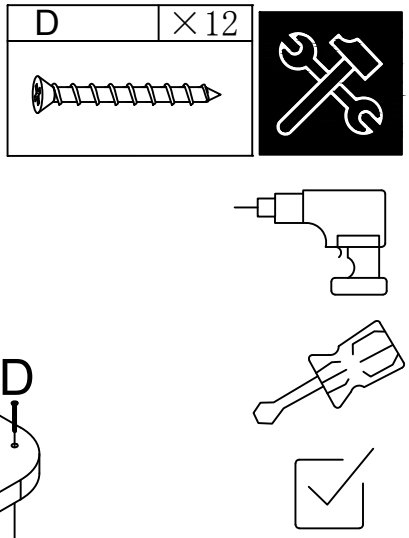

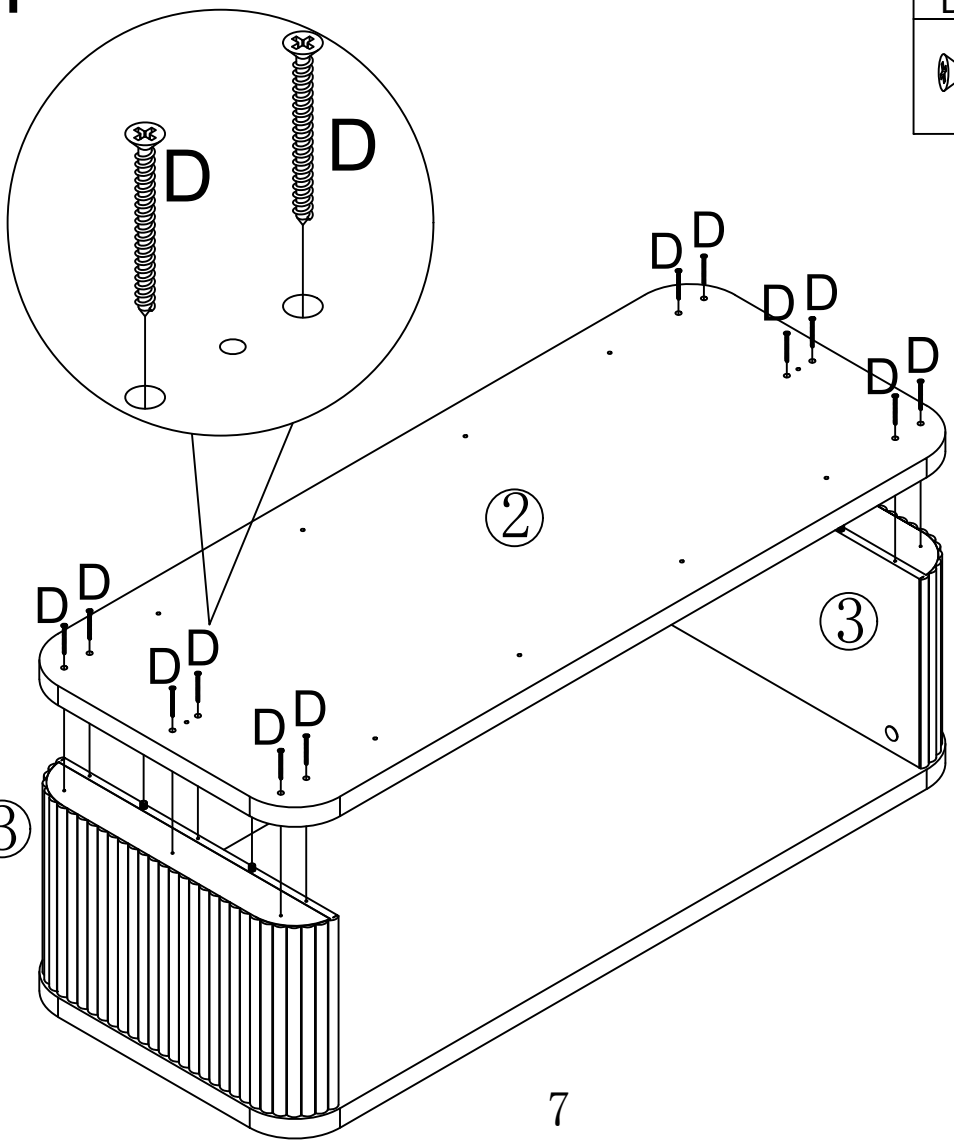

Step 5

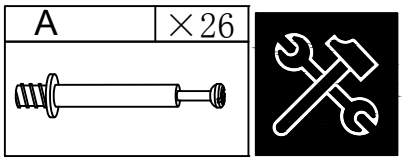

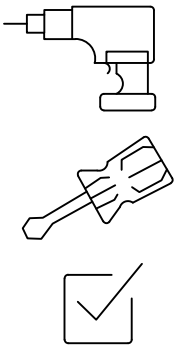

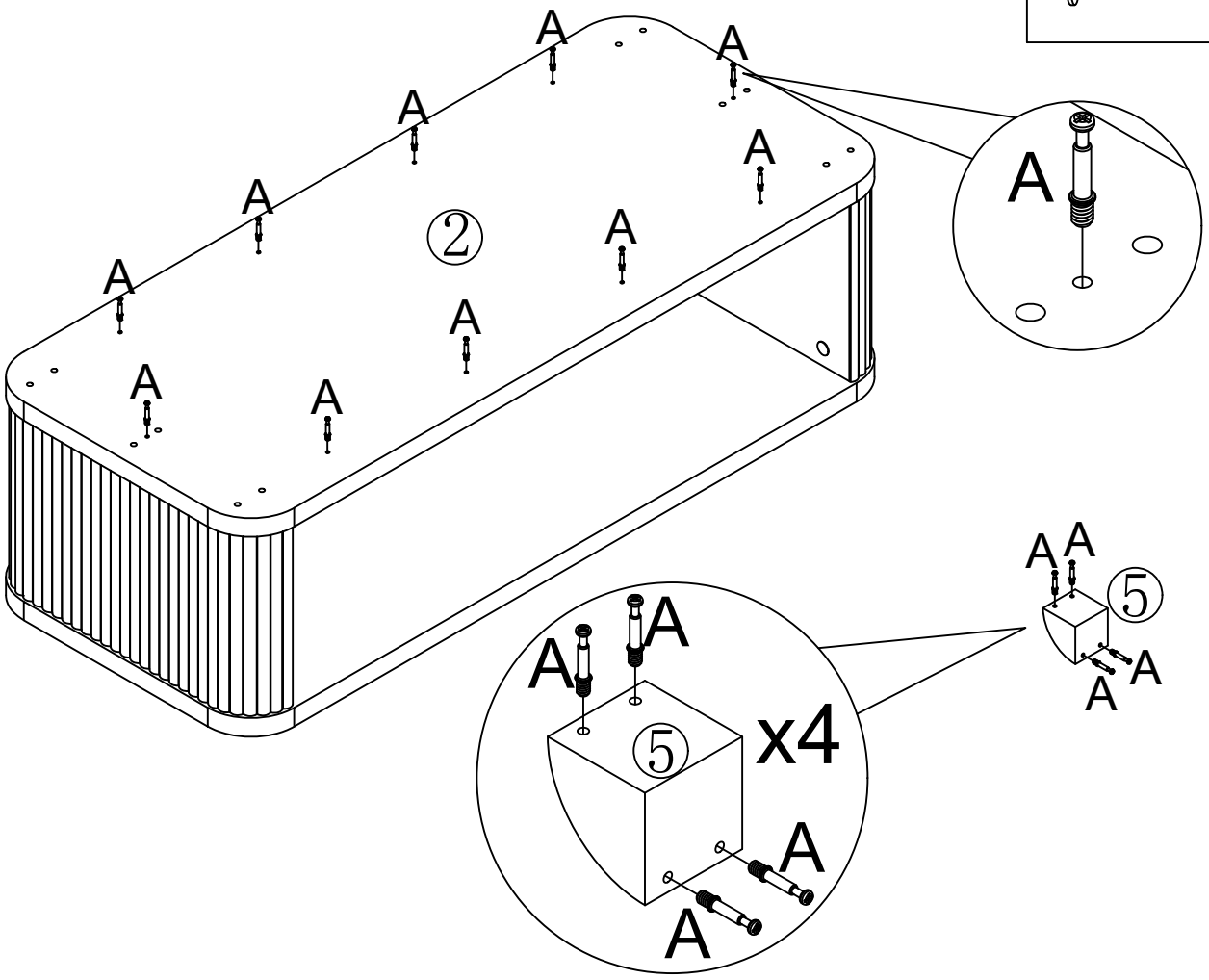

Step 6

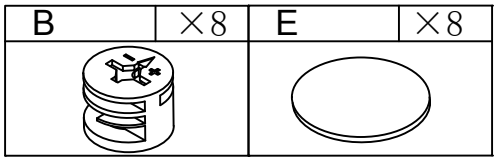

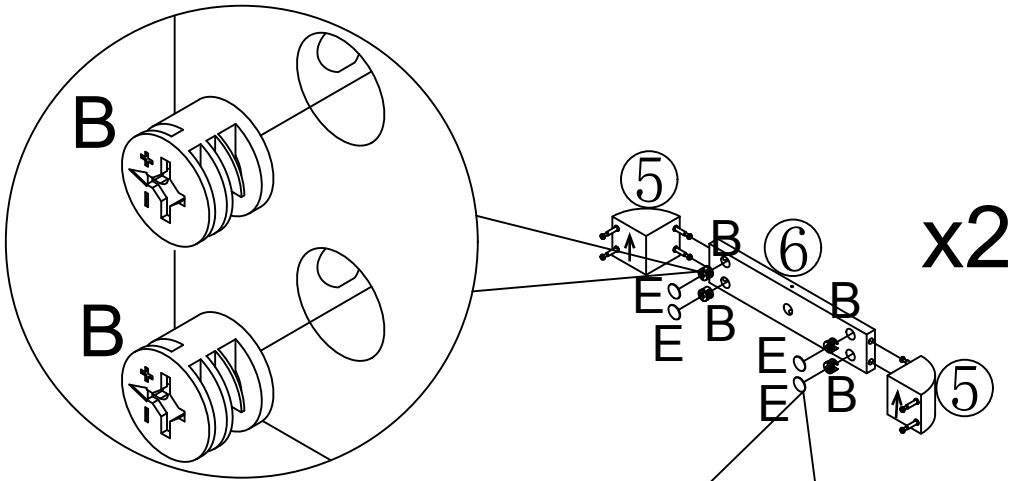

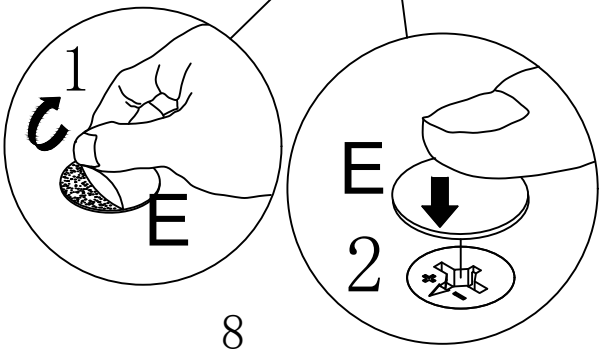

Step 7

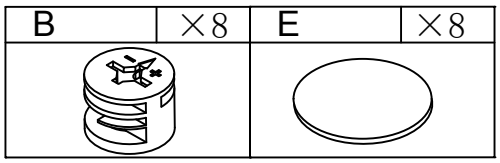

Step 8

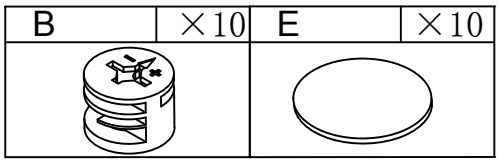

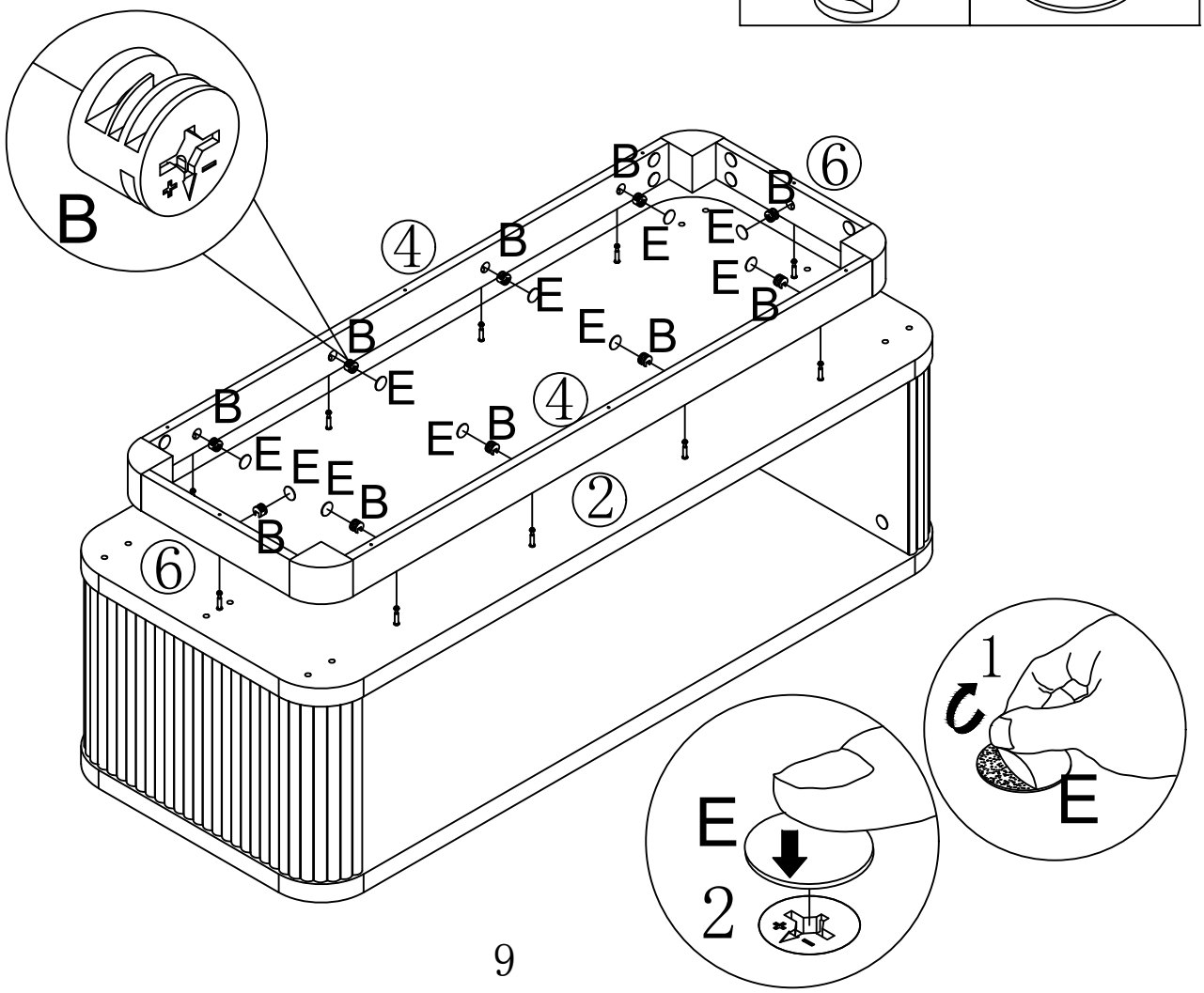

Step 9

F	×8

