USER MANUAL

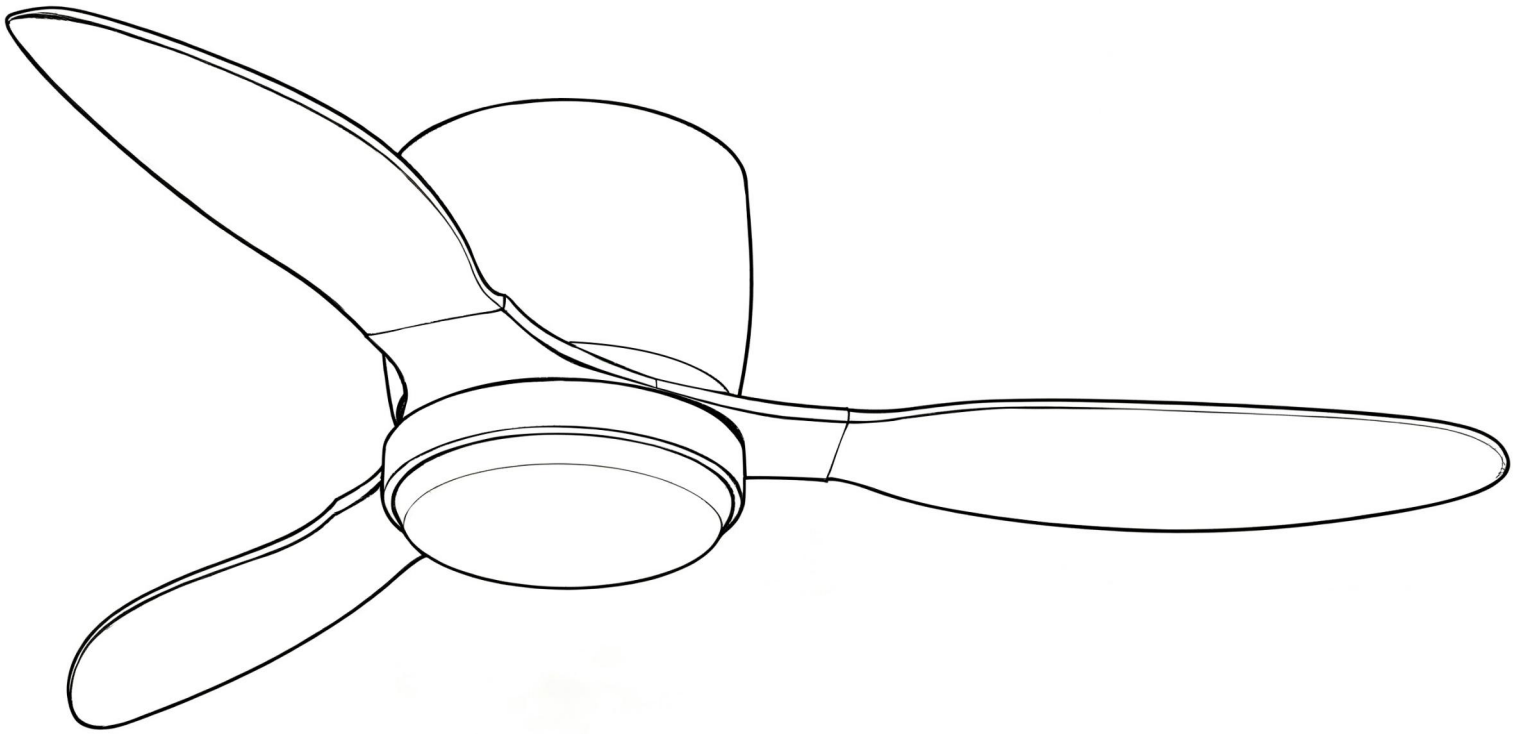

THANK YOU

We appreciate the trust and confidence you have placed in our product. We strive to continually create quality products designed to enhance your home.

WE ARE HERE TO HELP!

This Instruction Manual is designed to make installation as simple as possible. While working through this Instruction Manual, keep your smartphone or tablet nearby. We have added video links to help you through the more technical sections. If you are unfamiliar or uncomfortable with wiring, contact a qualified electrician.

IMPORTANT SAFETY INFORMATION

1. To reduce the risk of electric shock, shut off power at the circuit breaker or fuse box before starting any installation work.
2. All wiring must comply with the National Electrical Code (NEC, ANSI/NFPA 70) and local electrical codes. All electrical work must be completed by a licensed, qualified electrician. If you have no wiring experience, please hire a professional electrician.
3. The outlet box and supporting structure must be firmly mounted and able to support a minimum weight of 35 lbs (15.9 kg). Only use UL-listed outlet boxes marked "Acceptable for Fan Support, 35 lbs Max".
4. The fan must be mounted with a minimum of 7 ft. (2.1 m) of clearance from the trailing edge of the blades to the floor.
5. Never place any objects into the path of moving fan blades.
6. Use extra caution when working around or cleaning the fan to avoid personal injury or damage to the unit.
7. Check all set screws and retighten them securely before finishing installation.
8. Wiring diagrams are for reference only. Any optional light kit not originally packaged with this fan must be UL-listed and marked compatible with this fan.
9. Not Recommended for direct mounting on bare drywall/ plasterboard.Drywall cannot support unit weight and vibration. For drywall ceilings, fasten only to structural joist or heavy-duty bracket behind panel. Improper mounting may cause fixture to fall.

WARNING: To reduce the risk of personal injury, do not bend the blade brackets (also referred to as flanges) during assembly or after installation. Do not insert objects in the path of the blades.

WARNING: To avoid possible electrical shock, turn the electricity off at the main fuse box before wiring. If you feel you do not have enough electrical wiring knowledge or experience, contact a licensed electrician..

WARNING: To reduce the risk of fire, electric shock or personal injury, mount to outlet box marked "Acceptable for fan support of 35 lb (15.9 kg) or less", and use screws provided with the outlet box.

WARNING: Electrical diagrams are for reference only. If you are using a light kit, refer to the light kit instruction manual to make the electrical connections. Optional use of any light kit shall be UL-listed and marked suitable for use with this fan.

WARNING: To reduce the risk of electric shock, this fan must be installed with an isolating wall switch.

WARNING: To reduce the risk of fire, electric shock or injury to persons, do not use replacement parts that have not been recommended by the manufacturer (e.g. parts made at home using a 3D printer).

WARNING: To reduce the risk of personal injury, use only the screws provided with the outlet box.

CAUTION: To avoid personal injury or damage to the fan and other items, use caution when working around or cleaning the fan.

TOOLS REQUIRED

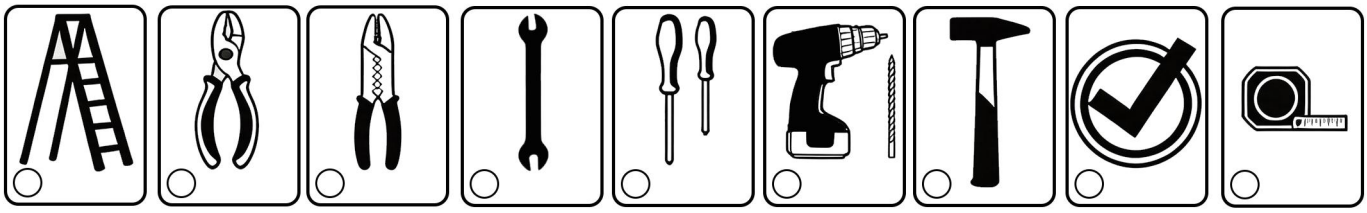

HARDWARE INCLUDED

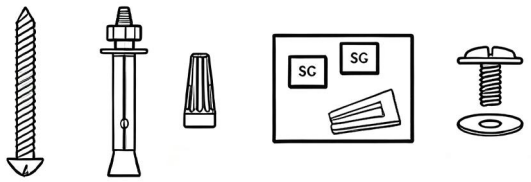

A B C D E

NOTE:Hardware not shown to actual size	
Part	Description
A	Mounting Screws
B	Expansion Bolts
C	Wire Nuts
D	Balance Kit
E	Blade Attachment Screw and Fiber Washer

WIRING & INSTALLATION

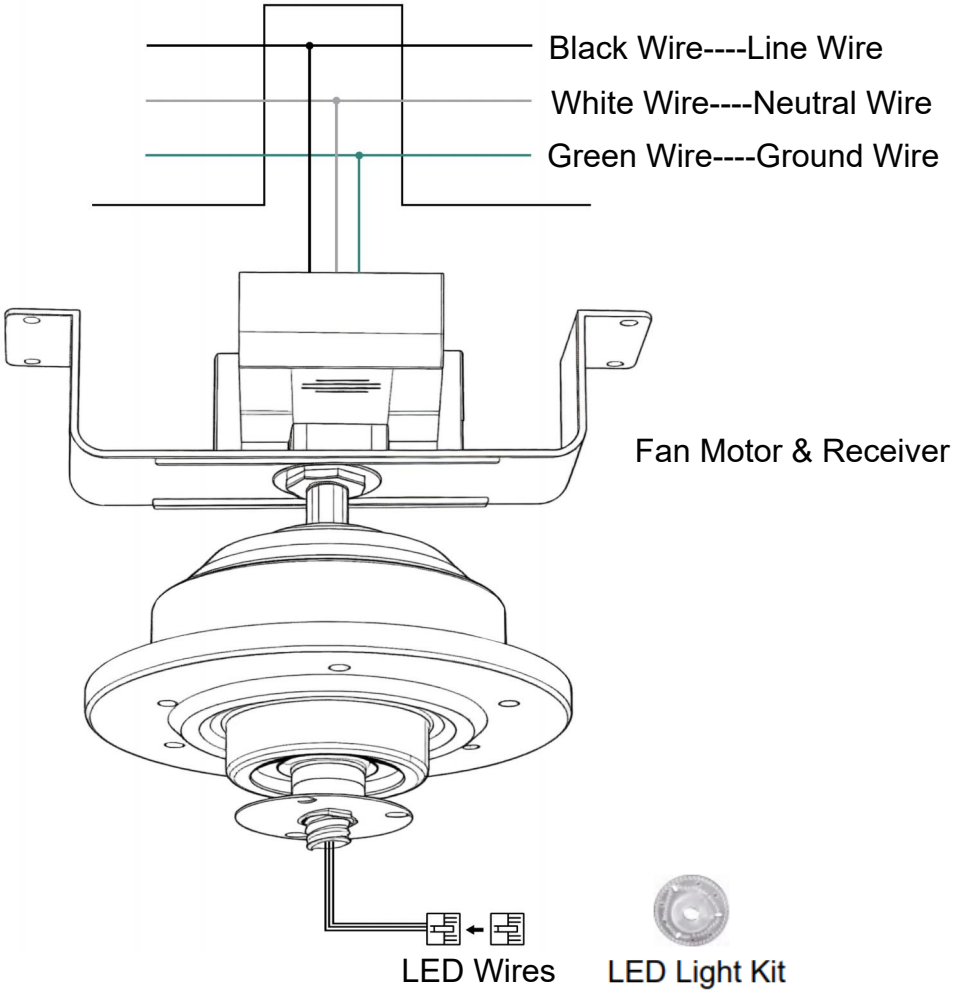

PACKAGE CONTENTS

① Mounting Plate

② Fan Motor Assembly & Mounting Bracket

③ Receiver

⑨ Acrylic Shade

④ Motor Housing

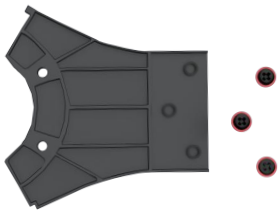

⑤ Blade Arm

⑩ Remote Control

⑥ Blade

⑦ LED Kit Pan

⑧ LED Light Kit

PREPARATION FOR INSTALLATION

WARNING: To reduce the risk of fire, electric shock or personal injury, mount to an outlet box marked "Acceptable for fan support of 35 lb (15.9 kg) or less", and use screws provided with the outlet box. An outlet box commonly used for the support of lighting fixtures may not be acceptable for fan support and may need to be replaced. If in doubt, consult a qualified electrician.

If your ceiling fan does not have an existing UL-listed mounting box, then install one using the following instructions:

- ☐ Disconnect the power by removing the fuses or turning off the circuit breakers.
- ☐ Secure the outlet box directly to the building structure. Use the appropriate fasteners and materials. The outlet box and support structure must be securely mounted and capable of reliably supporting a minimum of 35 lb (15.9 kg). Use only UL-listed outlet boxes marked "Acceptable for fan support of 35 lb (15.9 kg) or less". Do not use a plastic outlet box.

INSTALLATION STEPS DIAGRAM

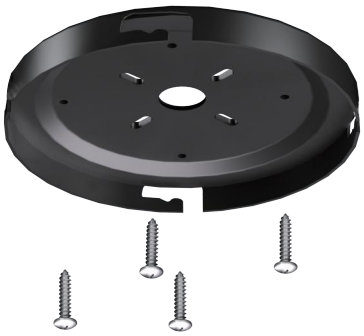

Step 1

Secure the mounting plate to the structural ceiling using the 4 screws provided (Screw A)

Step 2

Unscrew the screws holding the fan blades in place on the motor

Step 3

Assemble the three fan blades in order using screws (Screw E)

Step 4

Remove the four pre-installed screws from the mounting plate, then secure the motor to the mounting plate

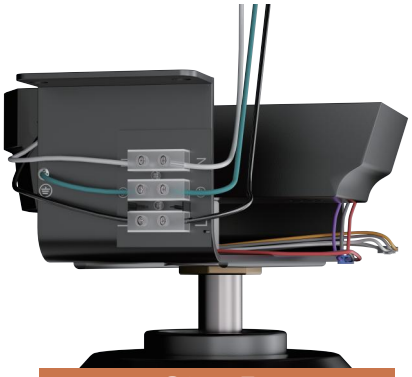

Step 5

Connect the receiver wires to the corresponding wires in the household: L, N, Ground

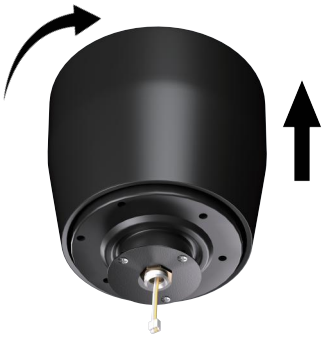

Step 6

Fit motor housing over motor, twist clockwise to lock onto bracket

Step 7

Align each fan blade with the motor holes using the screws from Step 2, then secure in order

Step 8

Secure the LED kit pan using the screws pre-installed on the motor

Step 9

Take the LED light kit and connect it to the cable below the motor

Step 10

Place the acrylic shade in position and rotate it until it clicks into place. Final assembly complete

REMOTE CONTROL MANUAL

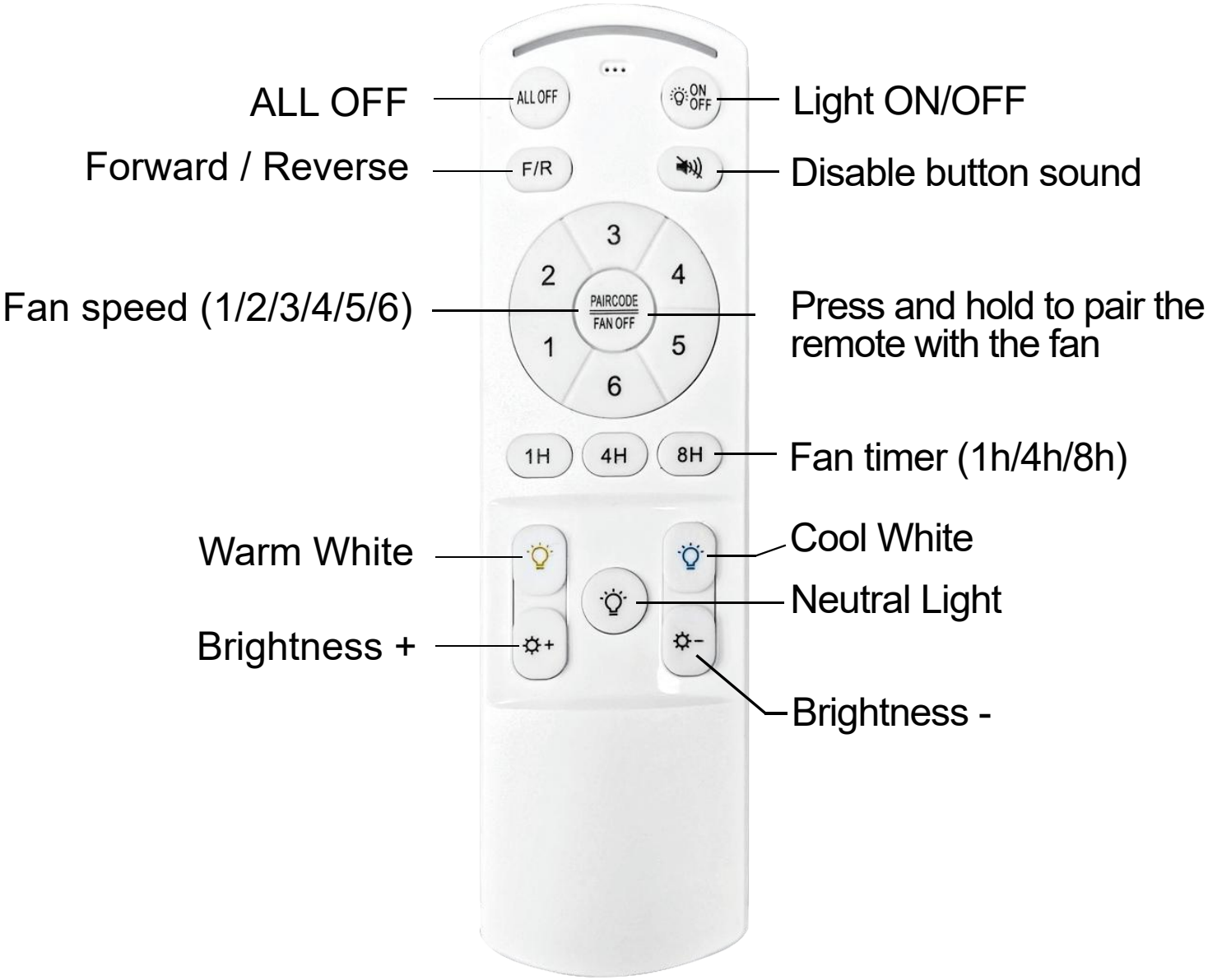

Smart WiFi Remote Control

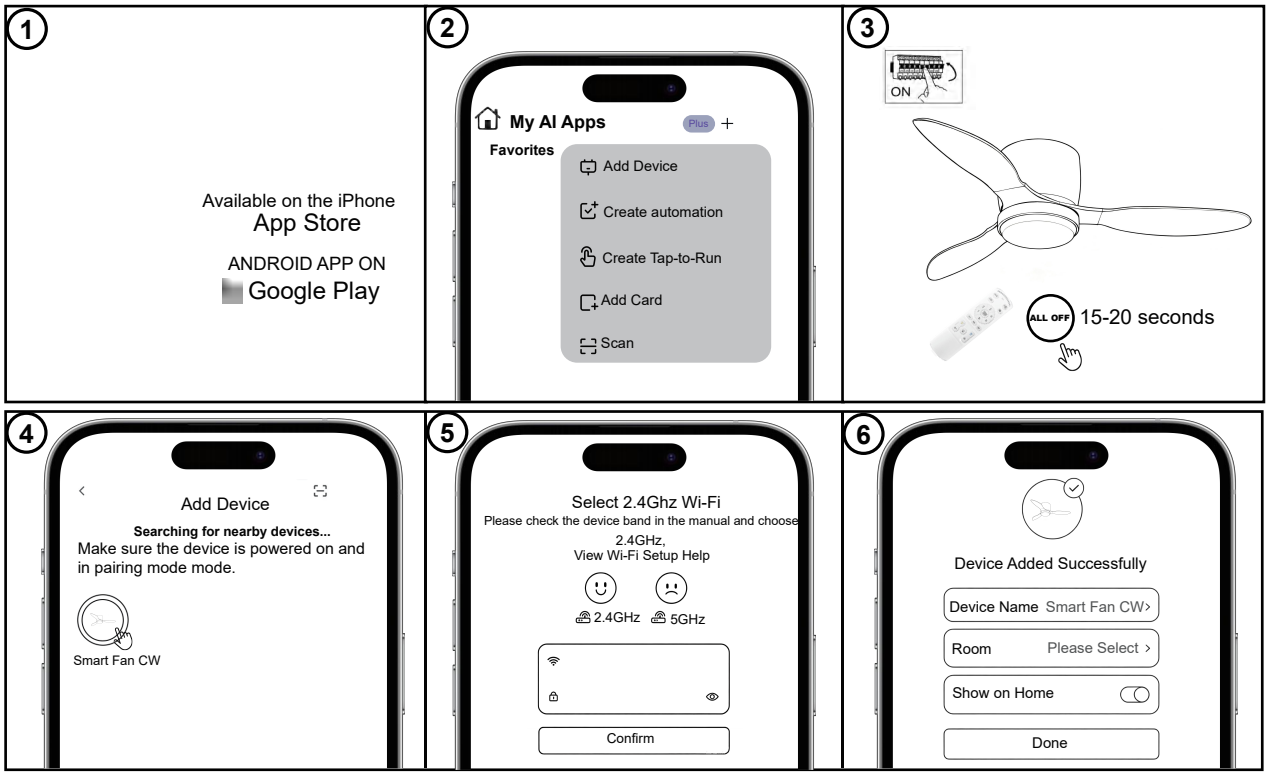

Pre-configuration Preparation

1. Network Requirements: This fan light only supports 2.4GHz WiFi (5G WiFi is not supported). Connect your phone to the 2.4GHz network before pairing. For dual-band routers, disable the 5G band or enable a standalone 2.4GHz hotspot.
2. Device Power-On: Power the fan light to mains supply. Ensure the fan and light work normally with stable power, no power failure or tripping.
3. App Preparation: Download and log in to the Smart App. Authorize the App device and location permissions to ensure normal device scanning and pairing.

Pairing steps

STEP 1 — Activate Pairing Mode
Make sure the fan light is powered on, then press and hold the “ALL OFF” button on the remote control for 15-20 seconds. When the light enters breathing mode, the fan light has entered pairing mode.

STEP 2 — Open the Add Device Page
Open the Smart or Smart Life app and sign in. Tap the “+” icon in the upper-right corner of the home page to add a device.

STEP 3 — Select the Device
The app will automatically scan for nearby devices. When the fan light appears, tap the device to continue.

STEP 4 — Connect to WiFi
Make sure your phone is connected to a 2.4 GHz WiFi network. Enter your WiFi password, then tap “Next” to begin the connection.

STEP 5 — Complete Pairing
Wait 10–30 seconds for the pairing process to finish. Do not close the app or lock your phone. When you see “Device Added Successfully,” tap “Done.”

STEP 6 — Control Your Fan Light
Once setup is complete, you can use the app to turn the light and fan on or off, adjust the fan speed and light color temperature, and set a timer or sleep mode.

TROUBLESHOOTING GUIDE

Problem	Solution
The fan does not work	□ Check the main and branch circuit fuses or breakers. □ Check to make sure the wall switch is in the on position if applicable. □ Check the line wire connections to the fan and switch wire connections in the switch housing. □ Check whether batteries are installed in the remote transmitter. □ Ensure the remote is within the effective operating range. □ Turn off the power supply before checking the dip-switch settings.
The fan is noisy	□ Ensure all motor housing screws are snug. □ Ensure the screws that attach the fan blade bracket to the motor hub are tight. □ Ensure the wire nut connections are not rattling against each other or the interior wall of the switch housing. □ Allow a 24-hour “breaking in” period. Most noises associated with a new fan disappear during this time. □ If you are using the ceiling fan light kit, ensure the screws securing the glassware are tight. Check that the light bulbs are also secure. □ Ensure the canopy is a short distance from the ceiling. It should not touch the ceiling. □ Ensure your outlet box is secure and rubber isolator pads were used between the mounting plate and outlet box.
Fan wobbles	□ Check that all blade and blade arm screws are secure. □ Most fan wobble problems are caused when blade levels are unequal. Check this level by selecting a point on the ceiling above the tip of one of the blades. Measure from a point on the center of each blade to the point on the ceiling. Rotate the fan until the next blade is positioned for measurement. Repeat for each blade. Any measurement deviation should be within 1/8 inch. Run the fan for ten minutes. If the fan continues to wobble please contact customer service and a balancing kit will be sent to you at no charge.
The remote control indicator light is on, but the fan does not work	□ Turn off power at the circuit breaker. □ Wait 10 seconds, then restore power. □ Immediately press and hold the "PAIRCODE FAN/OFF" button for 5 seconds to initiate pairing. □ Test the remote. After pairing, check that it can control and operate the fan and light properly. □ If it still does not work, contact your seller or the brand for a pre-paired remote and receiver.

AFTER-SALES SERVICE & WARRANTY

1.Warranty Coverage

This warranty covers factory manufacturing defects in the complete fan motor assembly, integrated LED light kit and driver, and original factory mounting accessories.

2.Void Warranty Conditions

This warranty becomes invalid if damage is caused by improper installation contrary to the manual instructions, unauthorized disassembly, modification or self-repair, man-made scratches or breakage, water immersion, lightning surges, abnormal household voltage, or use exceeding the product's rated parameters.

3. How to Claim Warranty

To make a warranty claim, please prepare your order ID, purchase screenshot, and clear photos or videos of the defect, then send all materials to our service email. Our engineering team will review the information and provide a solution within 24 business hours. Please have your order ID ready to help speed up the after-sales service process.

Contact Us for the Following Issues

Please contact our support team if you encounter any issues with missing mounting screws, brackets, or other installation hardware; difficulties or confusion during assembly or installation; LED light failures such as flickering, dim output, or no lighting; or fan motor malfunctions, including unusual noise, stuck blades, or failure to operate.

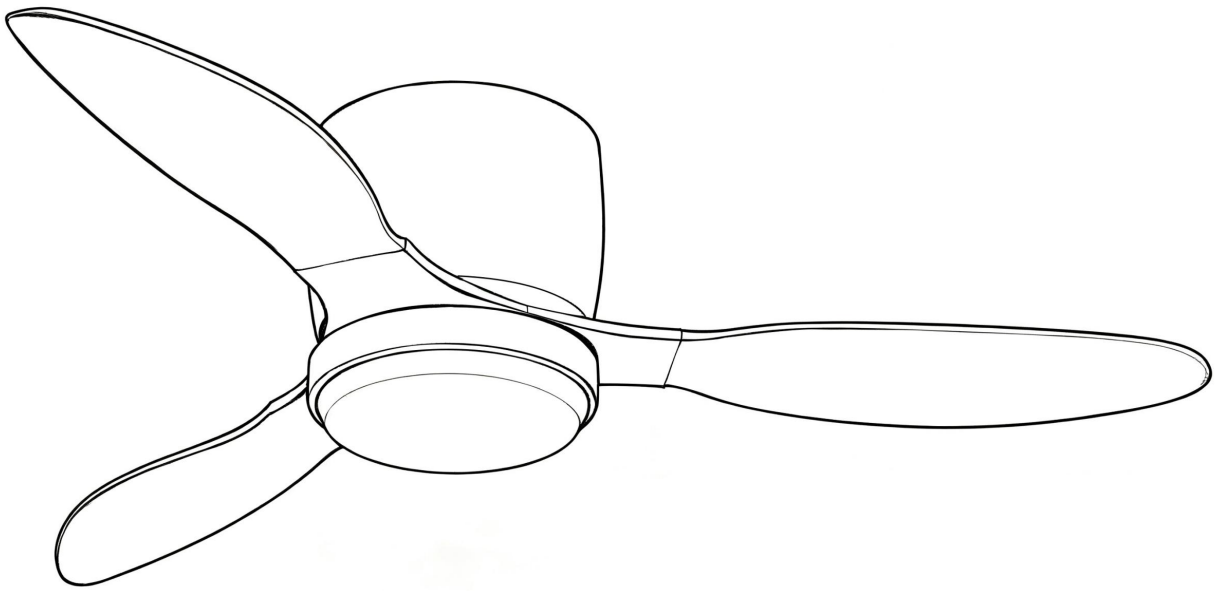

CEILING FAN

Installation Guide and Operating Instructions

Customer Support

Should you encounter any issues during installation or use, please feel free to reach out to our customer service.