CEILING FAN INSTRUCTION SHEET

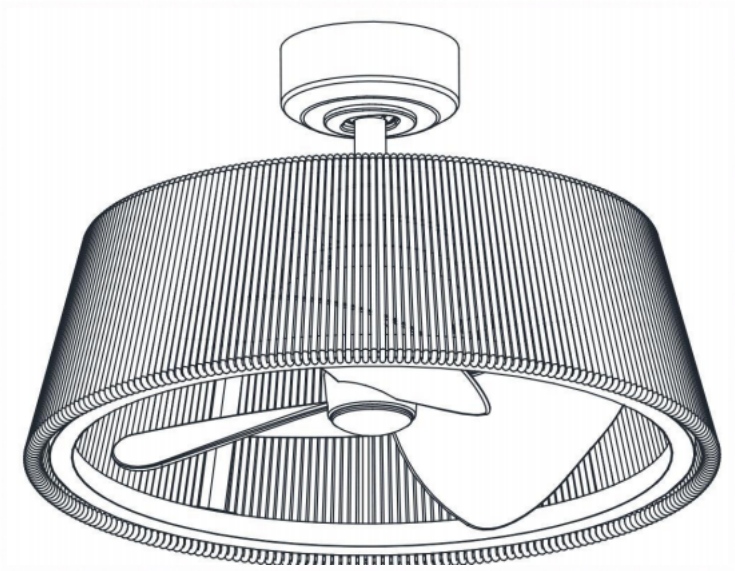

Category	Specification	Details
Appearance	Style	Semi-Flush Mount / Woven Rattan
	Body Material	Rattan
	Blade Material	PC
Lighting	LED Power	36W
	Dimming	Stepless (Remote)
	CCT	Stepless color tuning
Motor	Motor Type	2.4G Copper Motor
	Motor Power	15W
	Speeds	6
	Reversible	Yes
Control	APP Control	Yes
	Remote Control	Yes
	Timer	1H / 2H / 4H / 8H
Noise	Noise Level	Low-noise motor
Safety	Blade Material	PC (Safe, lightweight)
	Energy Saving	Yes

SAFETY INFORMATION

1. To reduce the risk of electric shock, ensure electricity has been turned off at the circuit breaker or fuse box before beginning.
2. The installation is to be in accordance with the National Electrical Code,ANSI/NFPA 70 and local codes . Electrical installation should be performed by a qualified licensed electrician.
3. **CAUTION:** Read all instructions and safety information before installing your new fan. Review accompanying assembly diagrams.
4. **WARNING: To reduce the risk of electrical shock and fire, do not use this fan with any solid-state fan speed control device.**
5. **WARNING: To reduce the risk of fire, electric shock, or personal injury, mount to UL Listed outlet box marked "acceptable for fan support of 15.9 kg (35 lbs) or less" and use mounting screws provided with the outlet box. Most outlet boxes commonly used for the support of light fixtures are not acceptable for fan support and may need to be replaced. Due to the complexity of the installation of this fan, a qualified licensed electrician is strongly recommended.**
6. **WARNING: To reduce the risk of fire, electric shock, or personal injury. Do not use replacement parts that have not been recommended by the manufacturer (e.g. parts made at home using A 3D printer)**
7. The fan must be mounted with a minimum of 2.3 m clearance from the trailing edge of the blades to the floor.The tip of the fan blade to the nearest wall obstruction: 30 inches.
8. **WARNING: Avoid placing objects in the path of the blades.**
9. To avoid personal injury or damage to the fan and other items, be cautious when working around or cleaning the fan.
10. Do not use water or detergents when cleaning the fan or fan blades. A dry dust cloth or lightly dampened cloth will be suitable for most cleaning.
11. After making electrical connections, spliced conductors should be turned upward and pushed carefully up into outlet box. The wires should be spread apart with the grounded conductor and the equipment grounding conductor on one side of the outlet box and the ungrounded conductor on the other side of the outlet box.
12. Electrical diagrams are for reference only. Light kits that are not packed with the fan must be UL and cUL Listed and marked suitable for use with the model fan you are installing. Switches must be UL and cUL General Use Switches. Refer to the Instructions packaged with the light kits and switches for proper assembly.
13. NOTE: Suitable for use in damp locations. Use only with light kits marked "Suitable for use in damp locations."
14. Do not wait for the fan to stop before pressing the reverse button. The fan will not reverse direction if the fan is not moving.
15. **WARNING: To reduce the risk of fire, electric shock, or personal injury. Do not use this fan with any solid-state speed control device.**
16. Check that the outlet box is securely installed in place such that it is able to support at least than fan weight 5.1KG.
17. The appliance is not intended for use by persons (including children) with reduced physical, sensory or mental capabilities, or lack of experience and knowledge, unless they have been given supervision or instruction concerning use of the appliance by a person responsible for their safety.
18. Children should be supervised to ensure that they do not play with the appliance.
19. All set screws must be checked, and re-tightened where necessary , before installation.
20. **WARNING: If unusual oscillating movement is observed, immediately stop using the ceiling fan and contact the manufacturer, its service agent or suitably qualified persons.**
21. The outlet box and support structure must be securely mounted and capable of reliably supporting a minimum of 15.9 kg (35 lbs). Use only UL listed outlet boxes marked "acceptable for fan support of 15.9 kg (35 lbs) or less."
22. That the mounting of the suspension system shall be performed by the manufacturer, its service agent or suitably qualified persons.
23. The fixing means for attachment to the ceiling shall be fixed with a sufficient strength to withstand 4 times the weight of the ceiling fan.

WARNING: TO REDUCE THE RISK OF FIRE, ELECTRIC SHOCK, OR PERSONAL INJURY. DO NOT USE THIS FAN WITH ANY SOLID-STATE SPEED CONTROL DEVICE.

WARNING: TO REDUCE THE RISK OF PERSONAL INJURY, DO NOT BEND THE BLADE ARMS (ALSO REFERRED TO AS FLANGES), WHEN INSTALLING THE BRACKETS, BALANCING THE BLADES OR CLEANING THE FAN.

READ AND SAVE THESE INSTRUCTIONS.

PACKAGE CONTENTS

- Safety
- Tools Needed
- Hardware Included
- Package Contents
- Fan Assembly
- Electrical Connections
- Fan Blade Installation
- Light Kit Installation
- Fan Operation
- Care and Cleaning
- Troubleshooting
- Warranty Information

TOOLS NEEDED

- Phillips screwdriver
- Flathead screwdriver
- Step ladder
- Wire cutter

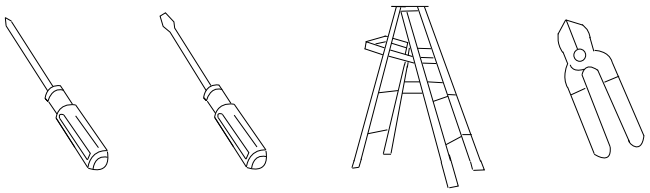

HARDWARE INCLUDED

- Bracket Mounting Hardware
  - wood screws **(1a)**
  - screws **(1b)**
  - wire nuts **(1c)**
  - lock washers **(1d)**
  - flat washers **(1e)**
- Fan Mounting Hardware
  - cotter pin **(2a)**
  - clevis pin **(2b)**

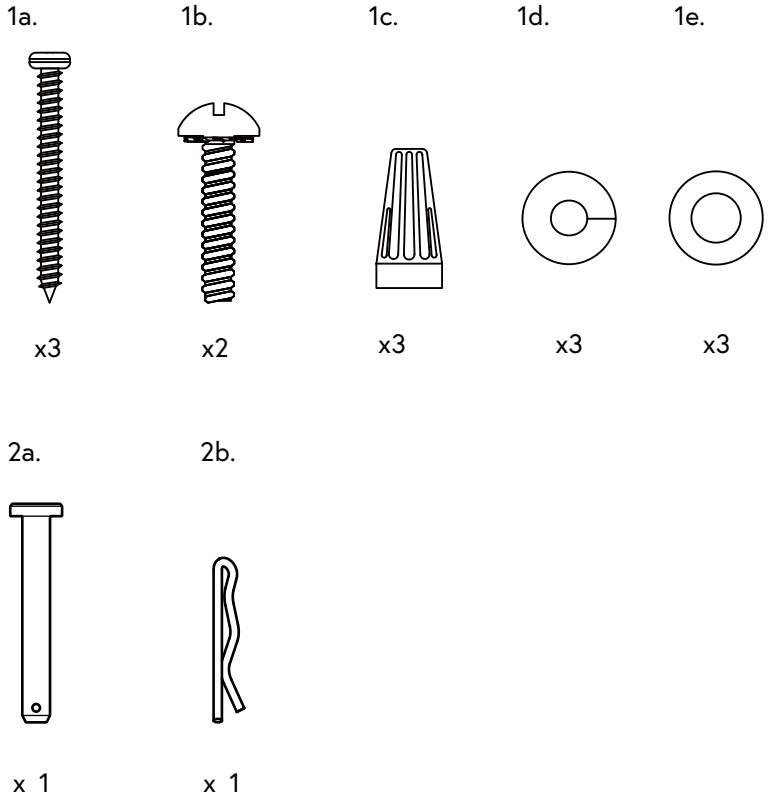

PACKAGE CONTENTS

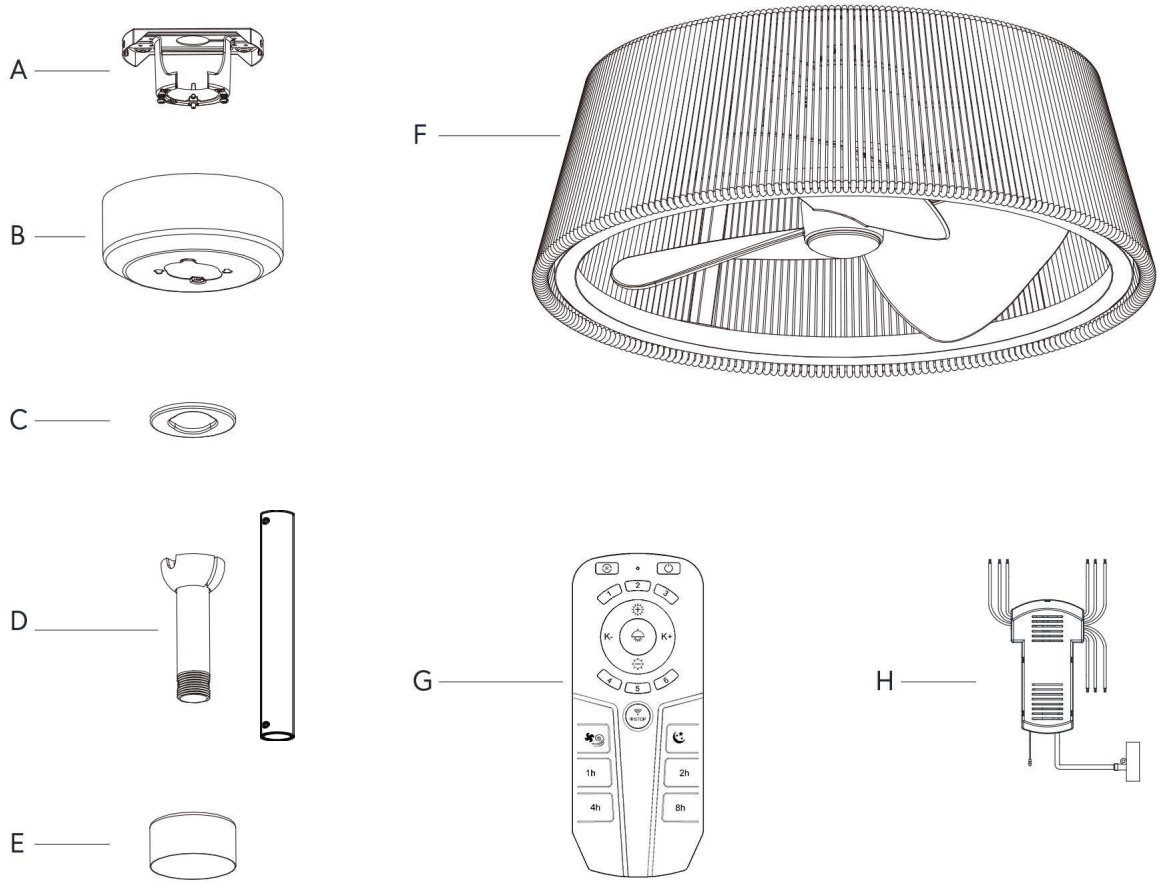

Part	Description	Quantity
A	Mounting bracket	1
B	Canopy	1
C	Canopy screw cover	1
D	Hanger ball/downrod assembly	2
E	Coupling cover	1
F	Fan motor assembly	1
G	Remote control	1
H	Receiver	1

PREPARING THE MOUNTING HARDWARE

Outlet Box Mounting Options

If there isn't an existing UL Listed octagonal mounting box marked "Acceptable for Fan Support" follow the instructions below. (**REMINDER**: an electrical junction box for use with luminaires is not acceptable for this application)

- Before you begin installing the mounting box, shut off the power at the circuit breaker of the fuse box.
- Secure the box directly to the building structure. The figures below show 3 example methods.

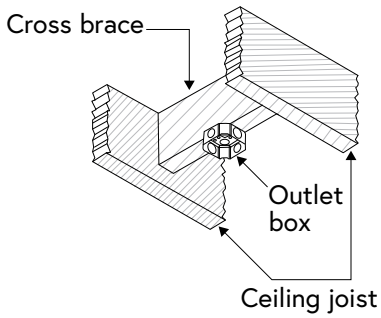

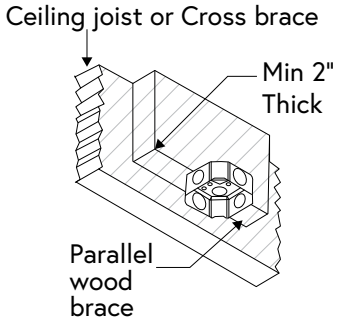

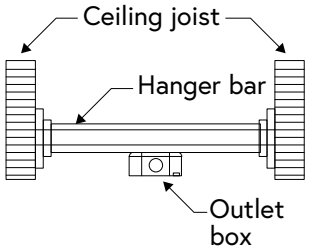

INSTALLING THE HANGING BRACKET

CAUTION: TO AVOID POSSIBLE ELECTRICAL SHOCK, BE SURE ELECTRICITY IS TURNED OFF AT THE MAIN POWER BOX BEFORE WIRING. ALL WIRING MUST BE IN ACCORDANCE WITH NATIONAL AND LOCAL ELECTRICAL CODES AND THE CEILING FAN MUST BE GROUNDED AS A PRECAUTION AGAINST POSSIBLE ELECTRIC SHOCK.

1. Loosen the two mounting screws in the outlet box. Pass the 120-Volt supply wires through the center hole in the slide-on mounting bracket .
2. Slide the slide-on mounting bracket on to the mounting screws and center the slide-on mounting bracket in relation to the outlet box. If necessary, use leveling washers (not included) between the slide-on mounting bracket and the outlet box. The flat side of the slide-on mounting bracket should face toward the outlet box, as shown.
3. Securely tighten the two mounting screws.

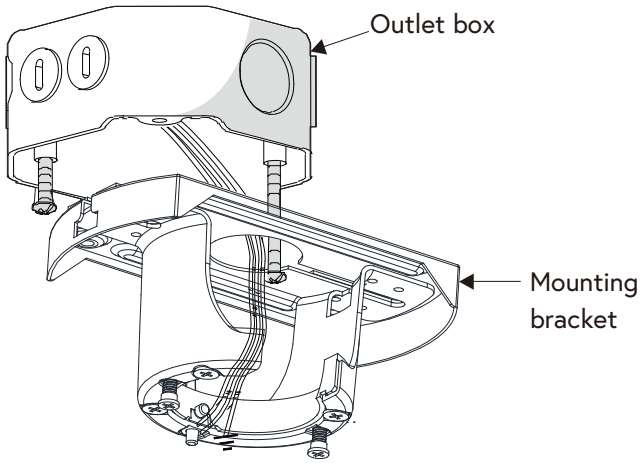

PREPARING THE MOTOR

1. Loosen the collar set screws from the motor collar.
2. Take out the set screw located in the hanger ball, lower the hanger ball and remove the cross pin. Remove the hanger ball from the hanger ball/downrod assembly.

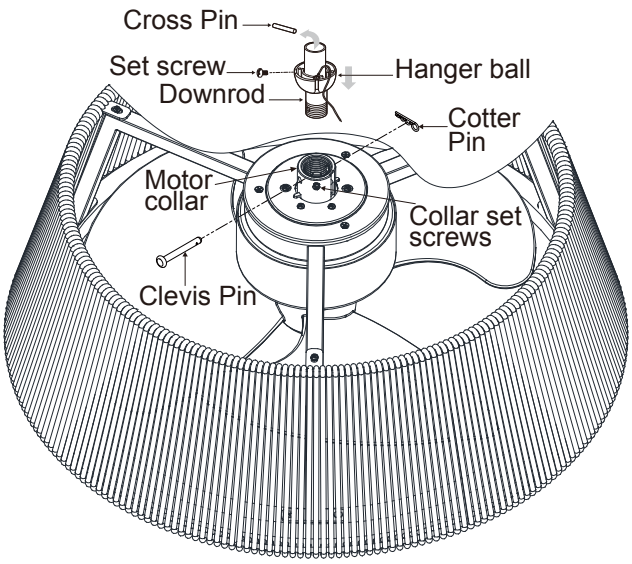

ASSEMBLING THE FAN

WARNING: Failure to properly install the cotter pin could result in the fan becoming loose and possibly falling.

1. Carefully feed the motor wires and safety cable up through the downrod. Thread the downrod into the collar until the holes at the bottom of the downrod align with the holes in the collar.
2. Carefully insert the clevis pin through the holes in the collar and downrod. Insert the cotter pin through the hole, near the end of clevis pin until it snaps into its locked position.
3. Slip the coupling cover, the canopy screw cover, and the canopy onto the downrod.
4. Carefully reinstall the hanger ball onto the downrod. Being sure that the cross pin is in the correct position, the set screw is tightened and wires are not twisted.

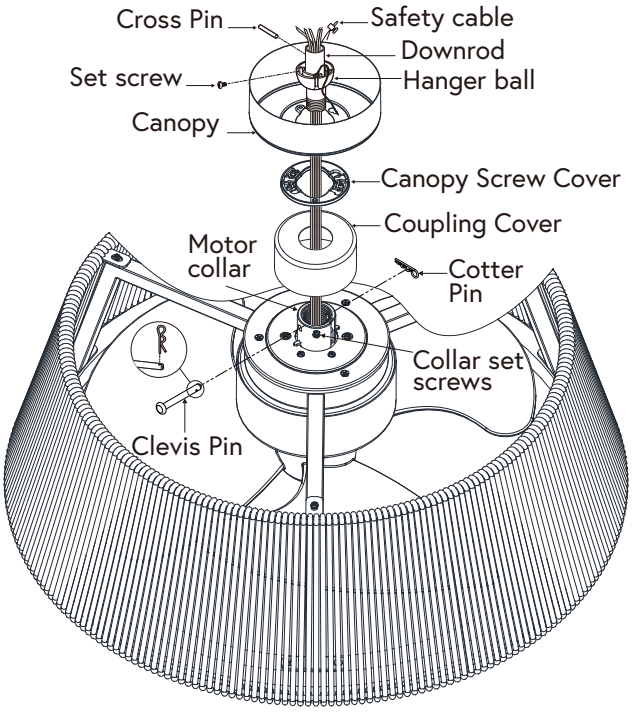

HANGING THE FAN

WARNING: The tab in the ring must rest in the groove of the hanger ball/downrod assembly. Failure to properly seat the tab in the groove could cause damage to the wiring.

1. Carefully lift the fan motor assembly up to the mounting bracket and seat the hanger ball/downrod assembly in the mounting bracket socket. Make sure the tab on the mounting bracket socket is properly seated in the groove in the hanger ball/downrod assembly. This will help to balance the ceiling fan.

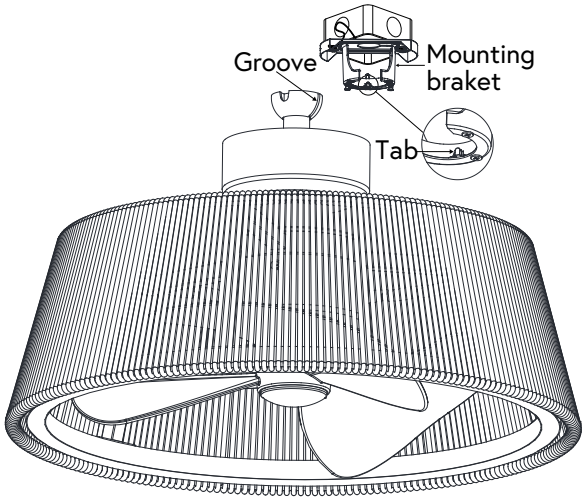

INSTALLATION OF THE SAFETY CABLE SUPPORT

NOTE: If installing the secondary support safety cable in the U.S., do not remove knockouts in the outlet box.

1. For Canadian installation and for USA fan and light kit combinations over 35 lbs, in both flush and downrod modes, the safety cable must be installed into the house structure beams using 3" lag screws, washers and lock washers provided. Make sure that when the safety cable is fully extended the lead wires are longer than the cable and no stress is placed on the lead wires.

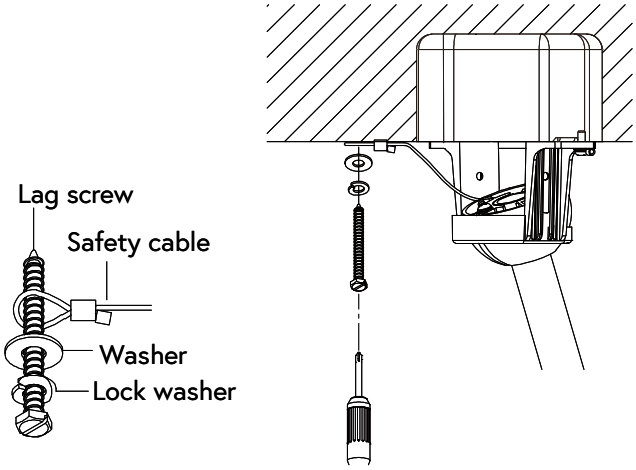

INSTALLING THE RECEIVER

1. Position the house supply wires to one side of the slide-on mounting bracket; position the fan wires to the opposite side.
2. Insert the receiver (as shown, flat side toward ceiling) into the slide-on mounting bracket until it rests on top of the ball/downrod assembly.
3. For best performance, make sure the black antenna and WiFi antenna (on the end of the receiver) remain extended and not tangled with any of the electrical wiring. Place the WiFi antenna on the outside of the canopy and stick/fix it on the ceiling.

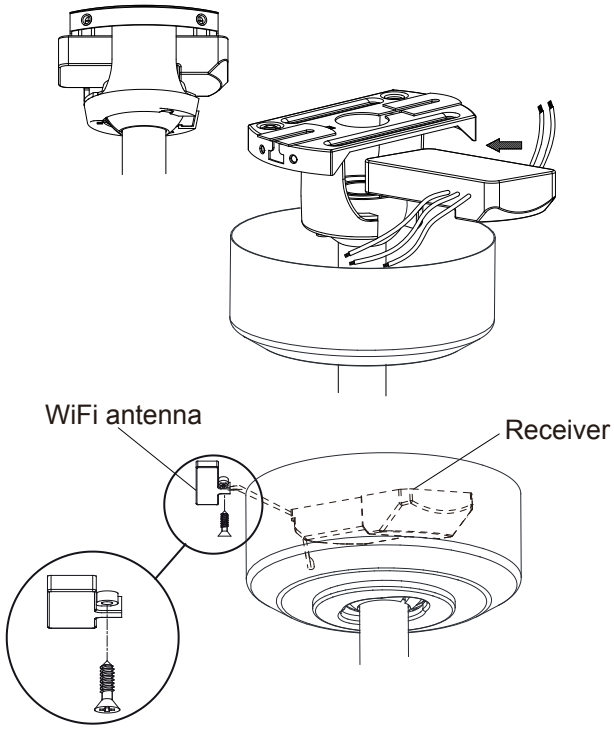

WIRING YOUR CEILING FAN

Note: If you lack electrical wiring experience, consult a licensed electrician for installation.

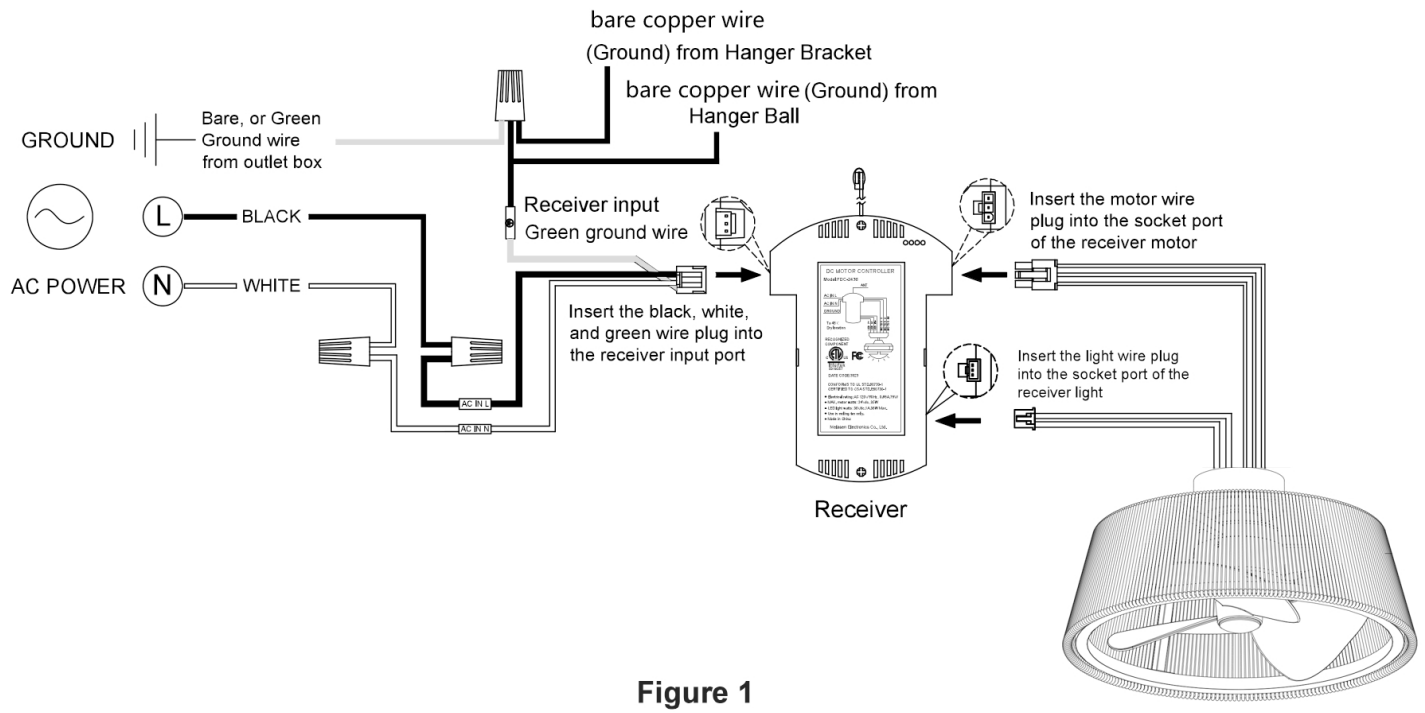

Figure 1

- ☐ **Connect the green ground wire from the receiver input, hanger bracket, and downrod to the bare (ground) wire from the ceiling, using a wire connector.**
- ☐ **Connect black wire from Receiver input unit marked "AC IN L" to black supply wire using wire connector.**
- ☐ **Connect white wire from Receiver input unit marked "AC IN N" to white supply wire using wire connector.**
- ☐ **Connect the motor plug wire to the receiver output corresponding motor female socket.**
- ☐ **Connect the light plug wire to the receiver output corresponding light female socket. (Figure 1)**

HARDWARE USED:

WIRE CONNECTORS x 3

NOTE:
If you feel that you do not have enough electrical wiring knowledge or experience, have your fan installed by a licensed electrician.

INSTALLING THE CANOPY

WARNING: When using the standard ball/downrod mounting, the tab in the ring at the bottom of the mounting bracket must rest in the groove of the hanger ball. Failure to properly seat the tab in the groove could cause damage to the wiring.

NOTE: The magnet is pre-attached on the canopy bottom cover for you to remove and install easily.

1. Align the locking slots of the canopy with the two screws and alignment post (in the slide-on mounting bracket).
2. Push up the canopy and turn it until the alignment post engages to the round hole and the screws engage to the key slots.
3. Firmly tighten the two mounting screws.
4. Align the oval shape on the canopy with canopy bottom cover.
5. Push up the canopy bottom cover until the screw heads engage to the slots on the canopy bottom cover so that the magnetic canopy bottom cover can be attached to the bottom of the canopy properly.

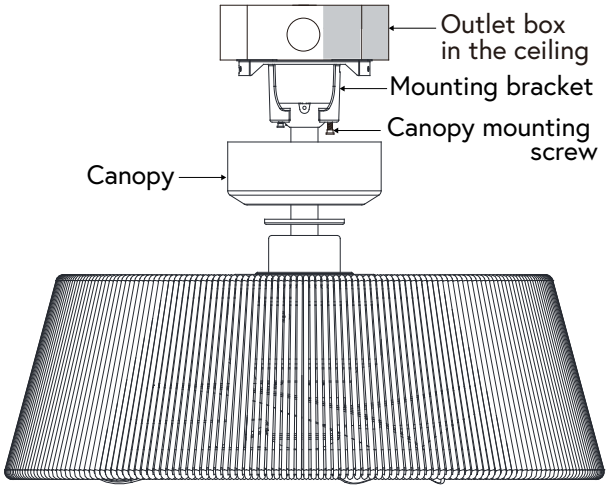

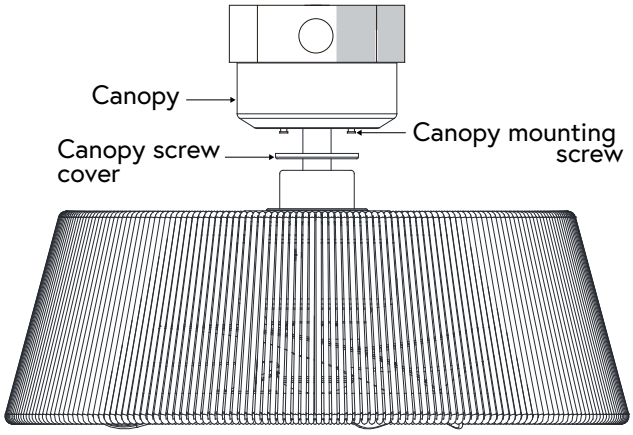

INSTALLING THE REMOTE CONTROL HOLDER

1. Remove the remote control holder cover from the remote control holder.
2. Attach the remote control holder with the two remote control holder mounting screw provided.
3. Replace the remote control holder cover into remote control holder.

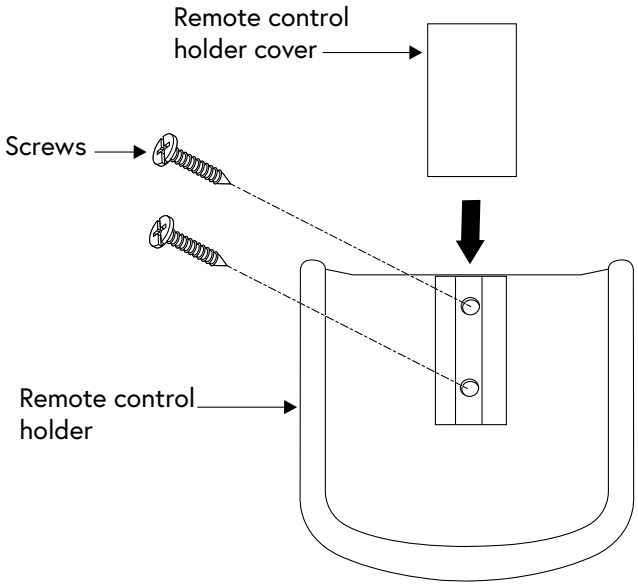

OPERATION

IMPORTANT: If you have two or more fans, please follow steps below to control each fan independently. Also follow steps below to re-pair the remote and the receiver when needed.

Install battery (included). To prevent damage to transmitter, remove the battery if not used for long periods of time.

1. **1-6 buttons:**
   These six buttons are used to set the fan speed as follows:
   1 = minimum speed
   6 = maximum speed

2. **button:**
   This button is used to turn off the fan and lights

3. **button:**
   This button sets fan direction forward or reverse.

4. **K- button:**
   This button reduces the color temperature

5. **K+ button:**
   This button enhances color temperature

6. **button:**
   This button enhances brightness

7. **button:**
   The brightness of this button decreases

8. **button:**
   This button controls the "on/off" status of the light.

9. **button:**
   Press and hold this button within 5 seconds of turning on the power to pair. In the case of successful pairing, pressing once controls the fan on/off status

10. **button:**
    This button turns on "breeze" option.

11. **button:**
    This button is for night light mode

12. **1h,2h,4h and 8h buttons:**
    These three buttons are used to set the fan timer as follows:
    1h = 2 hour timer
    2h = 2 hour timer
    4h = 4 hour timer
    8h = 8 hour timer

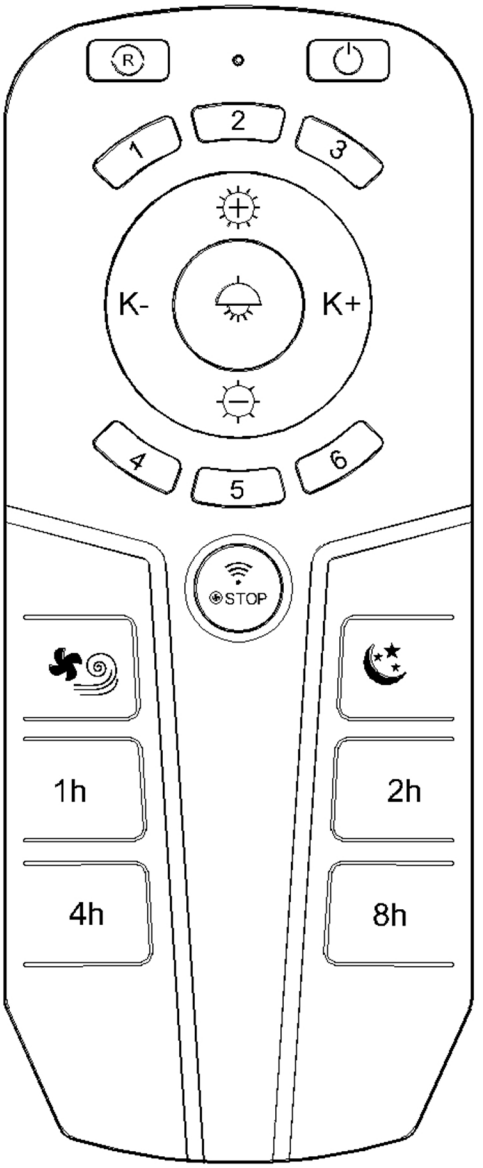

If pairing is successful, the fan's light kit will flash, the blades will begin to spin and the fan and light kit will turn off within 30 seconds.

NOTE: If the self calibration test failed, turn the AC power off; restore power and process the self calibration test again.

NOTE: The learning frequency function and self calibration test wil continue to retain the last set frequency and calibration set even when the AC power is shut off. If the frequency is changed the self calibration test will occur again

This receiver provides the following protective function:

1. Lock Rotor Position: The DC motor has a built-in safety against a stalled or locked rotor condition (stalled blade rotation). If there is an obstruction or fault with the motor, the current monitoring function will automatically turn power off to the motor after 30 seconds. Remove the obstruction and turn the AC power off. Restore power and re-start fan motor.
2. Over 80W protection: When the receiver detects motor power consumption which is greater than 80W, the receiver power will be stopped and operation will immediately discontinue. Wait for 5 seconds and then turn the receiver power back on.

Summer Mode and Winter Mode Operation

Speed settings for warm or cold weather depend on factors such as room size, ceiling height and number of fans.

Summer Mode (forward):

A DOWNWARD airflow creates a cooling effect. This allows you to set your air conditioner on a warmer setting without affecting your comfort.

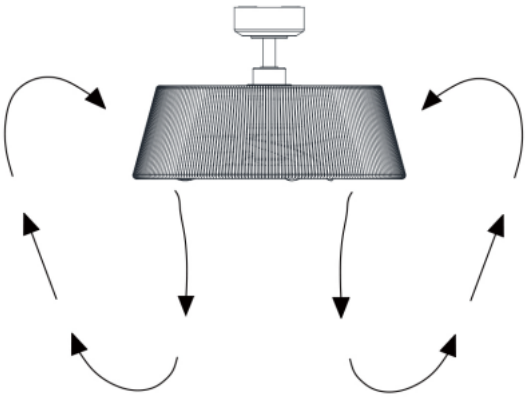

Winter Mode (reverse):

A UPWARD airflow moves warmer air off the ceiling area. This allows you to set your heating unit on a cooler setting without affecting your comfort.

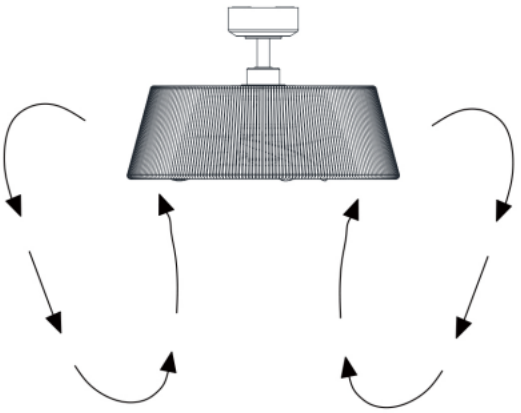

CARE AND CLEANING

- Make sure the power is off before cleaning .and it is recommended to clean the fan once a year.
- Periodically it may be necessary to re-tighten blade to blade arm screws or blade arm to motor screws to prevent clicking or humming sound during operation. This is especially true in climates with broad temperature and humidity ranges.
- When dusting the blades, you must support the blade to prevent bending - no pressure should be applied to the blades. If you experience any flaws in the operation of your fan, please check the following points.

TROUBLESHOOTING

PROBLEM	SOLUTION
FAN WILL NOT START	**1.** Check circuit fuses or breakers. **2.** Check wall control LED indicator light. If LED is not illuminated when pushing a button, it is not transmitting a signal. Please check battery, power to wall control/circuit breaker and all electrical connections. **3.** Assure there are no more than 2 fans operating on a circuit through the wall control. Assure that there are no more than 12 fans operating on a circuit through an on/off wall switch or a breaker (not through a wall control). **4.** Assure that the fan is within range of the wall control (30 ft.).
FAN SOUNDS NOISY	**1.** Allow a 24-hour "breaking-in" period. Most noise associated with a new fan will disappear during this time. **2.** Make sure all motor housing screws are securely fastened. **3.** Make sure the screws that attach the fan blade to the fan are tight. **4.** Make sure your ceiling box is secure and rubber isolator pads are used between the mounting bracket and outlet box.
FAN WOBBLES	**1.** Check that all blade to motor and blade arm screws are secure. **2.** If the blade wobble is still noticeable, interchanging two adjacent (side by side) blades can redistribute the weight and possibly result in smoother operation. **3.** Make sure the mounting plate is securely fastened to the ceiling outlet box. **4.** Make sure ceiling box is secure.