ASSEMBLY INSTRUCTION

NO.	Icon	Norm	Quantity
A		Φ8x50 screw	8
B		Φ8 Gaskets	14
C		Φ8 Gaskets	14
D		Φ8x20 screw	6
E		Hexagonal spoon	1

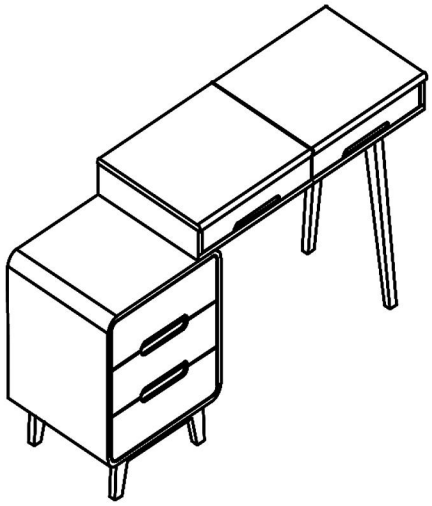

PRODUCT PARTS AND INSTALLATION DRAWINGS

1 Secondary cabinet x1

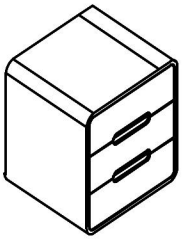

1 Secondary cabinet foot x1

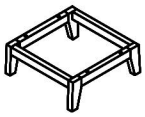

1 Main cabinet x1

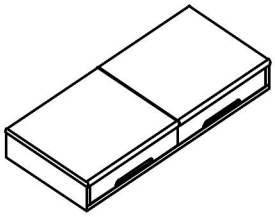

1 Main Cabinet Legs x1

STEP 1: ASSEMBLY OF SUB-CABINET FEET

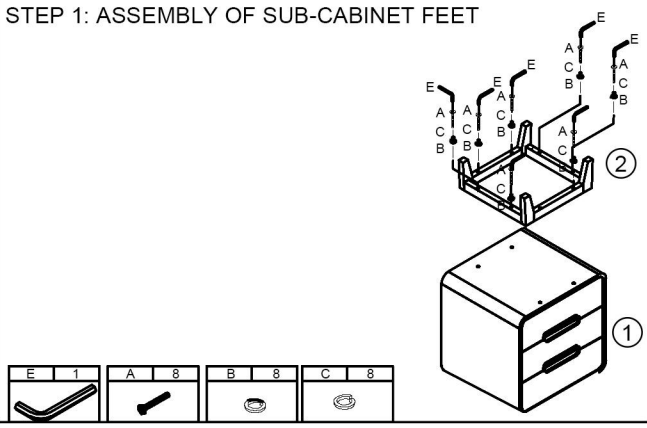

STEP 2: ASSEMBLY OF MAIN CABINET FEET

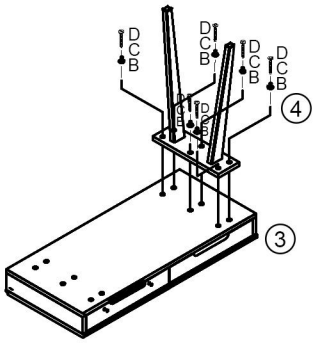
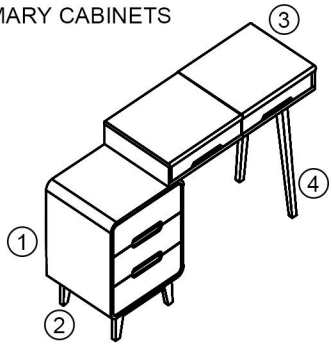
STEP 3: COMBINATION OF SECONDARY AND PRIMARY CABINETS