ASSEMBLY INSTRUCTIONS

TWIN LOW LOFT BED WITH SIDE

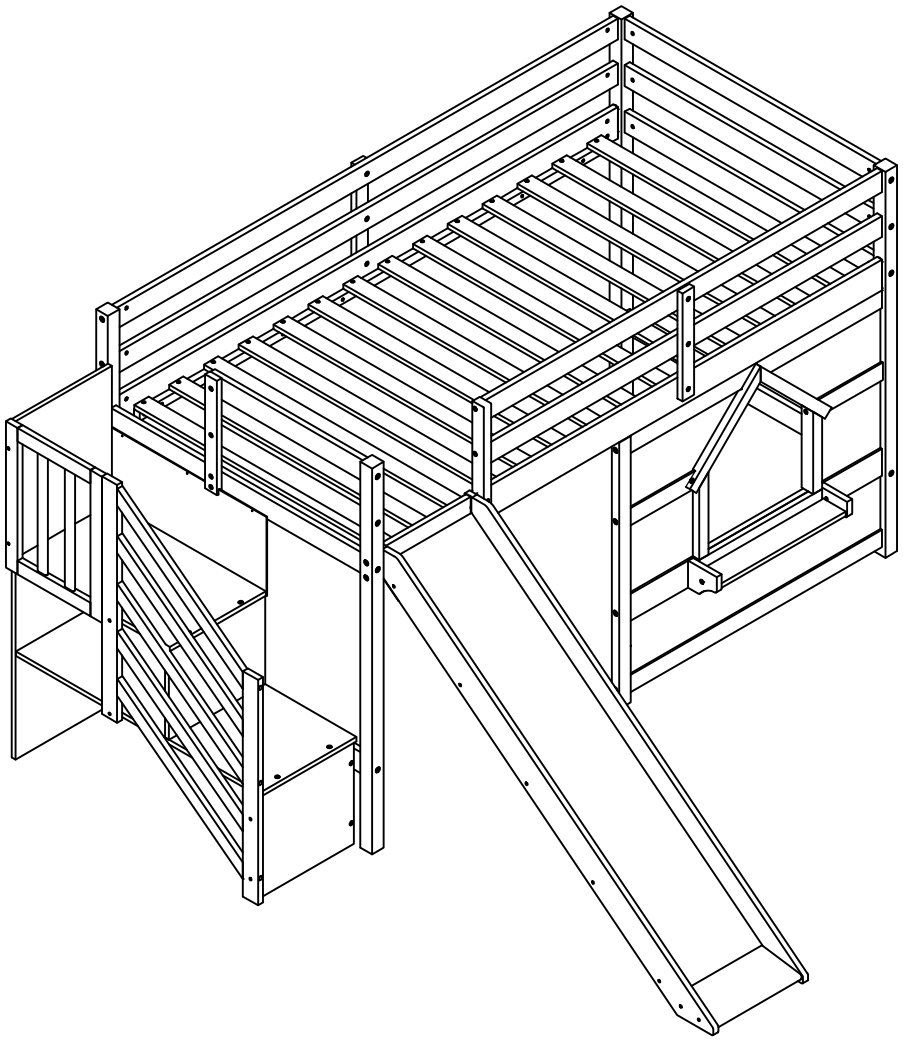

YX5554-T

SAFETY WARNING

1. This bed is designed for use only mattress (es) meeting the following specifications on the upper bunk:

   Upper bunk (Bunk bed and tribed included)

Bed type	Length	With	Thickness
Twin Standard	74"-75"	38 1/2"	6"

2. Replacement parts, including additional guardrails, maybe obtained from any of our (FANG XING CO.,LTD 18961 Arenth Avenue, City of industry, CA, 91748) dealers.
3. Follow the information on the warnings appearing on the upper bunk bed end structure and on the carton. Do not remove warning label from bed.
4. Always use the recommended size mattresses or mattress supports, or both, to help prevent the likelihood of entrapment or falls.
5. Surface of mattress must be at least 5" (127mm) below the upper edge of guardrails.
6. Do not allow children under 6 years of age to use the upper bunk.
7. Periodically check and ensure that the guardrail, ladder, and other components are in their proper position, free from damage, and that all connectors are tight.
8. Do not allow horseplay on or under the bed and prohibit jumping on the bed.
9. Always use the ladder for entering and leaving the upper bunk.
10. Do not use substitute part. Contact the manufacture or dealer for replacement part.
11. Use of a night light may provide added safety precaution for a child using the upper bunk.
12. Always use guardrails on both long sides of the upper bunk. If the bunk bed will be placed next to the wall, the guardrail that runs the full length of the bed should be placed against the wall to prevent entrapment between the bed and wall.
13. The use of water or sleep flotation mattresses is prohibited.
14. STRANGULATION HAZARD - Never attach or hang items to any part of the bunk bed that are not designed for use with the bed; for example, but not limited to, hook, belts and jump ropes.
15. Keep these instruction for future reference.
16. Prohibit more than one person on upper bunk
17. We recommend assembling your bunk bed on the shipping carton to protect your floor or carpet.
18. Be certain all staples are out of the box before beginning assembly on the shipping carton.

SAFETY WARNING

1. At the beginning :
   Tighten all hardware.
   Check metal parts for rust. If found, sand and repaint using a non-lead-based paint meeting the requirements of 16 CFR 1303.
   Chesk all wood members for deterioration and splinters. Sand down splinters and replace deteriorating wood members.
   Rake and check depth of loose fill protective surfacing materials to prevent compaction and to maintain appropriate depth. Replace as necessary.
2. Twice a month :
   Tighten all hardware.
   Rake and check depth of loose fill protective surfacing materials to prevent compaction and to maintain appropriate depth. Replace as necessary.
3. Owners shall be responsible for maintaining the legibility of the warning lablels.
4. Disposal Instructions
   There shall be instructions advising the owner to disassemble and dispose of the playground equipment in such a way that no unreasonable hazards will exist at the time the playground equipment is discarded.
5. The instruction shall also include the information found in Section 4 of the United States Consumer Product Safety Commission's (USCPSC) Outdoor Home Playground Safety Handbook or specific surfacing guidelines for the product consistent with the USCPSC Handbook. A copy of this section may be found in Appendix X2.
6. Observing the following statements and warnings reduces the like lihood of serious or fatal injury.
7. Specifying the number and weight of occupants that may safely use the equipment singly or simultaneously.
8. Recommending on-site adult supervision for children of all ages.
9. Warning the owner to instruct children not to use the equipment in a manner other than intended.
10. Warning the owner to instruct children not to get off equipment while it is in motion.
11. Warning the owner to allow children to wear inappropiate items, such as but not limited to, loose fitting clothing, hood and neck drawstrings, scarves, cord-connected items, capes and ponchos. These items can cause death by strangulation.
12. Warning the owner to instruct children not to climb when the equipment is wet.
13. Warning the owner to instruct children not to attach items to the playground equipment that are not specifically designed for use with the equipment, such as, but not limited to, jump ropes, clothesline, pet leashes, cables and chain as they may cause a strangulation hazard.
14. Warning the owner to instruct children to remove their bike or other sports helmet before playing on the playground equipment.
15. Warning the owner to dress children with well-fitting and full foot enclosing footwear. Examples of inapproprite footwear are clogs, flip flops, and sandals.
16. Place the equipment on level ground, not less than 6 ft (1.8 m) from any structure or obstruction such as a fence, garage, house, overhanging branches, laundry lines, or electrical wires.
17. Do not install home playground equipment over concrete, asphalt, packed earth, grass, carpet, or any other hard surface. A fall onto a hard surface can result in serious injury or death to the equipment user
18. Toprevent serious injury, cautionary statements shall be included which warn that children must not use the equipment until properly installed.

Detail View

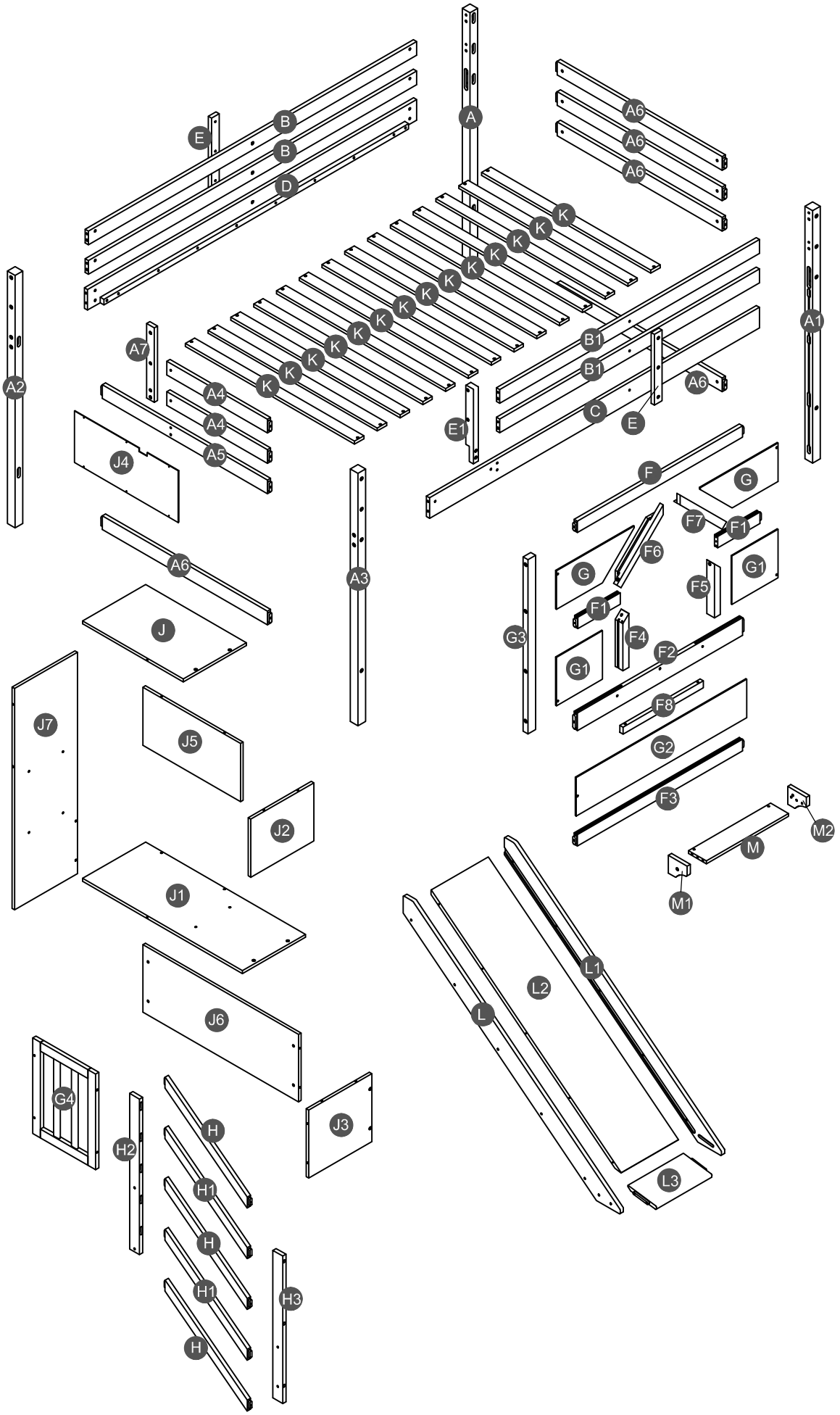
A
A1
A2
A3
A4
A5
A6
A7
B
B1
C
D
E
E1
F
F1
F2
F3
F4
F5
F6
F7
F8
G
G1
G2
G3
G4
H
H1
H2
H3
J
J1
J2
J3
J4
J5
J6
J7
K
L
L1
L2
L3
M
M1
M2

Part List

YX5554 (1-2)

A4 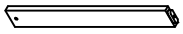 Upper horizontal bar FB - 2pcs	**A5** 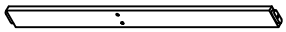 Lower horizontal bar FB - 1pc	**A6** 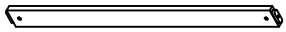 Horizontal bar HB/FB - 5pcs
A7 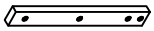 Vertical guard rail FB - 1pc	**B**  Long guard rail (back) - 2pcs	**B1** 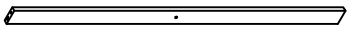 Short guard rail (front) - 2pcs
C 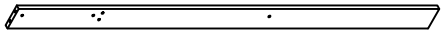 Side rail (front) - 1pc	**D**  Side rail (back) - 1pc	**E** 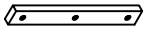 Vertical guard rail - 2pcs
F 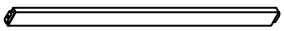 Upper horizontal bar (front) - 1pc	**F1**  Horizontal bar (front) - 2pcs	**F2** 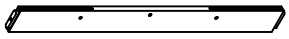 Mid horizontal bar (front) - 1pc
F3  Lower horizontal bar (front) - 1pc	**G** 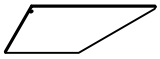 Side panel (front) - 2pcs	**G1**  Side panel (front) - 2pcs
J2 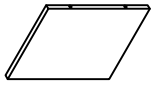 Upper front panel - 1pc	**J4** 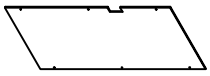 Support panel - 1pc	**J5**  Upper right side panel - 1pc
K 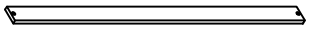 Slats - 14pcs	**L** 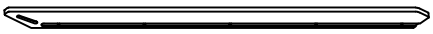 Left side slide - 1pc	**L1** 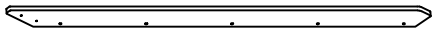 Right side slide - 1pc
L2 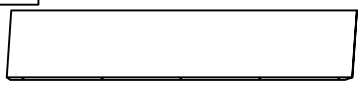 Slide panel - 1pc	**L3**  Slide panel - 1pc	**M** 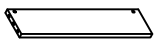 Sheft panel - 1pc
M1  Support block (left) - 1pc	**M2**  Support block (right) - 1pc	

Part List

YX5554 (2-2) + Hardware in side

A 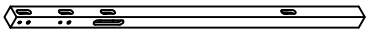 Leg (right back)-1pc	**A1**  Leg (right front)-1pc	**A2** 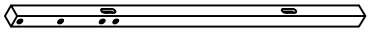 Leg (left back)-1pc
A3 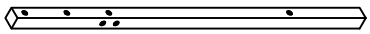 Leg (left front)-1pc	**E1** 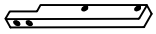 Vertical guard rail - 1pc	**F4**  Vertical bar (left front) - 1pc
F5  Vertical bar (right front) - 1pc	**F6**  Horizontal bar (left front) - 1pc	**F7** Horizontal bar (right front) - 1pc
F8 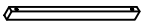 Support bar (front) - 1pc	**G2** 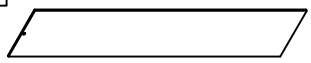 Lower side panel (front) - 1pc	**G3** 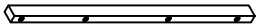 Vertical bar (front) - 1pc
G4 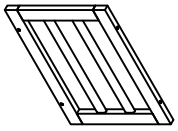 Guard rail - 1pc	**H** 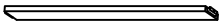 Guard rail bar - 3pcs	**H1** 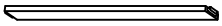 Guard rail bar - 2pcs
H2 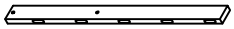 Vertical bar (back) - 1pc	**H3** 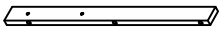 Vertical bar (front) - 1pc	**J**  Upper step ladder panel - 1pc
J1 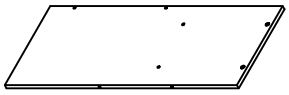 Lower step ladder panel - 1pc	**J3** 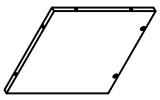 Lower front panel - 1pc	**J6** 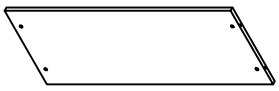 Lower right side panel - 1pc
J7 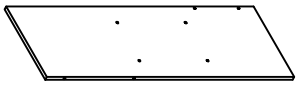 Back panel - 1pc		

Hardware List YX5554 (2-2)

1 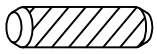 Ø10*40mm	**2** 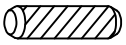 Ø8*30mm	**3** 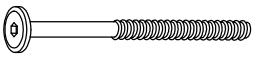 (Ø15)1/4"*100mm
Wood dowel (8pcs)	Wood dowel (10pcs)	Hex-Head bolts (14pcs)
4 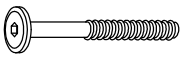 (Ø15)1/4"*80mm	**5**  (Ø12)1/4"*60mm	**6**  (Ø12)1/4"*40mm
Hex-Head bolts (24pcs)	Hex-Head bolts (26pcs)	Hex-Head bolts (2pcs)
7  (Ø12)1/4"*35mm	**8** 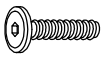 (Ø12)1/4"*30mm	**9**  1/4"*15 (9.5mm)
Hex-Head bolts (2pcs)	Hex-Head bolts (10pcs)	Horizontal-Hole bolts(62pcs)
10  (Ø12)1/4"*65mm	**11**  (Ø12)1/4"*50mm	**12**  (Ø12)1/4"*40mm
Hex-Head screws (8pcs)	Hex-Head screws (18pcs)	Hex-Head screws (2pcs)
13  (Ø12)1/4"*30mm	**14**  Ø4*30mm	**15**  Ø3.5*15mm
Hex-Head screws (1pc)	Wood screws (32pcs)	Wood screws (20pcs)
16  Ø3*12mm	**17** 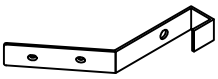 142*18*2mm	**18** 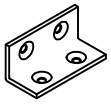 40*17*17*1.6mm
Wood screws (7pcs)	Hooks (2pcs)	Metal bracket (5pcs)
19 L1900mm	**20**  2000mm	**21**  22*10*6mm
Led light (1pc)	Adapter and wire strip (1pc)	Clamp plastic (1pc)
22  Ø13"*3mm	**23**  (1/4")4.5*58mm	
Spring Washer (14pcs)	Allen key (1pc)	

OPTIONAL TOOLS FOR ASSEMBLY (NOT INCLUDED)

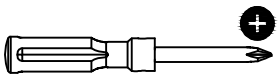

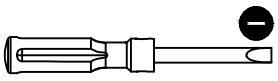

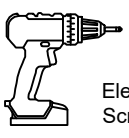

Electric Screwdriver

PLEASE BE CAREFUL DO NOT DAMAGE THE HOLE POSITION WHEN YOU USE POWER TOOLS !

STEP 1:

4	9
4PCS	4PCS

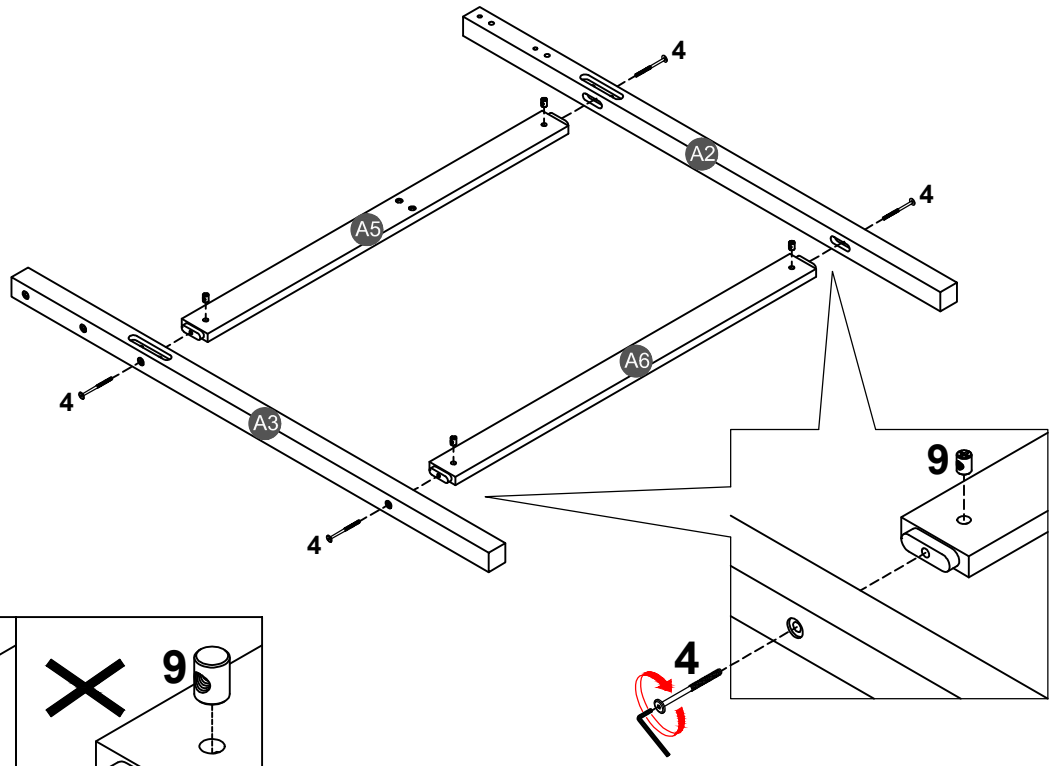

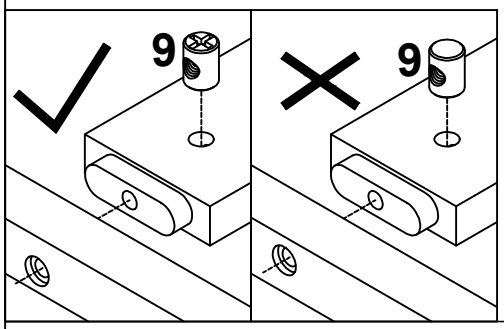

Note:Part 9 will face up with the "x" mark on it, otherwise it cannot be tightened

STEP 2:

4	9
8PCS	8PCS

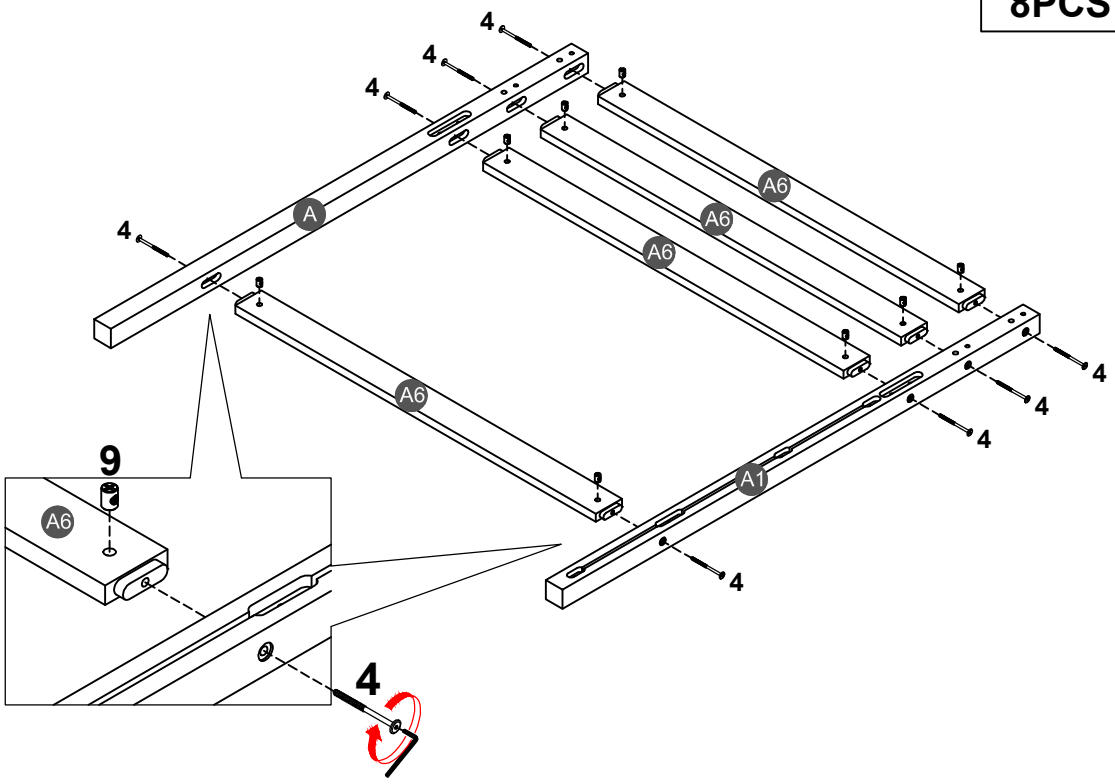

STEP 3:

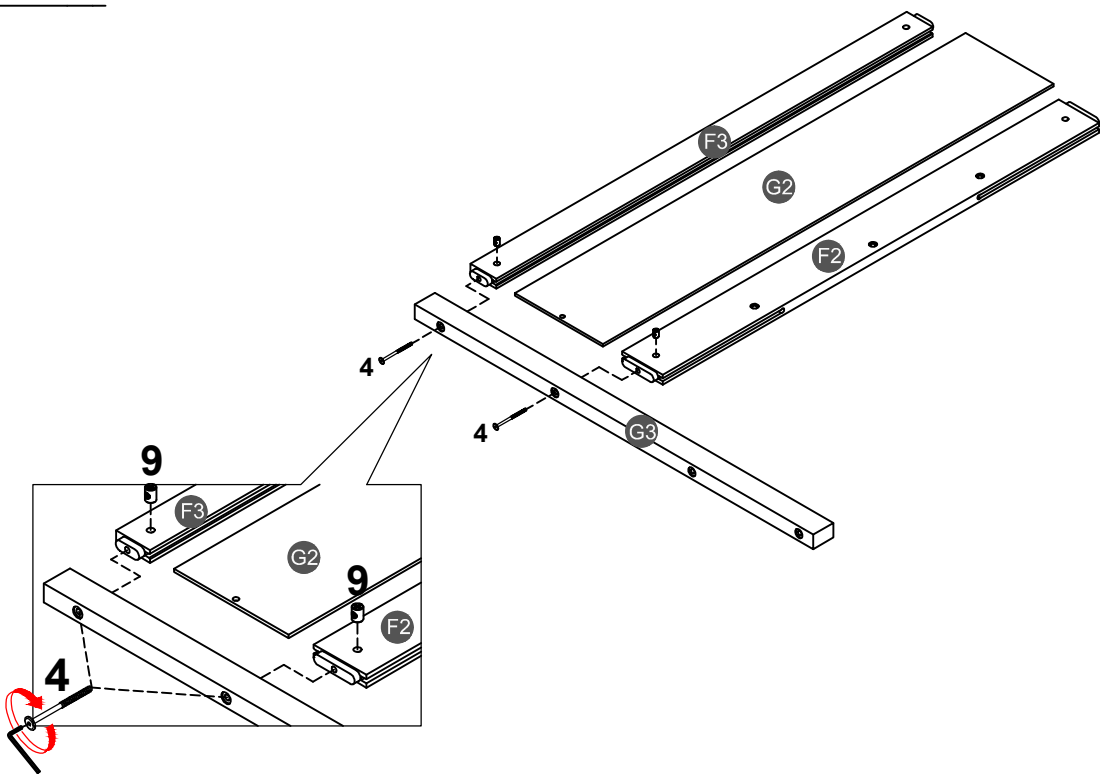

4 — 2PCS

9 — 2PCS

STEP 4:

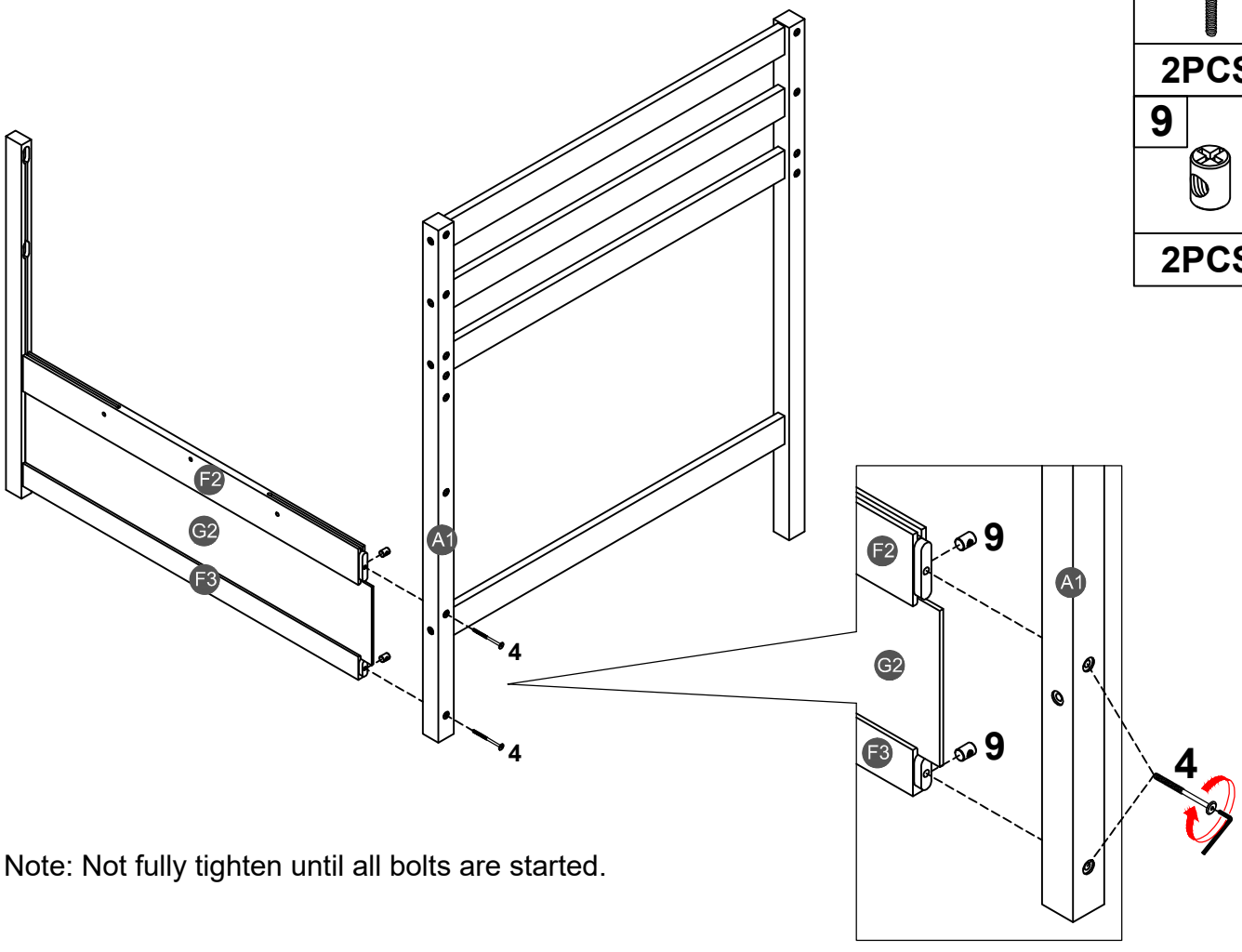

4 — 2PCS

9 — 2PCS

Note: Not fully tighten until all bolts are started.

STEP 5:

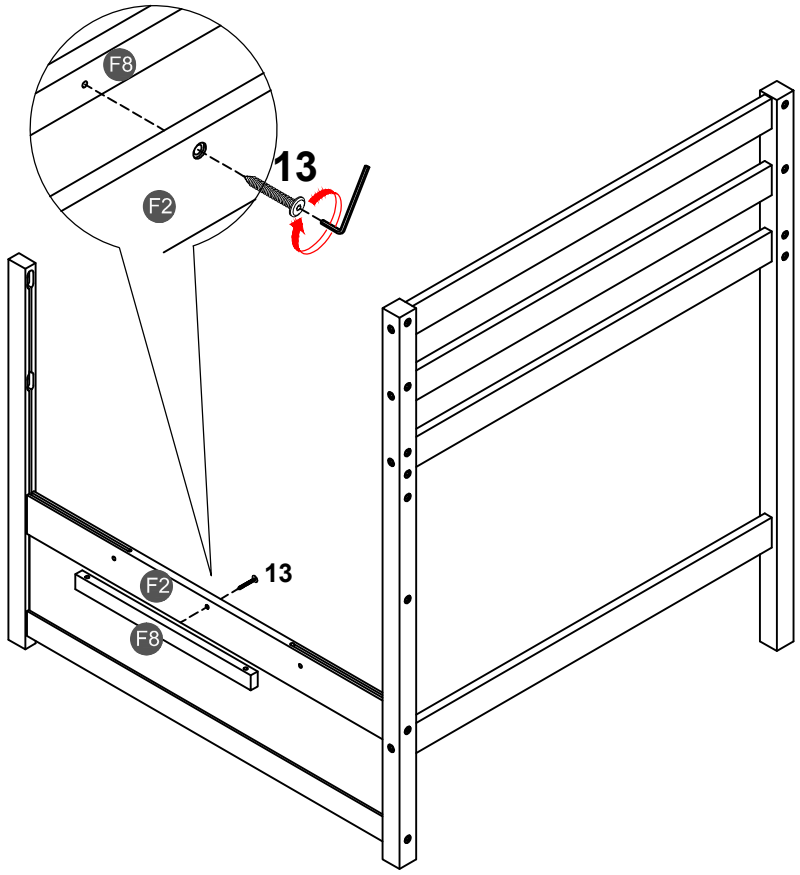

13



1PC

STEP 6:

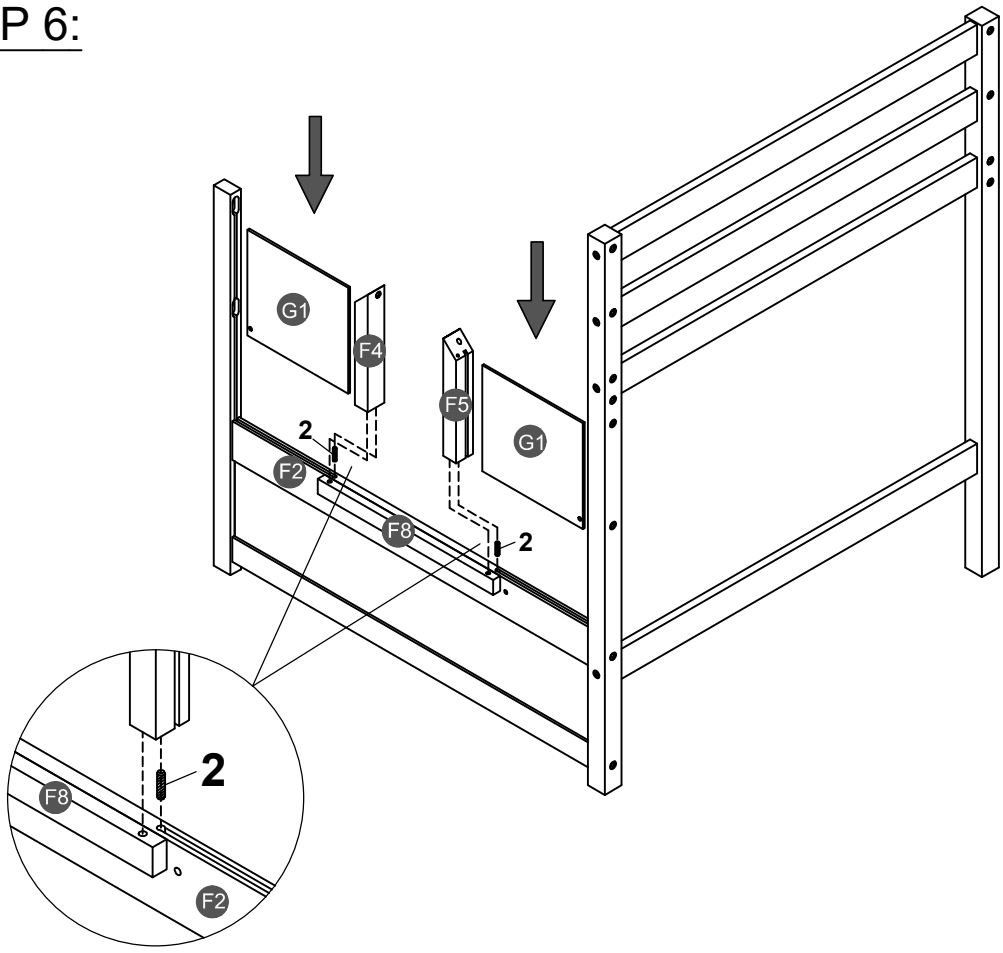

2



2PCS

STEP 7:

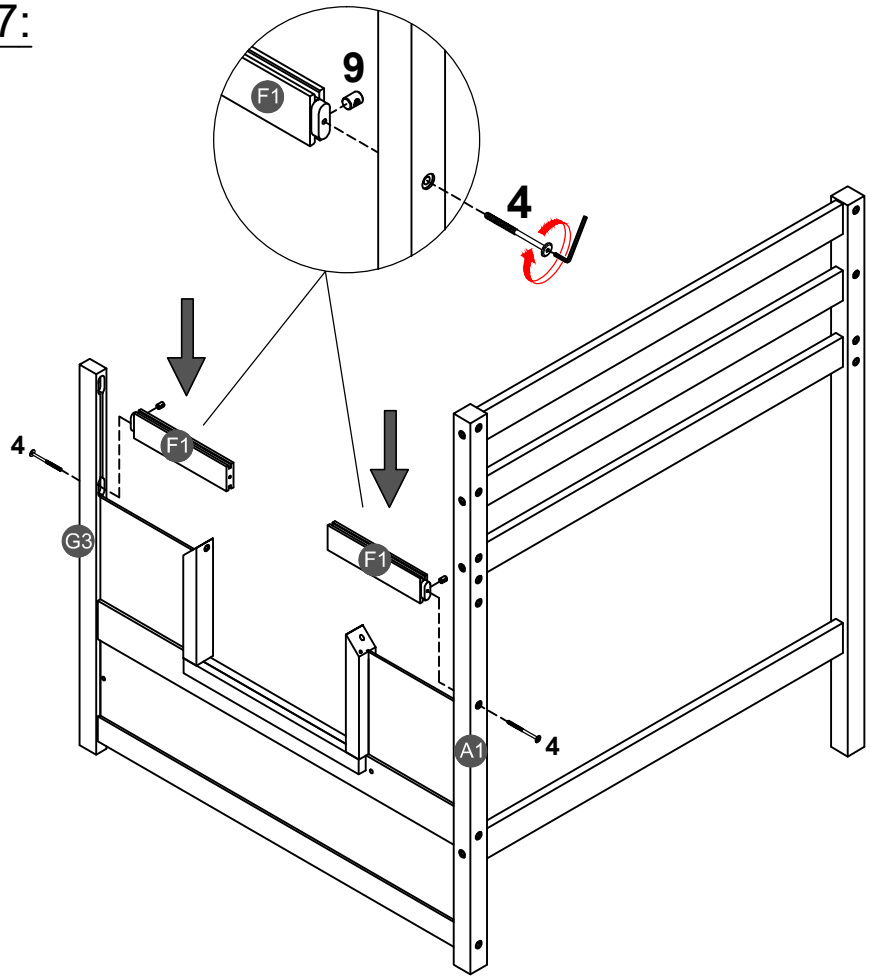
9
F1
4
4
F1
G3
F1
A1
4

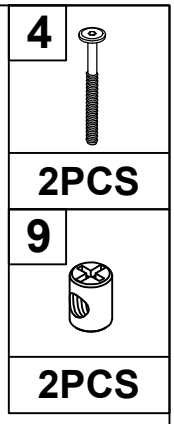
4
2PCS
9
2PCS

STEP 8:

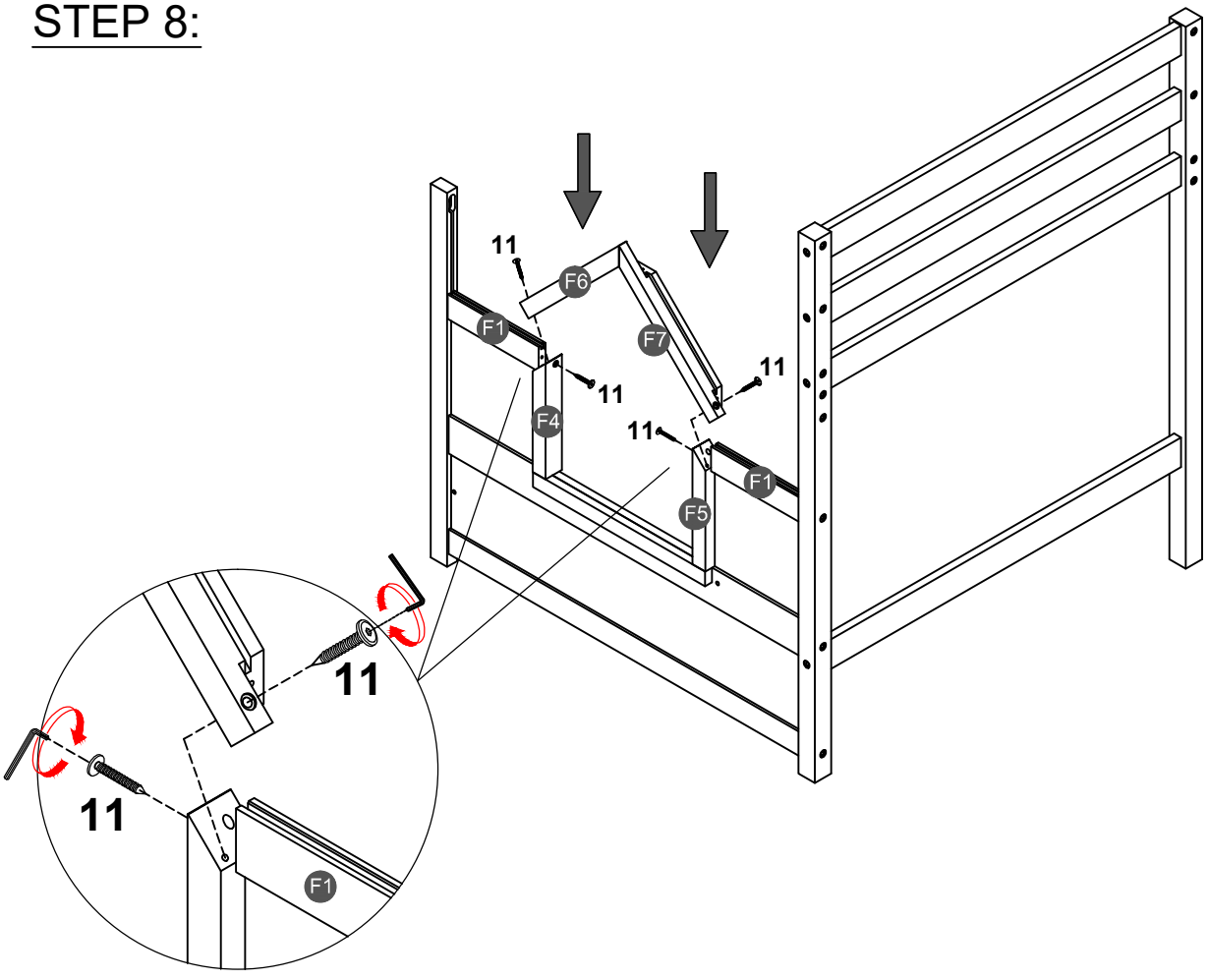
11
F6
F1
F7
11
11
F4
11
F1
F5
11
11
F1

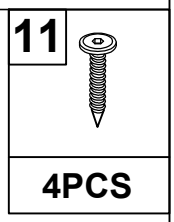
11
4PCS

STEP 9:

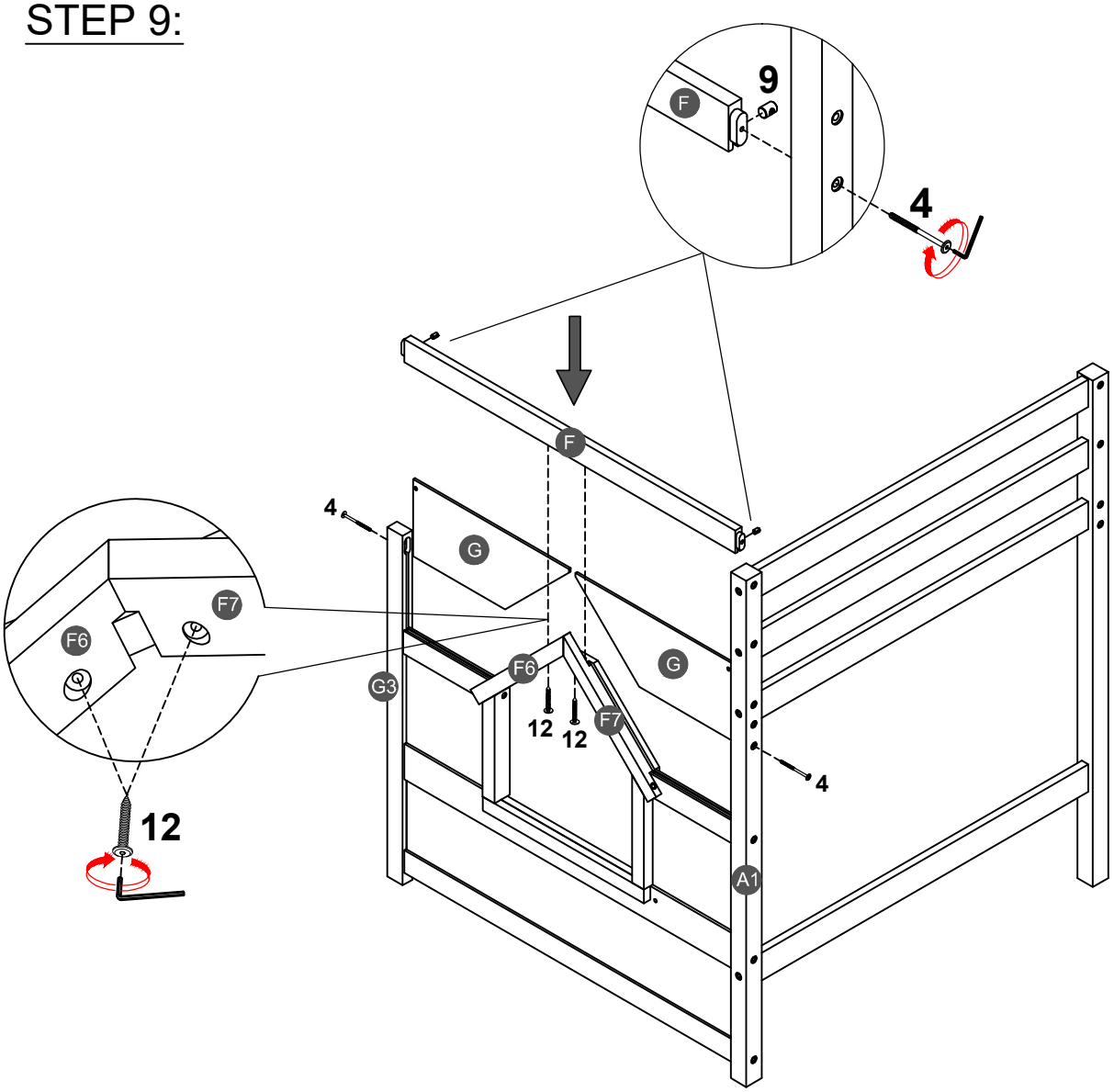

4

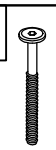

2PCS

9



2PCS

12



2PCS

STEP 10:

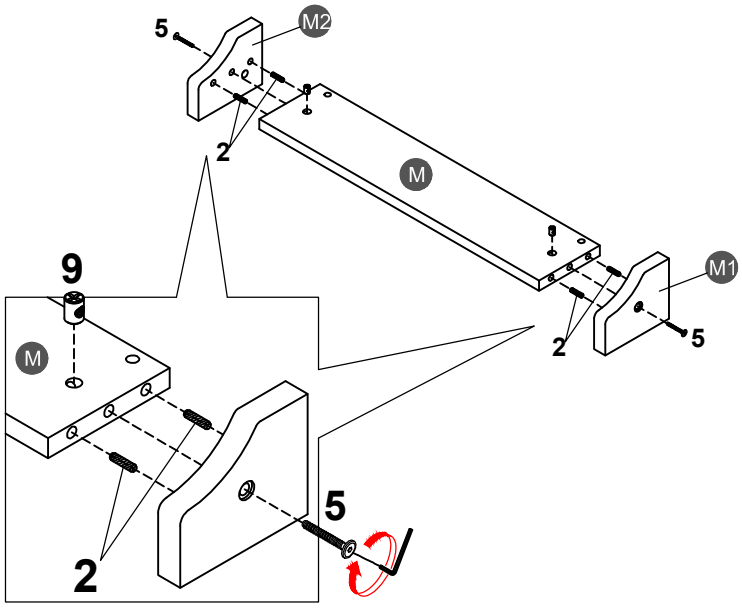

2



4PCS

5



2PCS

9



2PCS

STEP 11:

5	9	10
2PCS	2PCS	2PCS

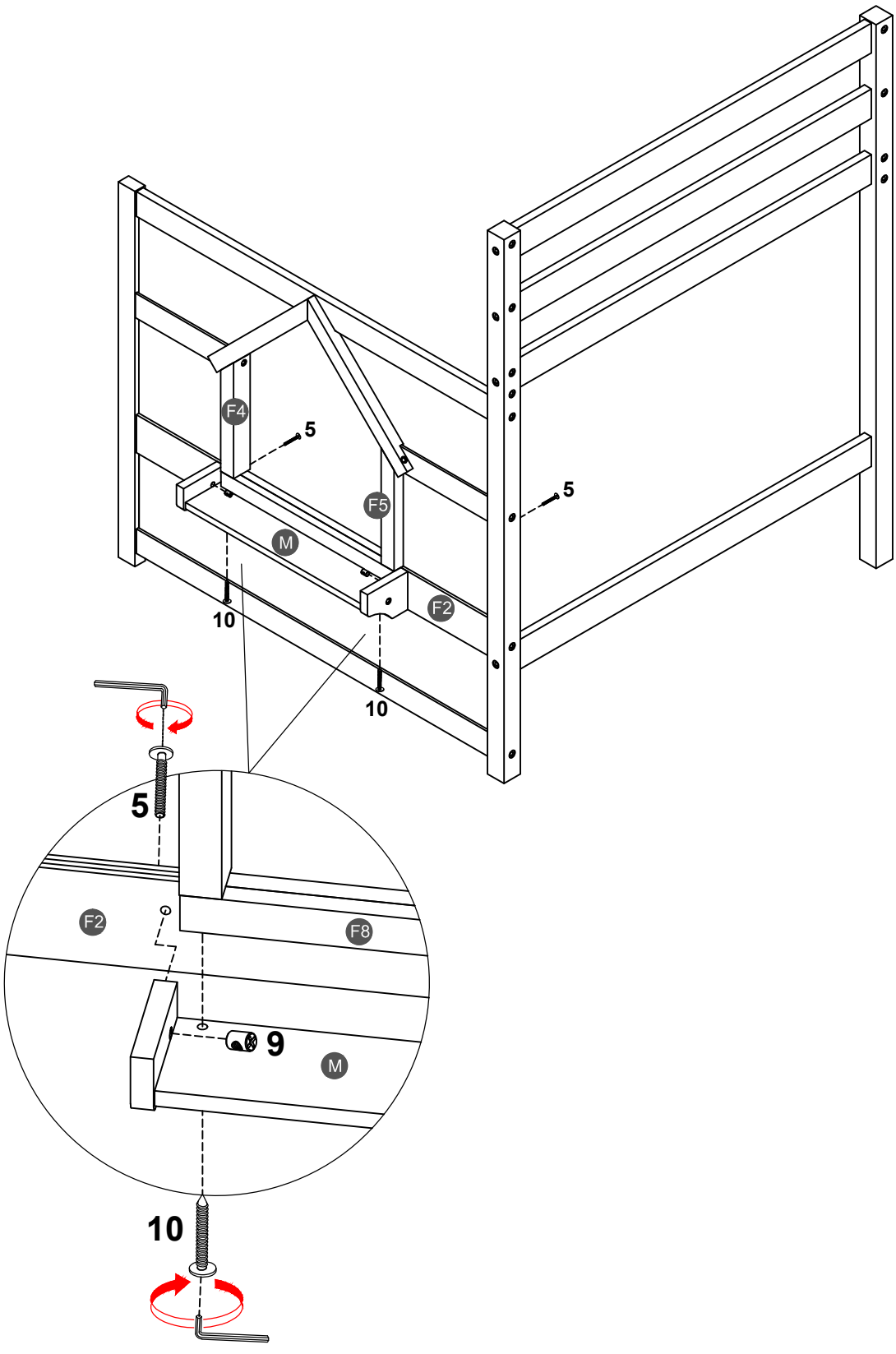

STEP 12:

1	3	9
4PCS	12PCS	12PCS

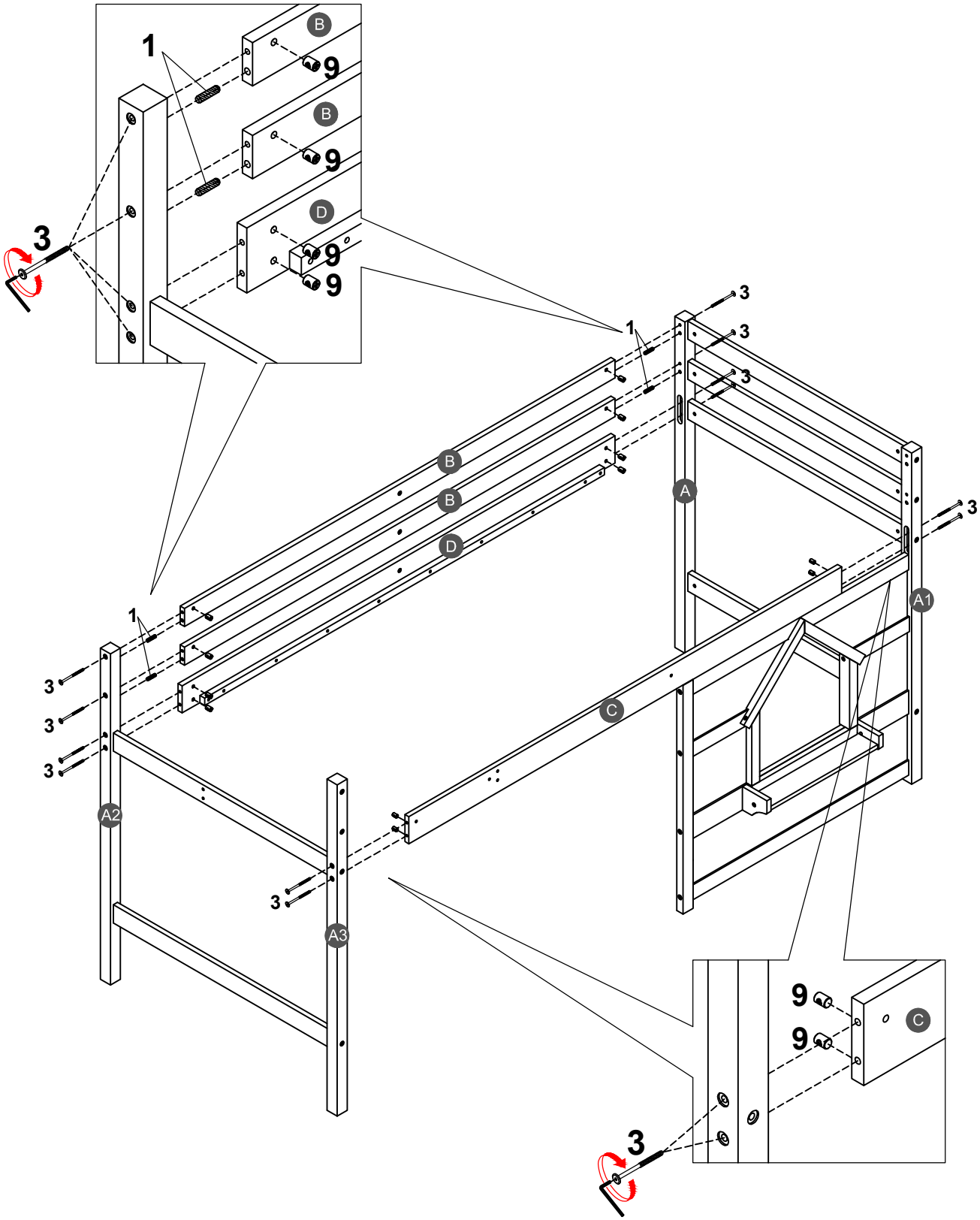

STEP 13:

1	3	4	7	9
4PCS	2PCS	2PCS	2PCS	4PCS

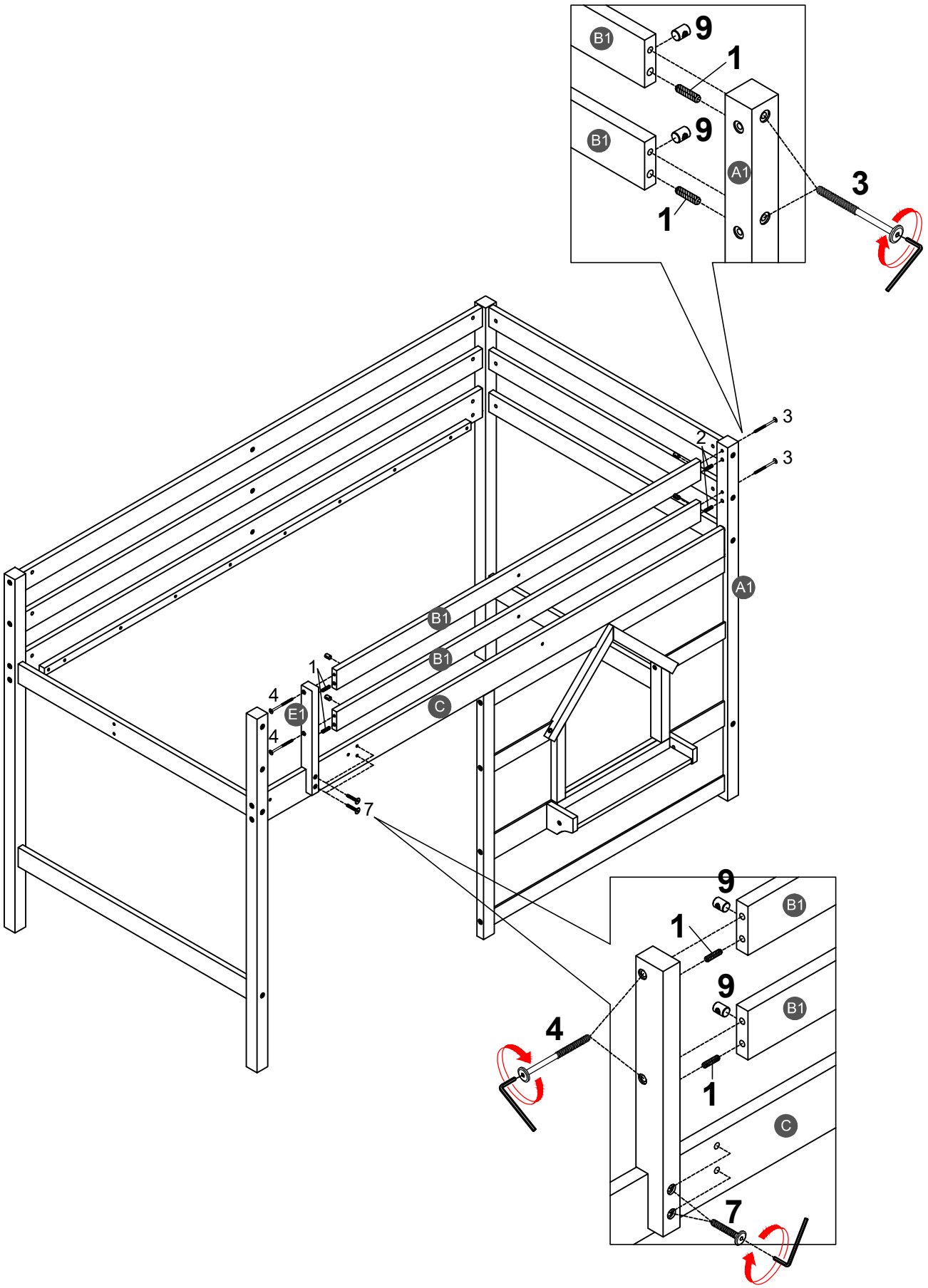

STEP 14:

4	8	9
2PCS	4PCS	2PCS

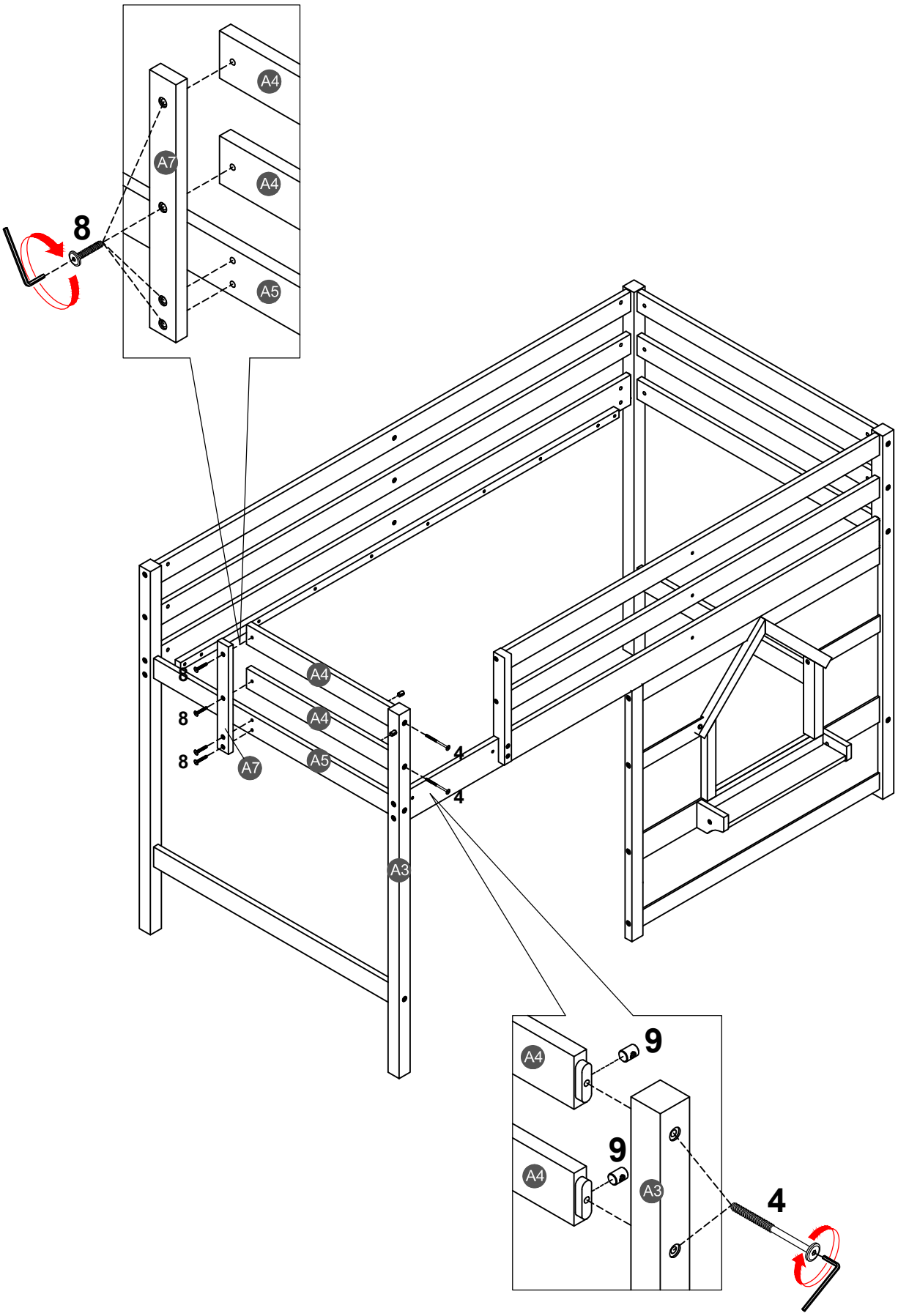

STEP 15:

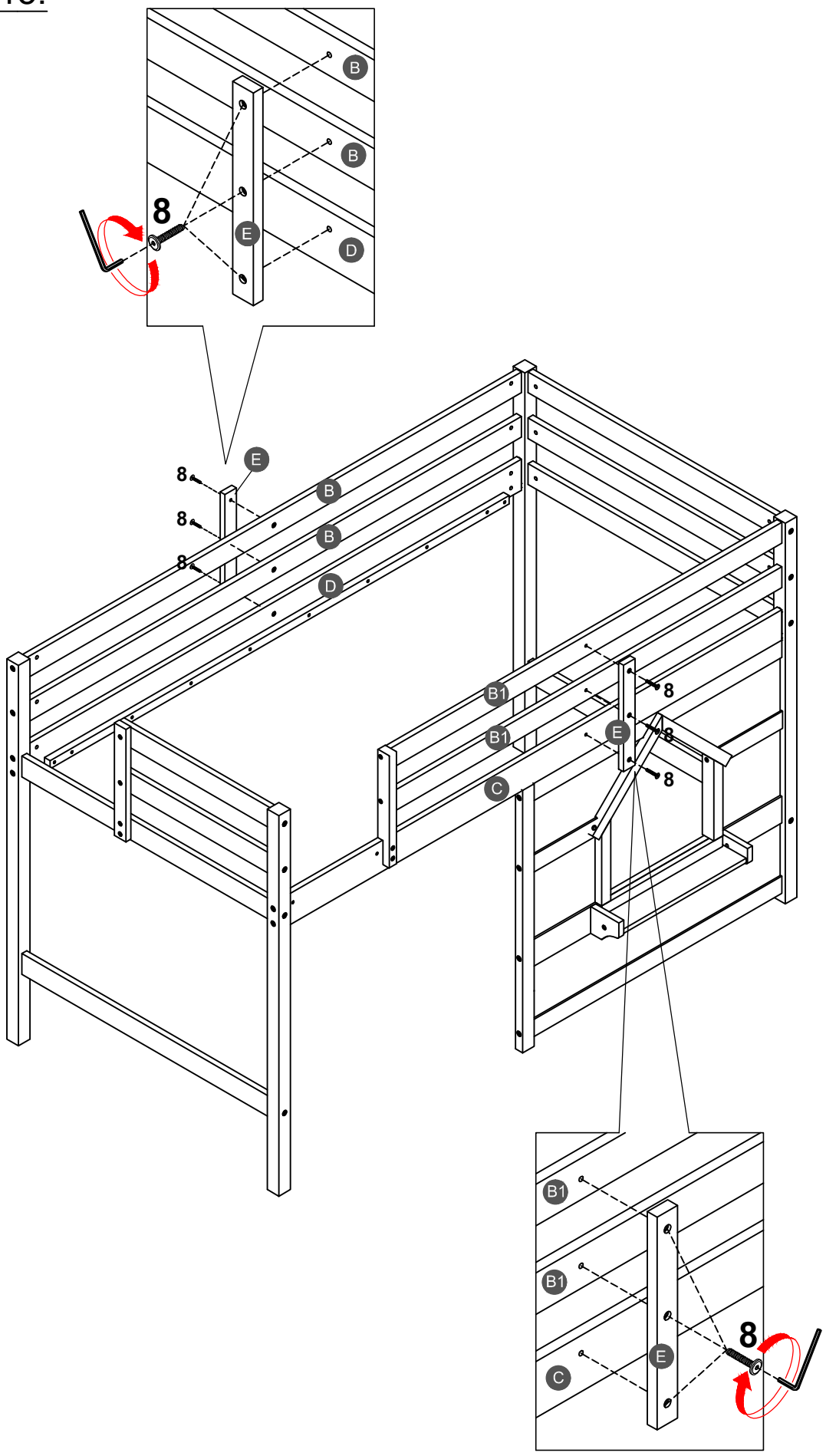

STEP 16:

15	18
8PCS	2PCS

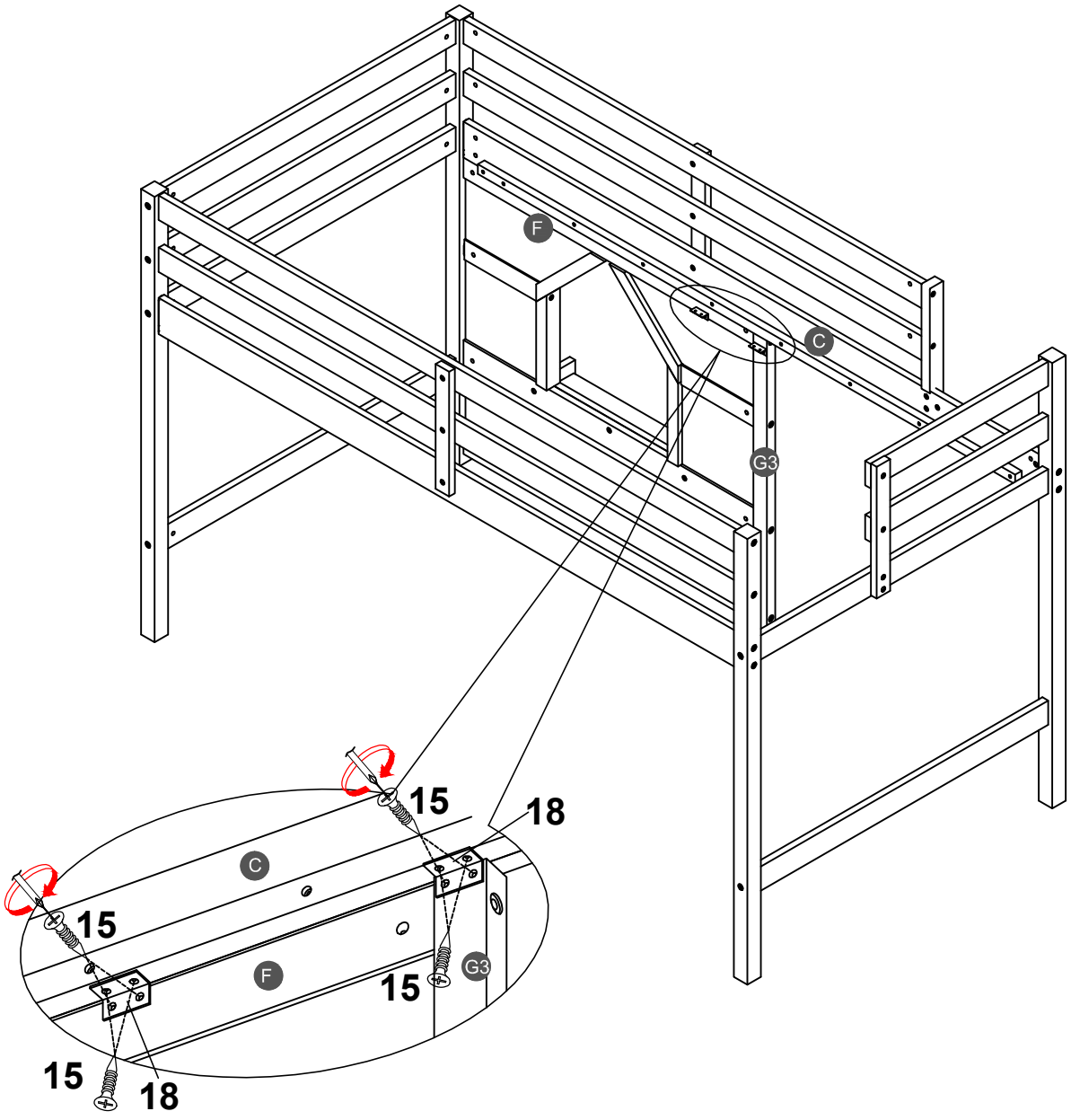

STEP 17:

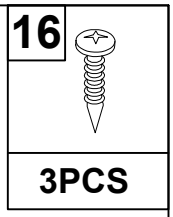

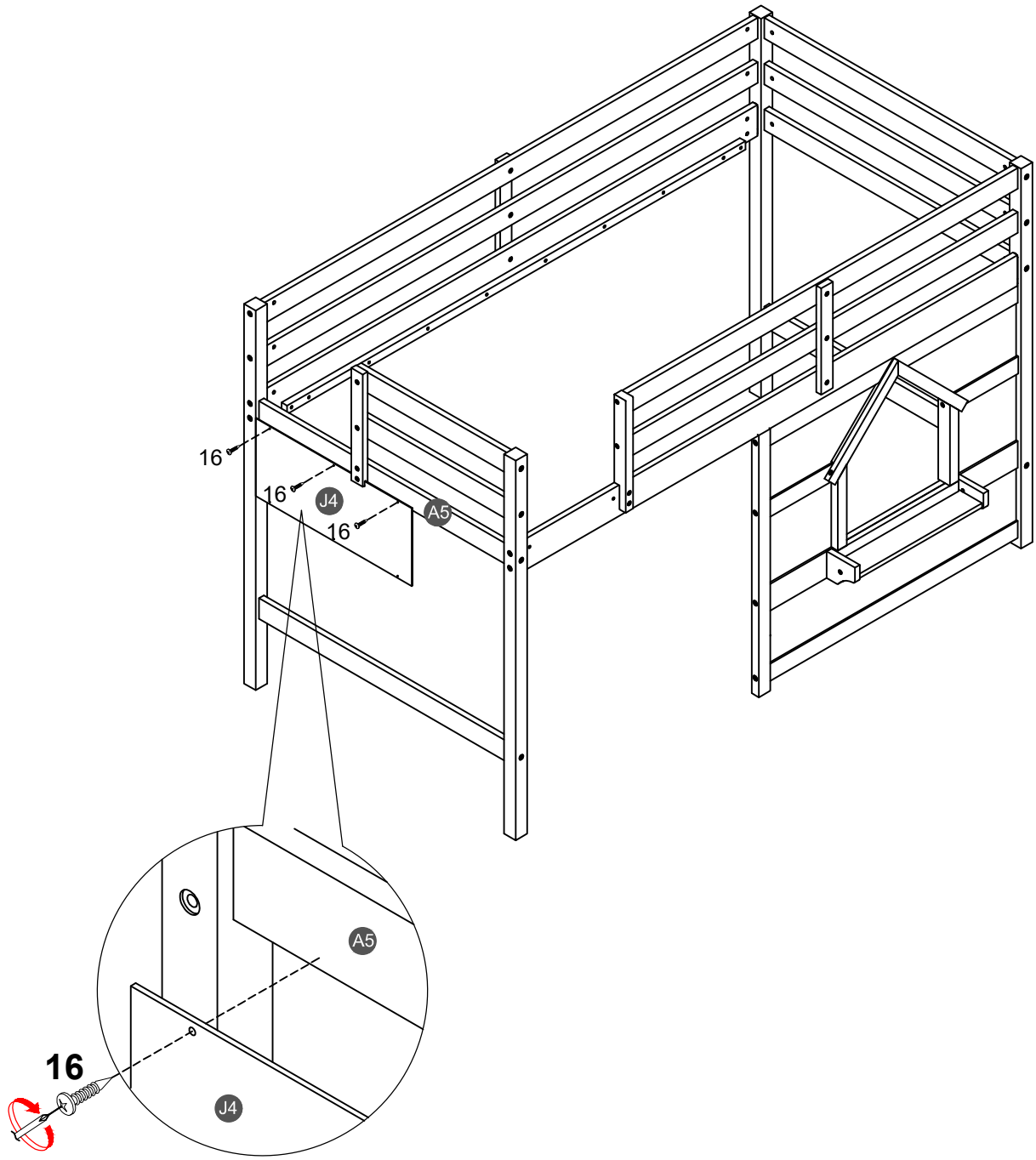

STEP 18:

2	5	9
4PCS	8PCS	8PCS

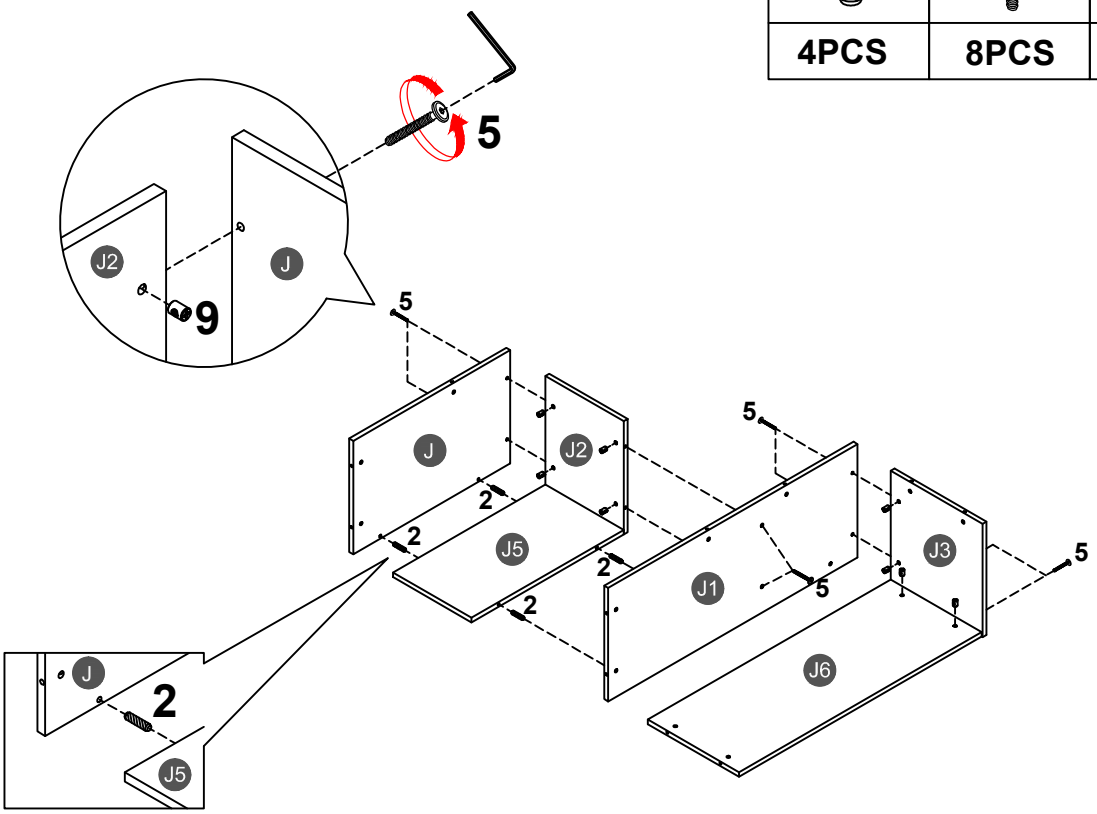

STEP 19:

5	9
6PCS	6PCS

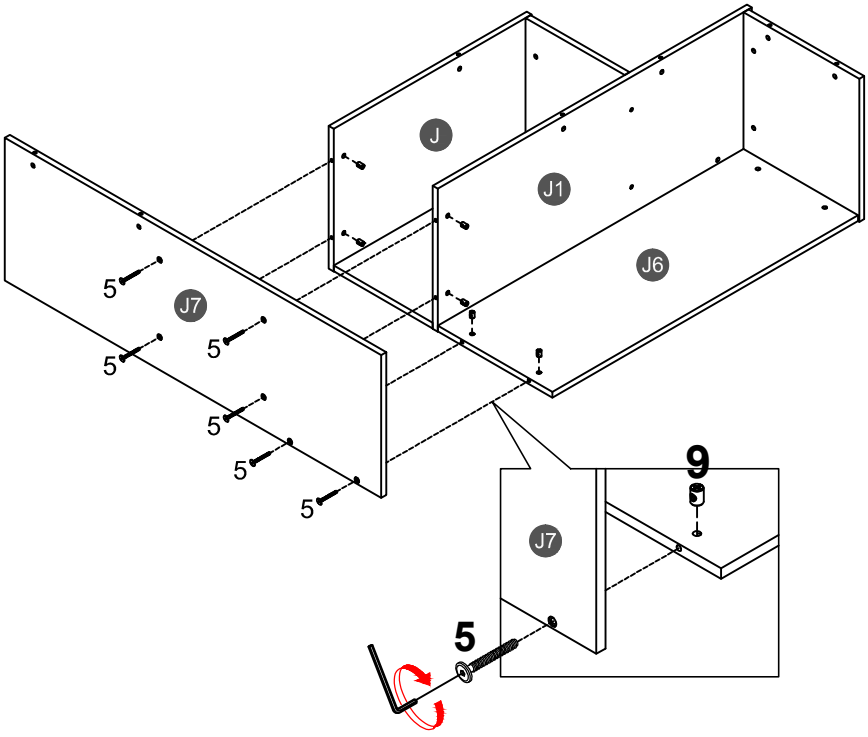

STEP 20:

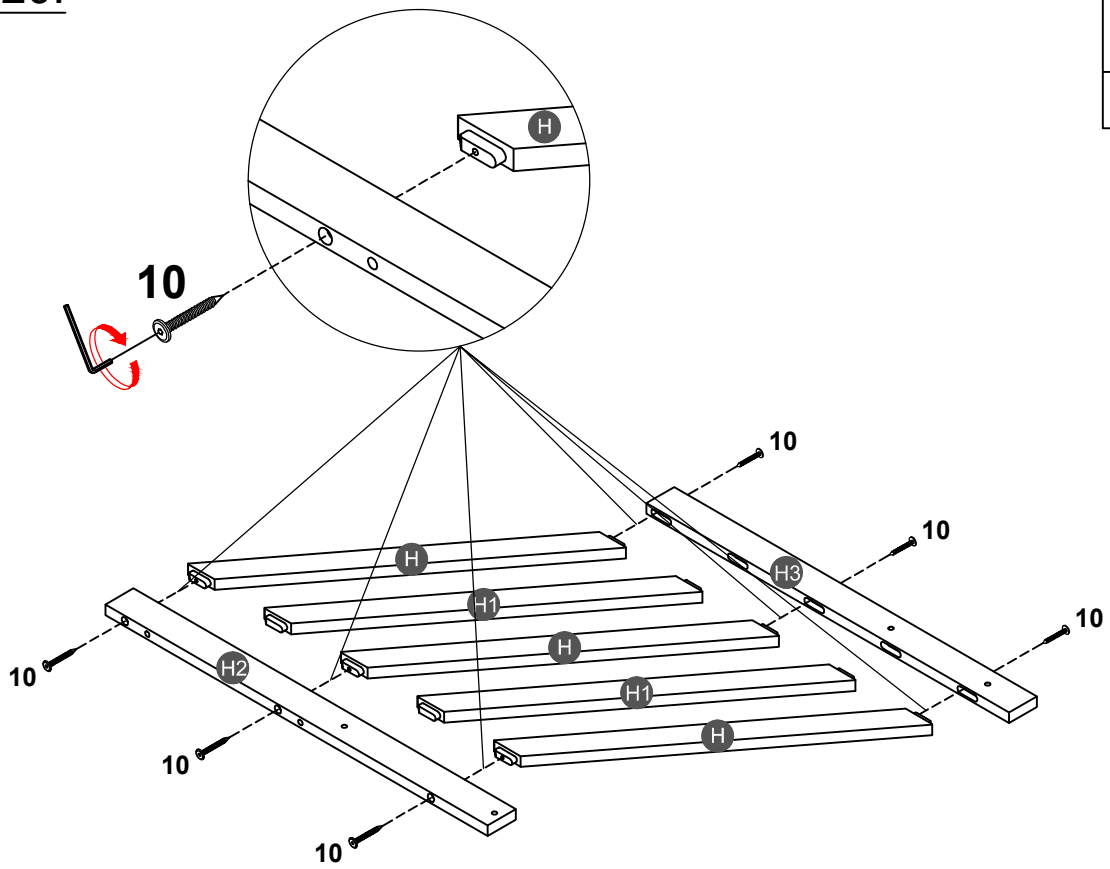

10

6PCS

STEP 21:

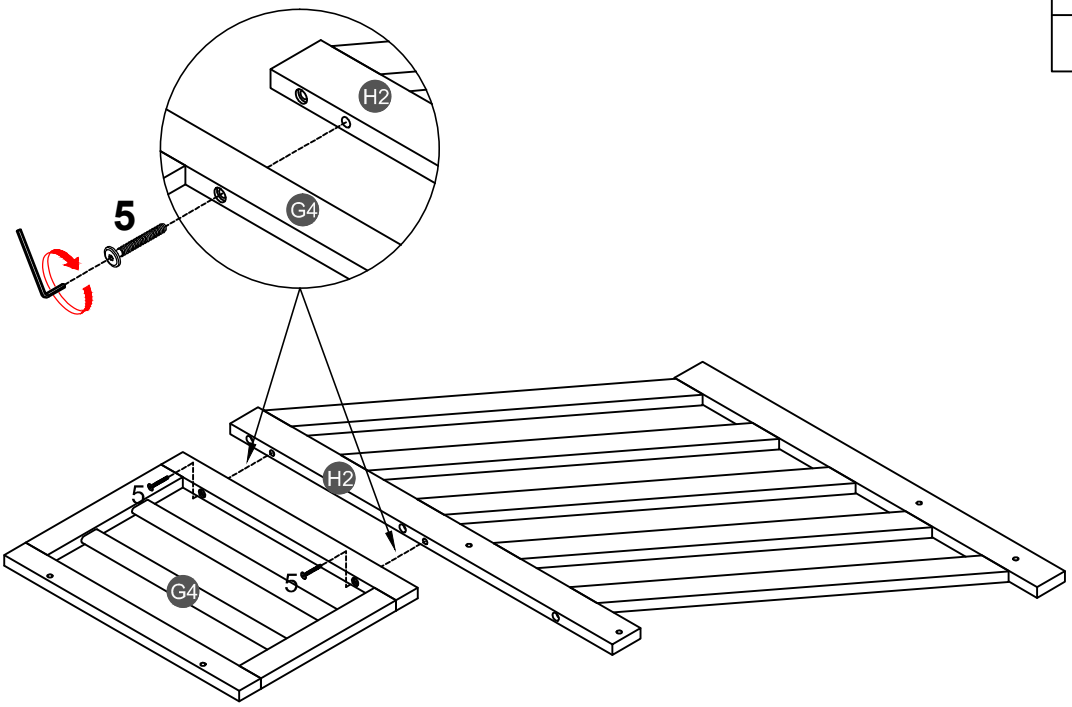

5

2PCS

STEP 22:

5	9
6PCS	6PCS

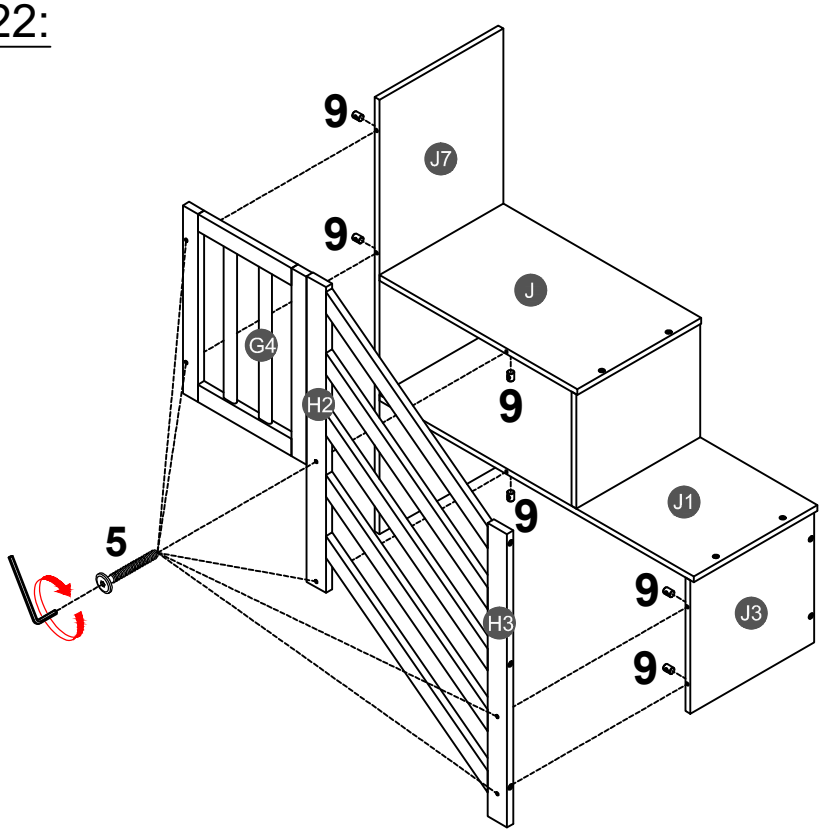

STEP 23:

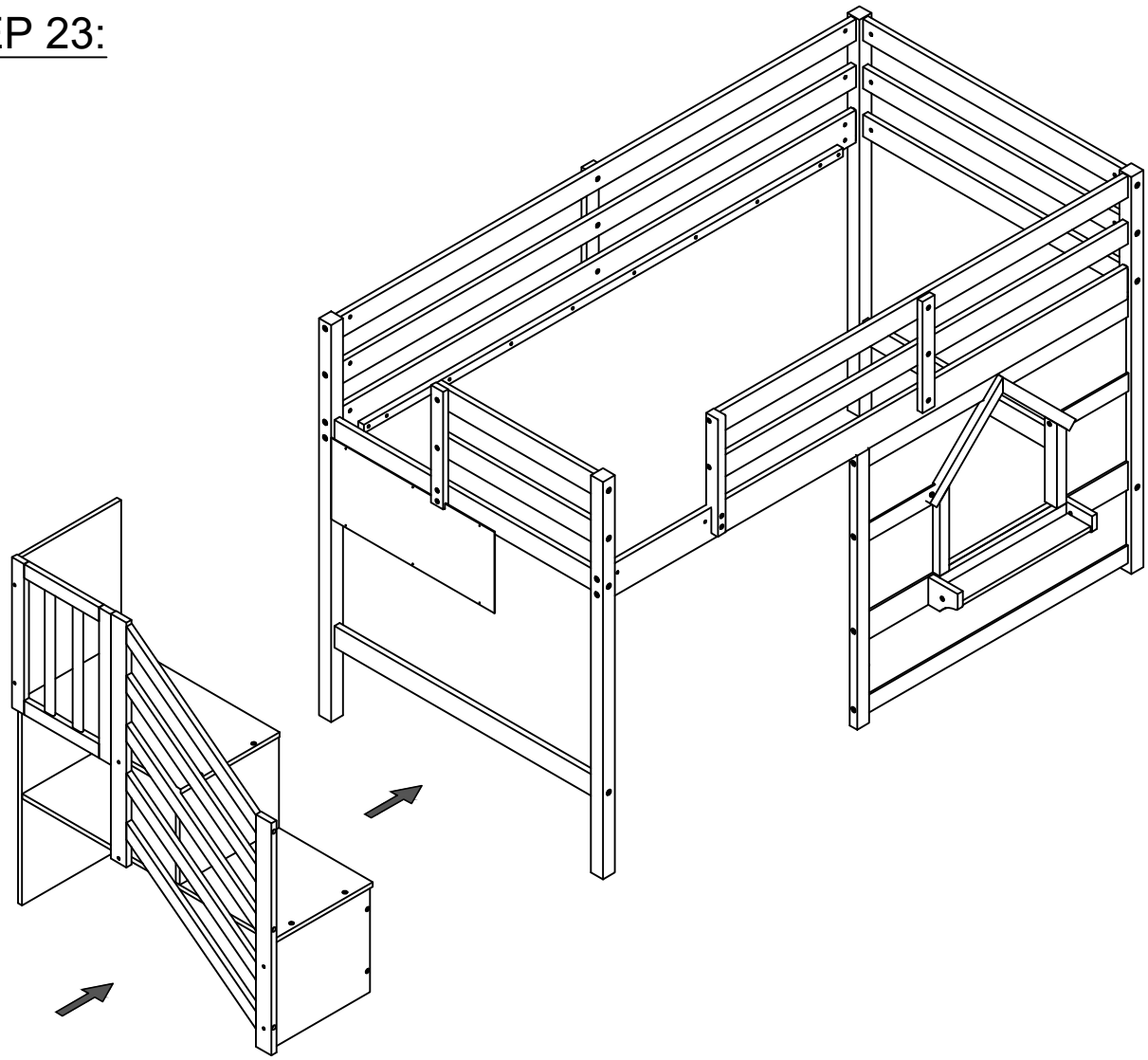

STEP 24:

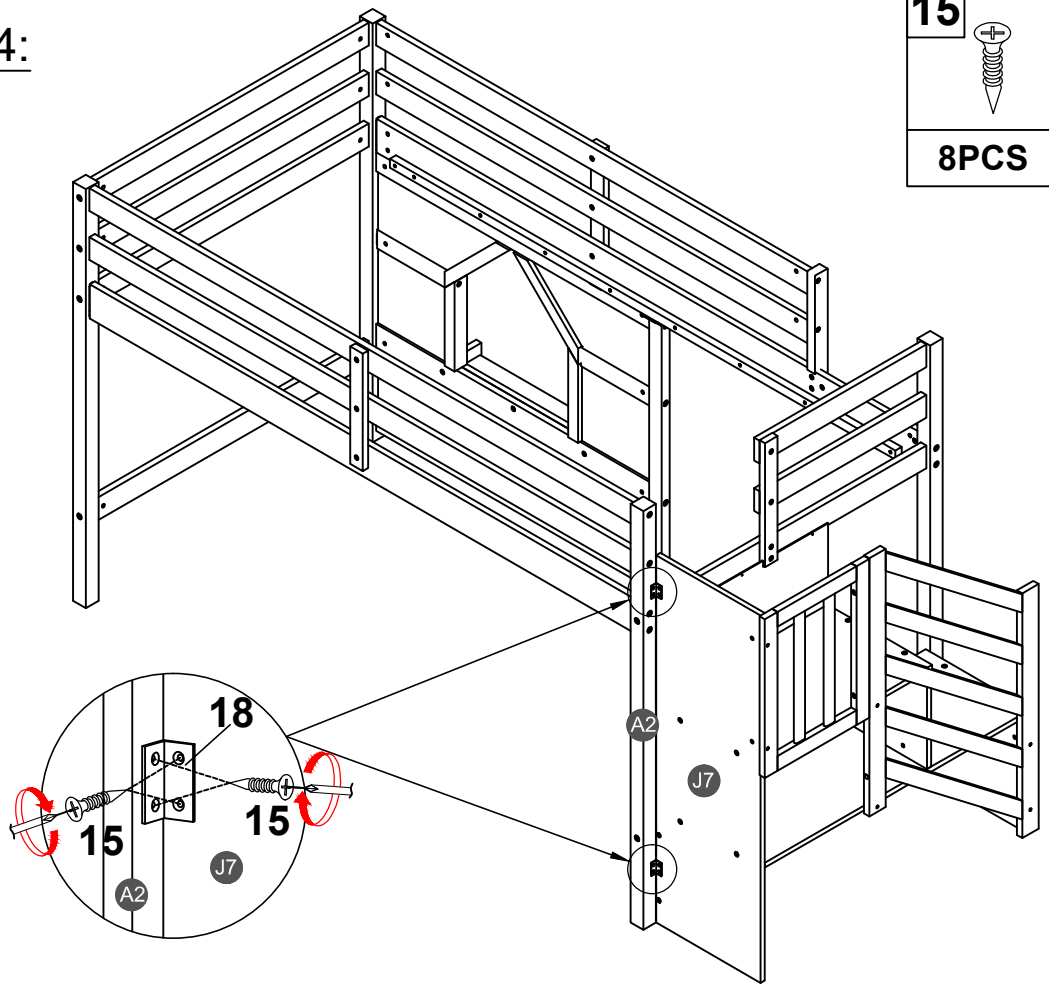

15	18
8PCS	2PCS

STEP 25:

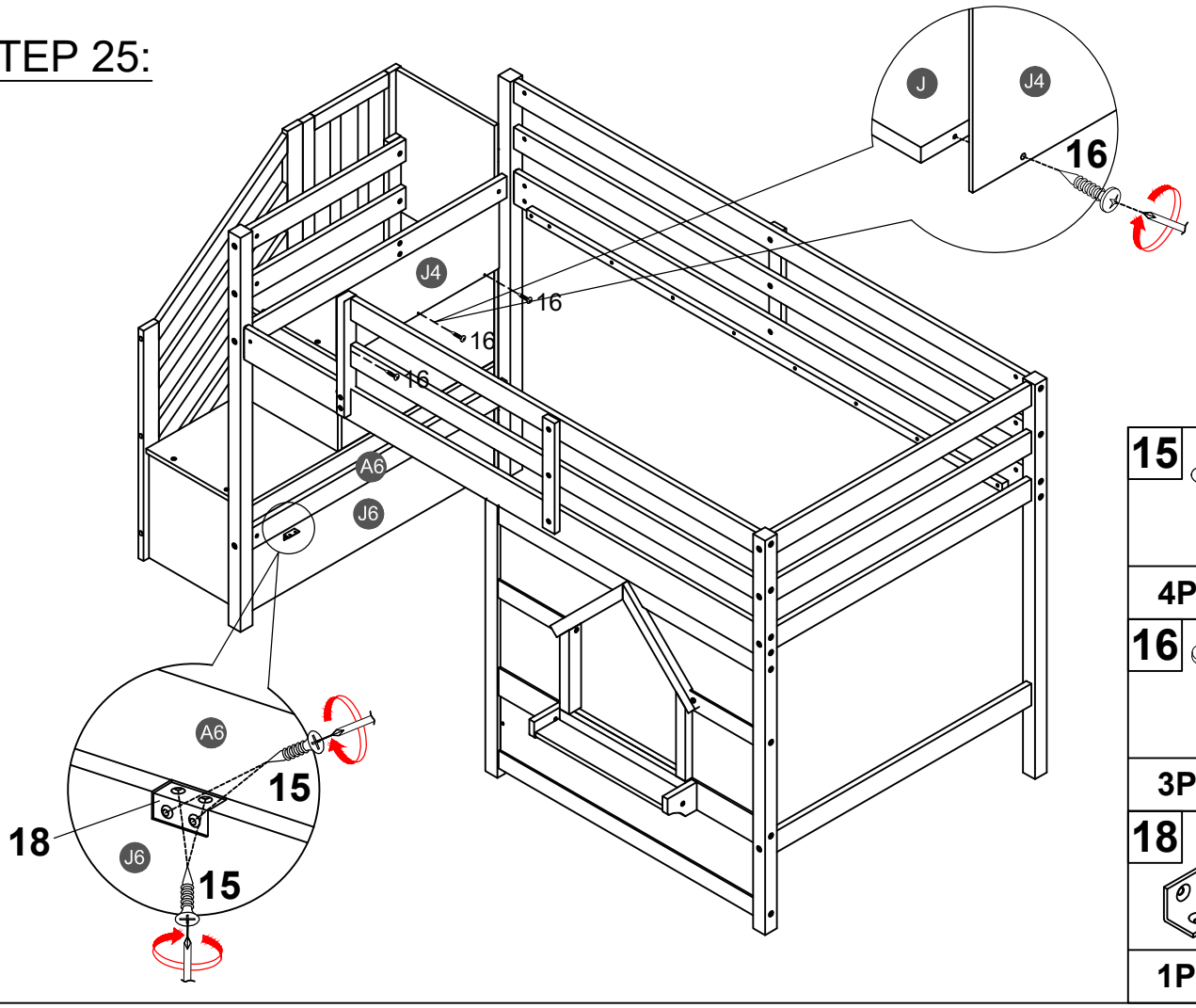

15
4PCS
16
3PCS
18
1PC

STEP 26:

16	19	20	21
1PC	1PC	1PC	1PC

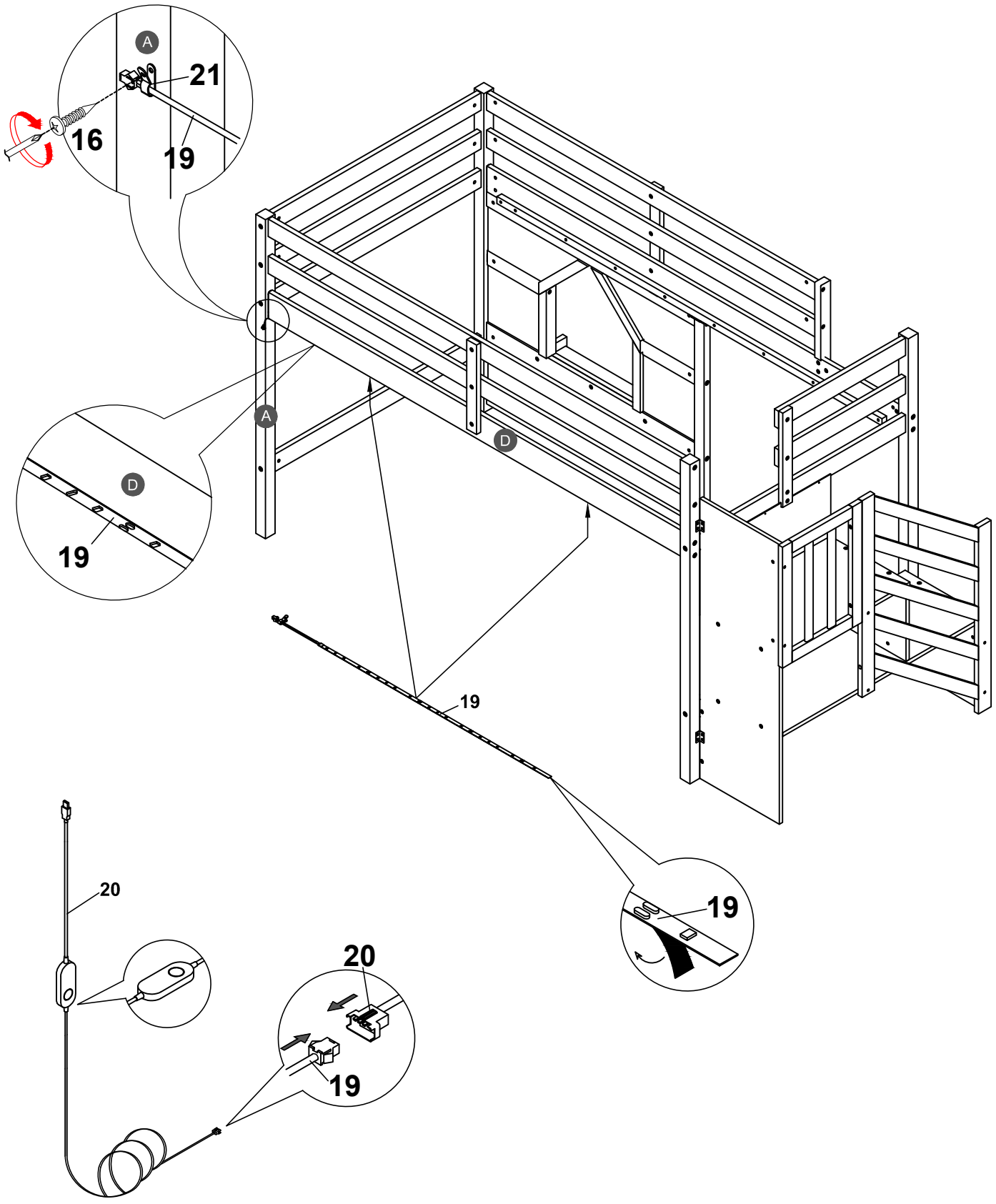

STEP 27:

11	14	17	22
14PCS	4PCS	2PCS	14PCS

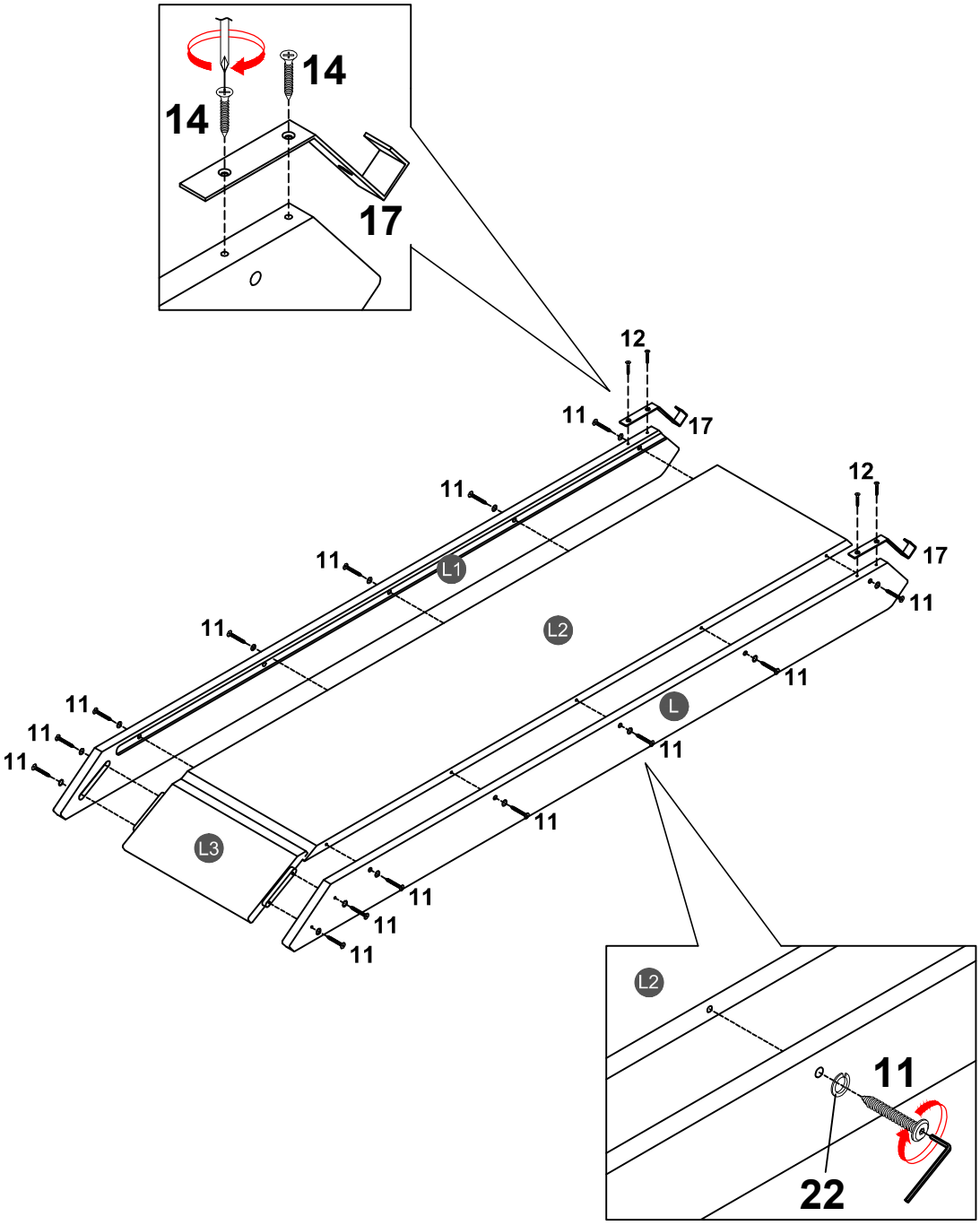

STEP 28:

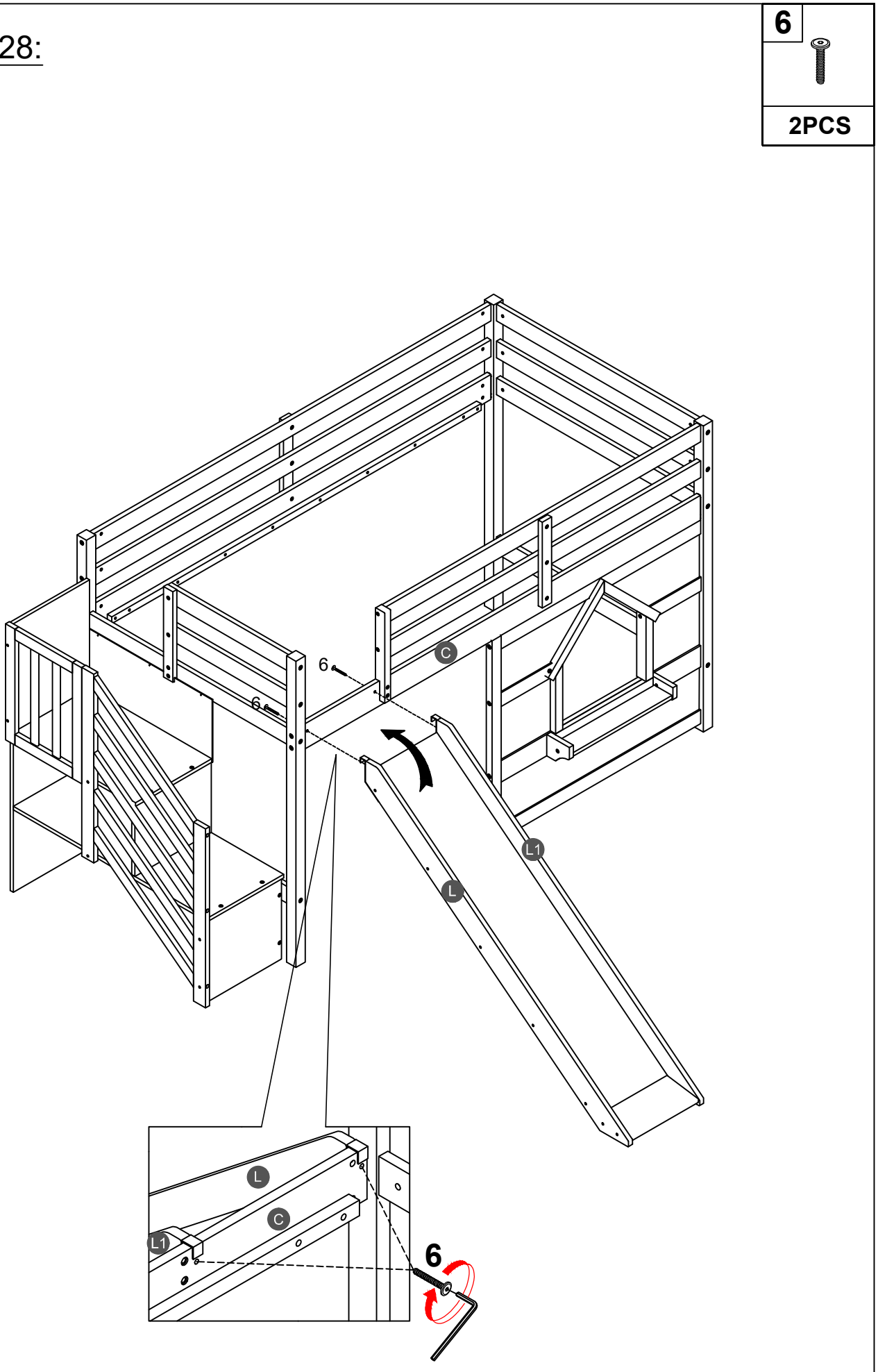

STEP 29:

For better fixing effect, there is no pre-drilled hole on the side rails. Please use self-tapping screws to fix it.

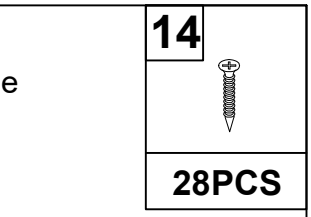

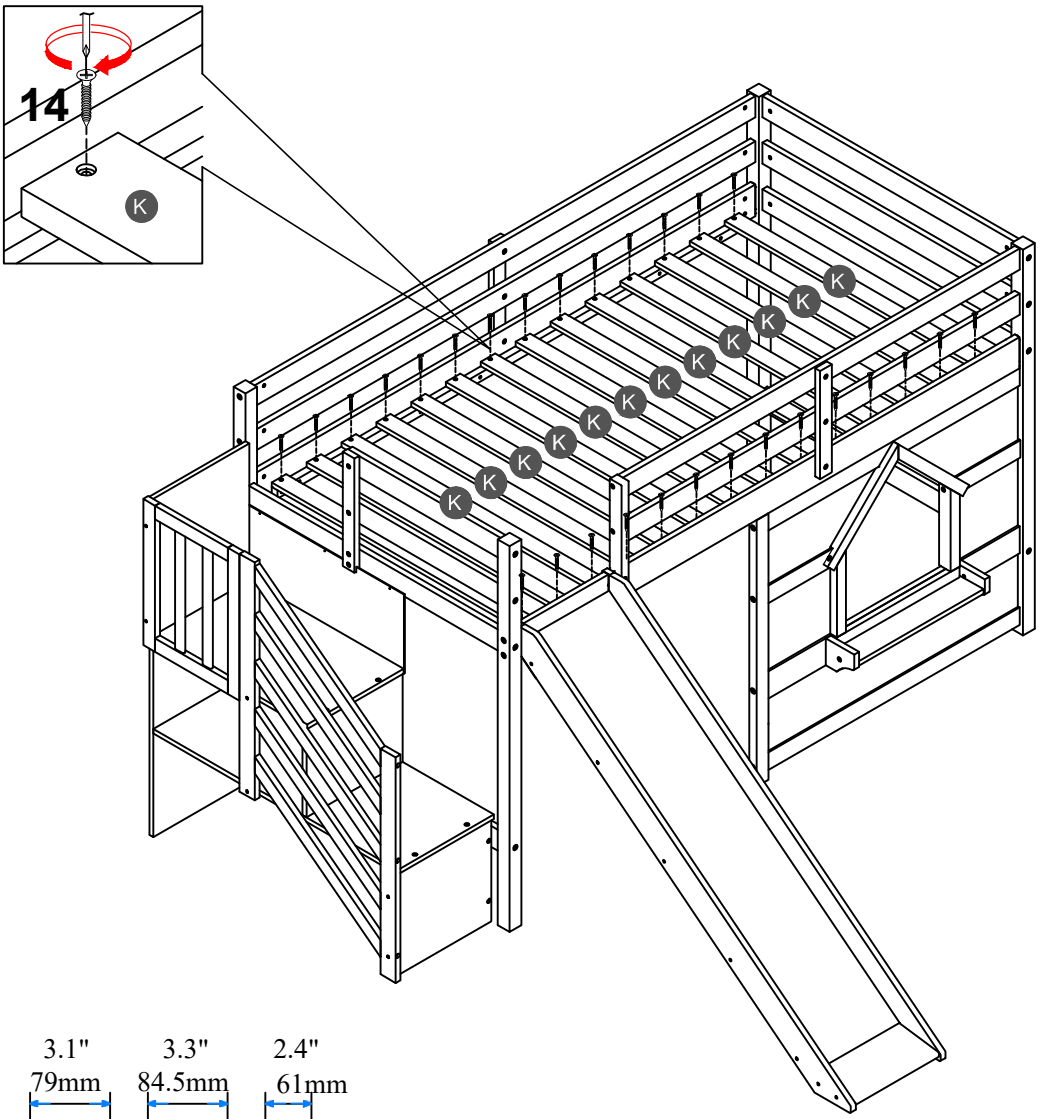

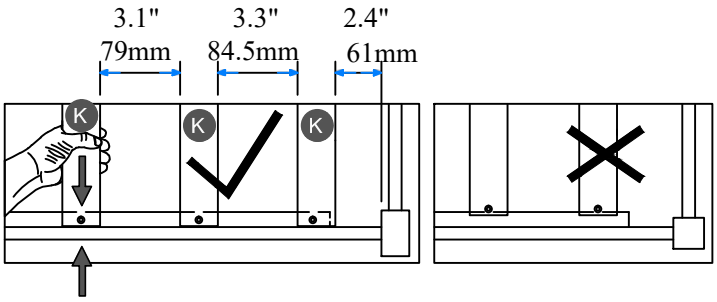

NOTE: Please make sure the bed slats close to the side rail before locking the screws to avoid breakage. This step is required for both the left and right sides. Moreover, please do not lock the screws of the bed slats at the outermost edge to avoid damaging.

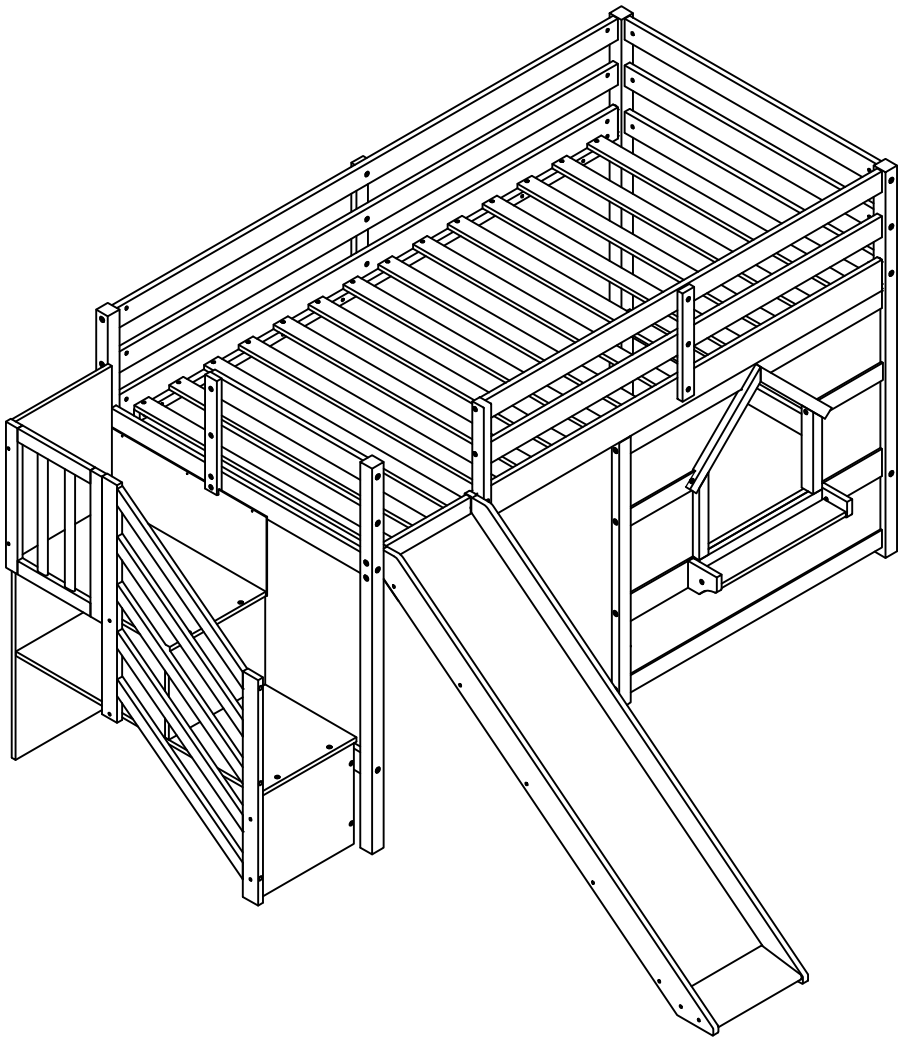

Make sure to tighten all the screws of the bed.