INSTRUCTIONS

Note:

1.Please make sure that the electricity is powered off during installation!
2.Only a professional electrician should install this kind of products!

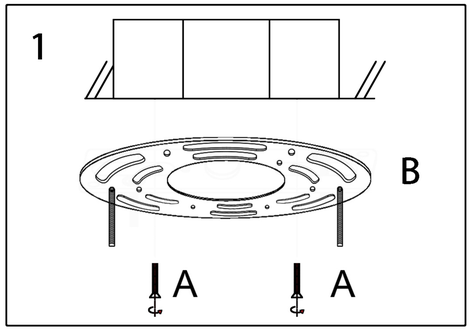

1.Install the bracket B to the ceiling junction box with screw A.

2. Rotate to install the tubes to the canopy, adjust the wire to suitable height you need, and fix the wire by rotate the mini screw.

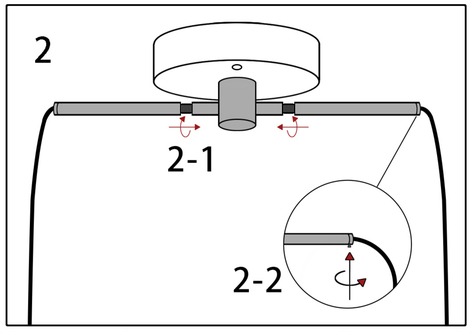

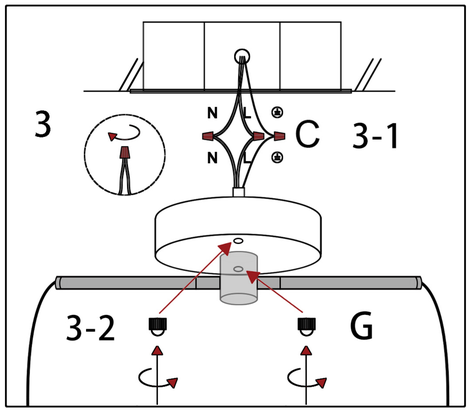

3. Connect the wire to your home line with cap connector C, Install the canopy to the bracket with cap nuts G.

4. Install the lampshade F to the fixture with socket ring E, after that install the bulb.

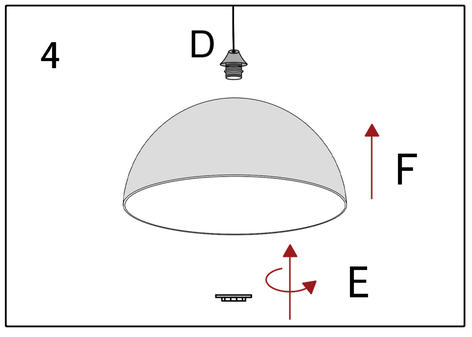

INSTRUCTIONS

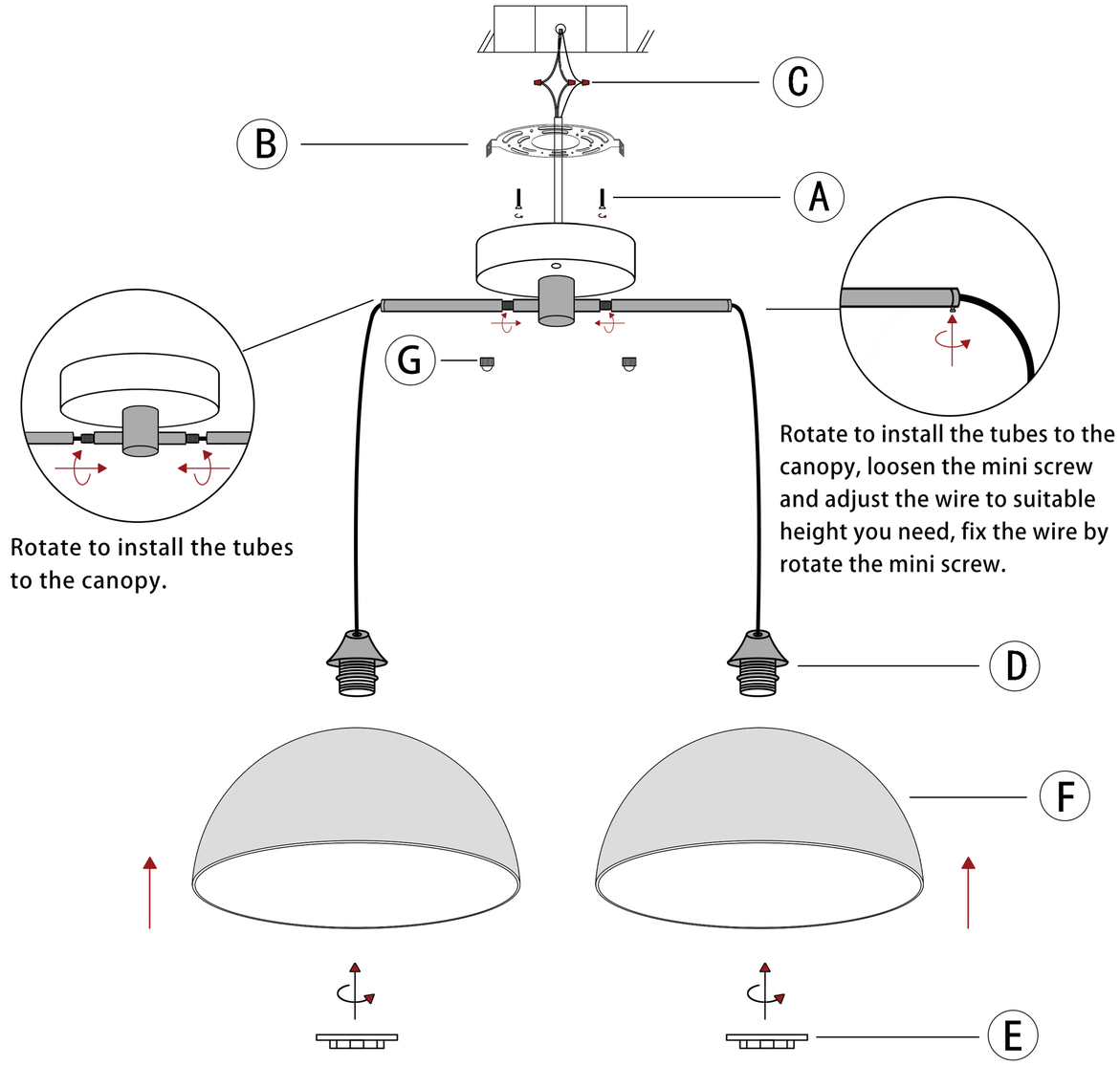

A 3PCS	B 1PCS	C 3PCS	G 2PCS
D 1PCS	E 2PCS	F 2PCS	