Compression sofa instructions
S099#

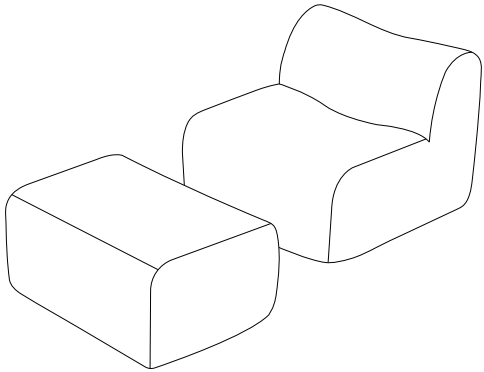

Thank you for purchasing the compress sofa S099#
In order to fully experience the exceptional comfort and function of the sofa,here are some tips for you to recover its shape after removing the packaging.

1.Remove the package and lay the folded up sofa flat on the floor.

2.Remove the plastic bag avoid using sharp instruments or knives etc.to scratch the fabric.

3.Open the sealed bag after the sofa will immediately rebound part,keep the environment ventilated and dry,tap the sofa to help regain full elasticity,after **72 hours** the sofa will be basically rebound complete.

4.Due to the characteristics of the compressed sofa itself,there are obvious creases on the fabric cover when it is first opened. In order to make it flat faster,an **steam-iron** can be used to flatten it.

5.During the use of the sofa,be careful not to keep the floor damp for a long time to avoid mold caused by lack of ventilation.

6.If dirt/oil stains occur during use,please use a specialized fabric cleaner for cleaning.

Then enjoy the experience of the S099#

Compress sofa assembly instruction

***Read the instructions before installation.**

1

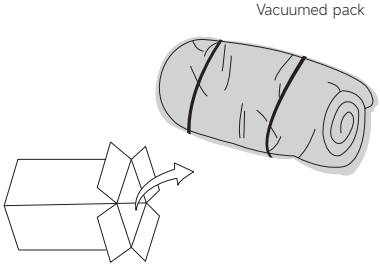

NOTES: Do not use sharp objects to open the outer carton box.

2

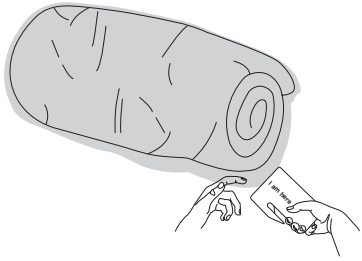

Unpacking the plastic bag.

3

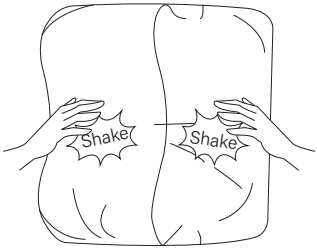

Fully pat and shake the inner cushion for about **10** minutes sure foam evenly filled in the inner bag.

4

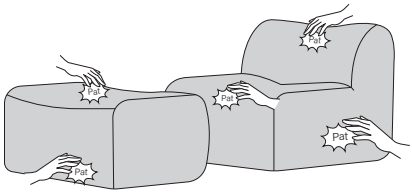

Place the sofa in an upright position,
leave the inner cushion to expand for **72** hours.
Pat and organize the outer shape of sofa.

5

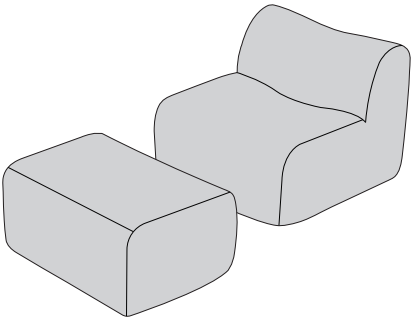

Now you get a perfect Special-shaped sofa.