INSTRUCTION MANUAL

RATTAN CHEST WITH 3 DRAWERS

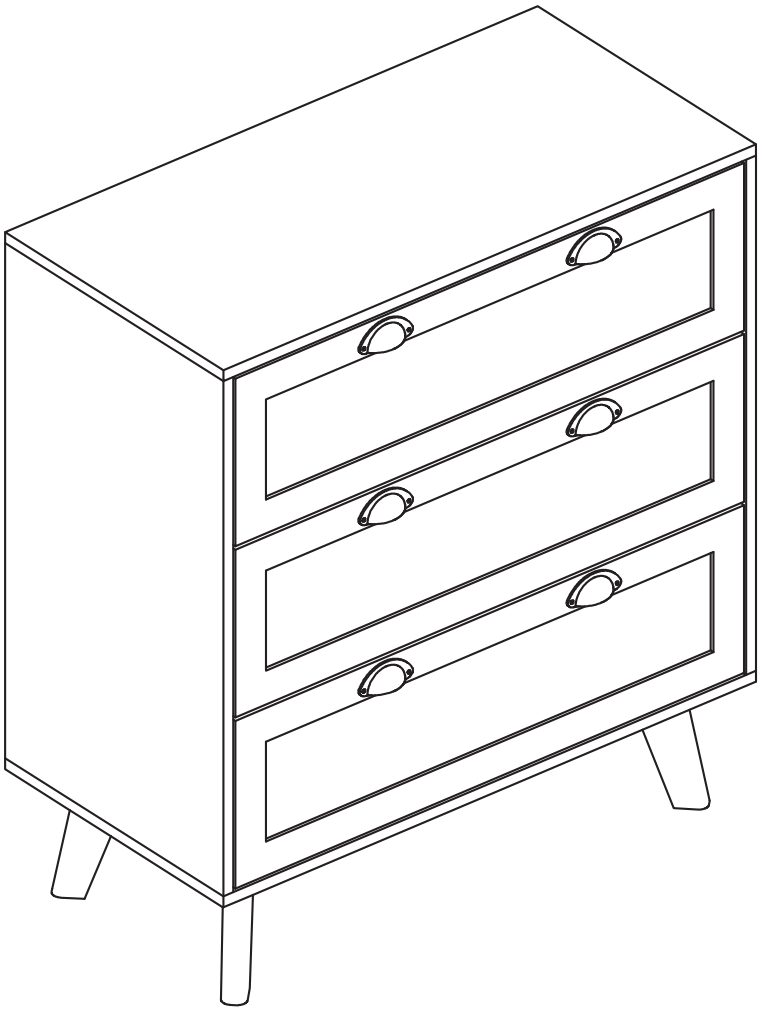

Estimated Time for Assembly

90 min

Weight Limitation (Evenly)

176 lb overall

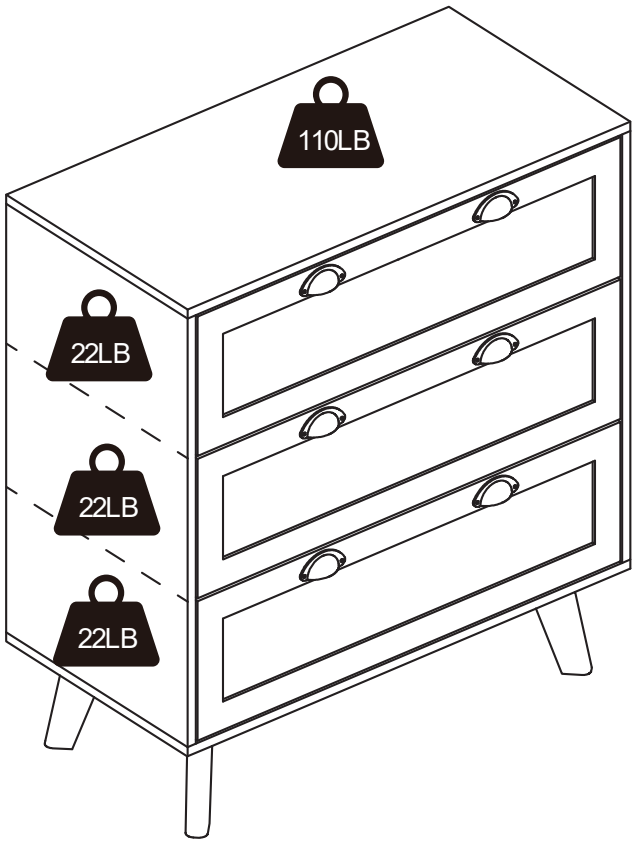

Tools Needed (Not included)

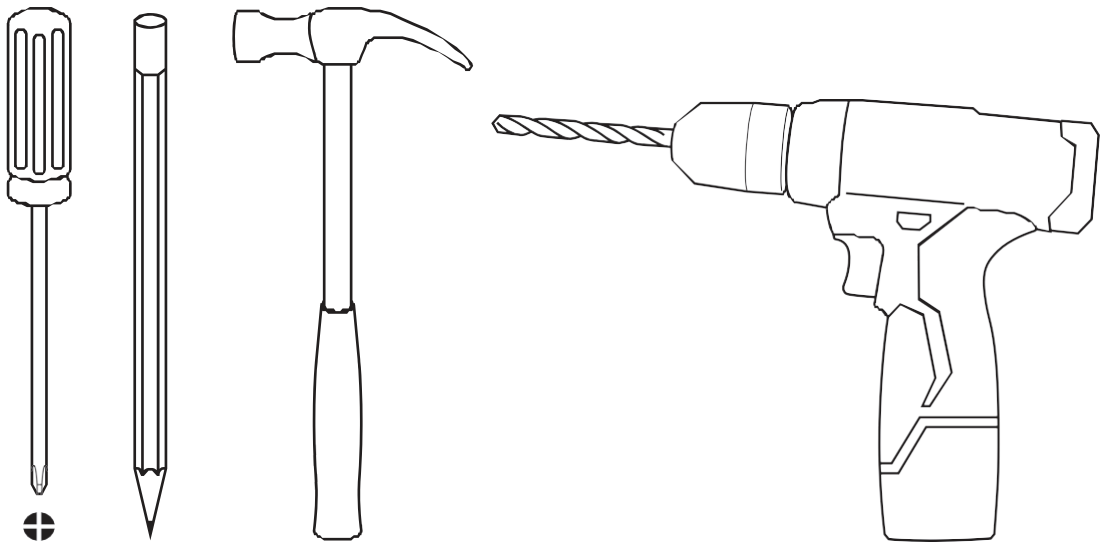

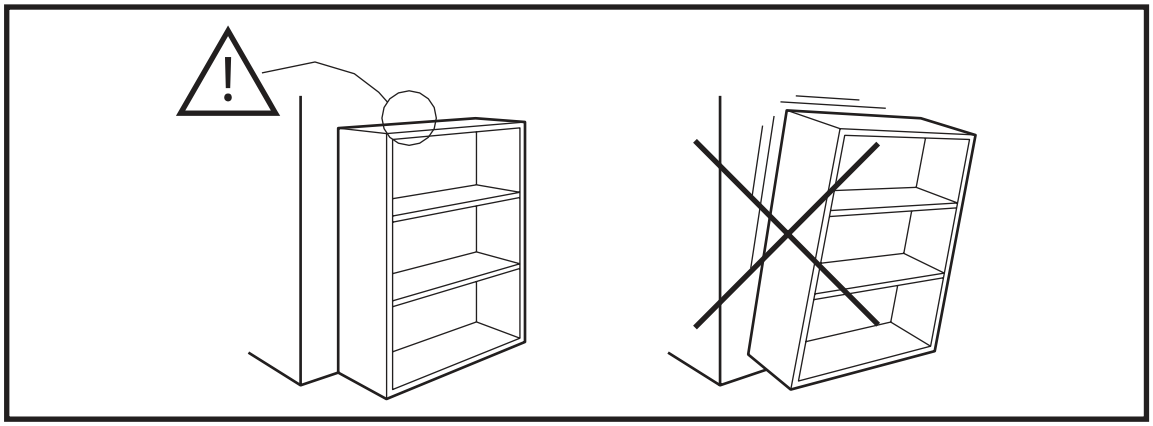

Warning

Serious or fatal crushing injuries may occur if the furniture tip-over.
Furniture must be permanently fixed to the wall with included anti-tipping device to prevent the furniture from tipping over.

Different wall materials require different types of fixing device. Use suitable fixing device to secure the stability and load bearing capacity of the furniture.
If you are uncertain about which type of fixing device to use, please contact your local hardware store.

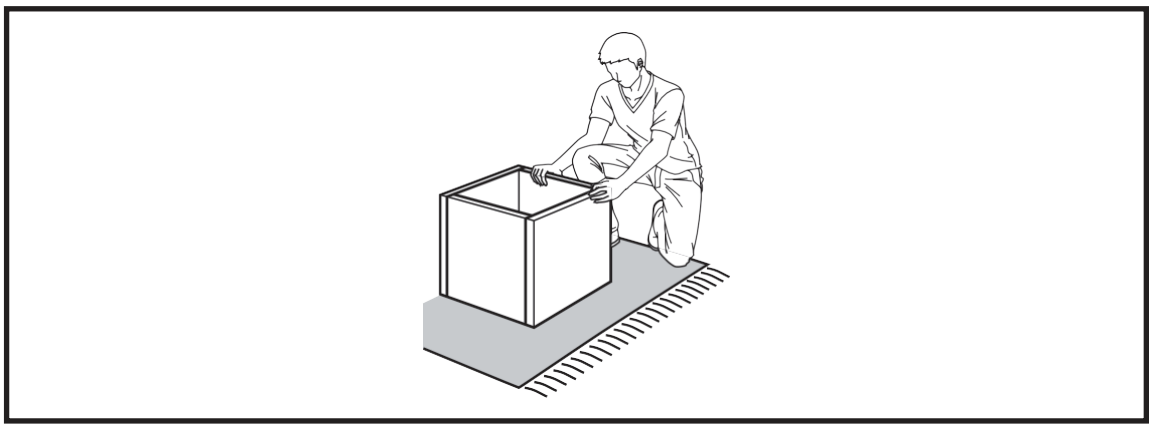

Assemble the furniture on empty carton, carpet, or rug to prevent scratches or damage.

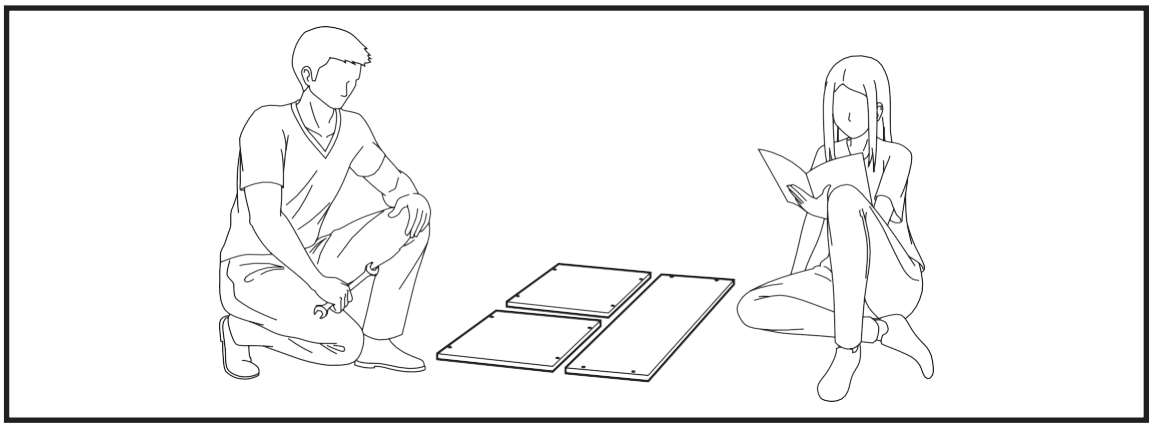

This furniture requires 2 people to assemble.

Make sure no parts are missing or damaged before assembly.

PART LIST

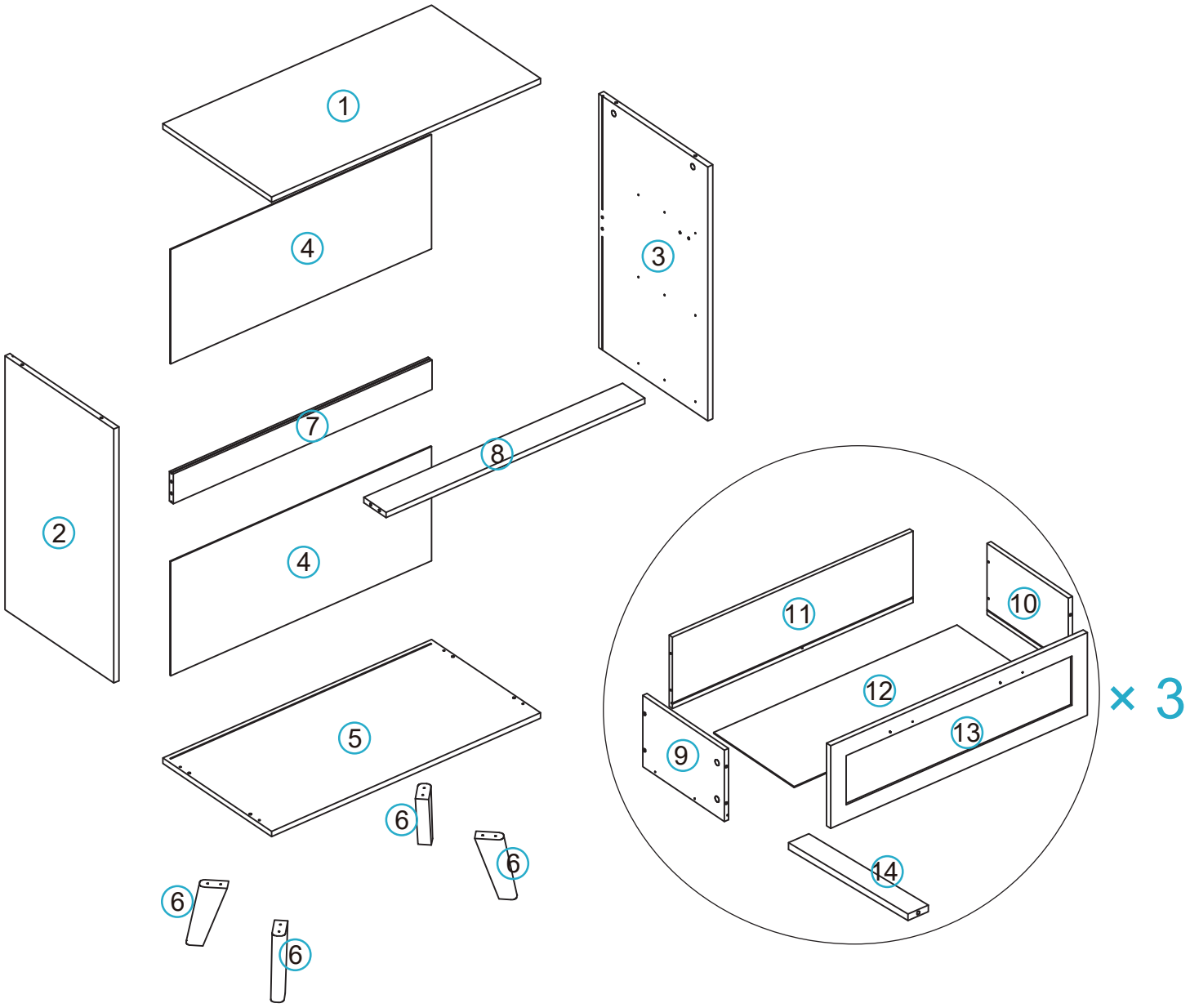

HARDWARE LIST

A	B	C	D	E
4PCS	21PCS	27PCS	27PCS	30PCS
F	G	H	I	J
16PCS	4PCS	4PCS	2PCS	2PCS
K	L	M	N	O
8PCS	10PCS	3PCS	3PCS	6PCS
P	Q	R		
12PCS	8PCS	1PC		

Step 1.

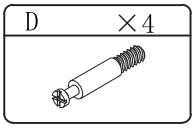

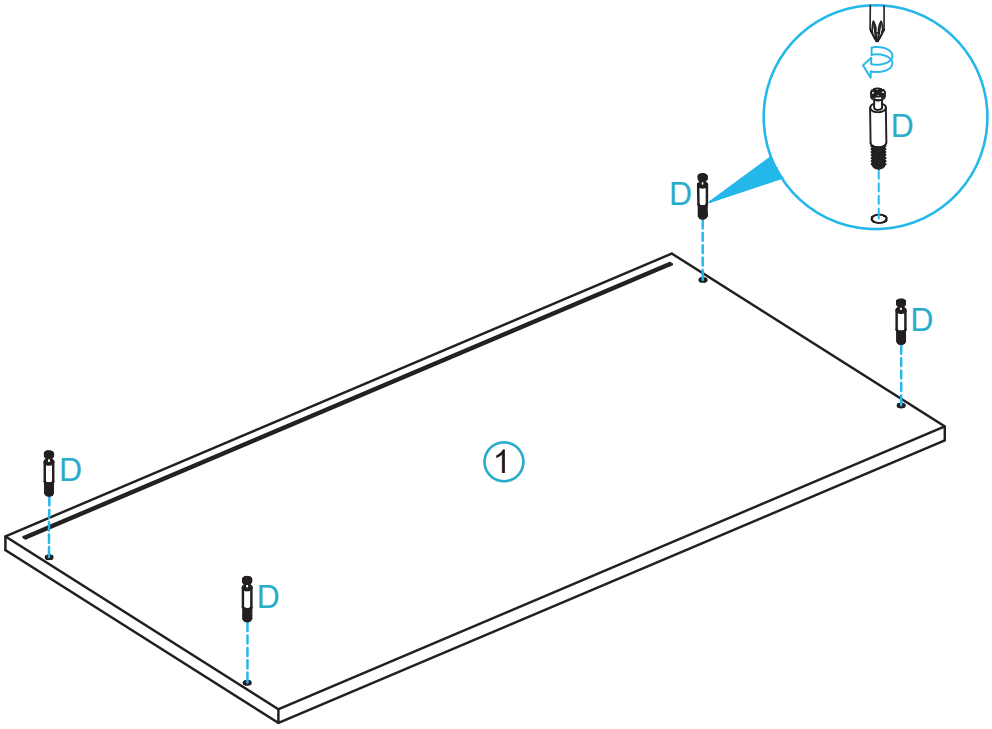

Step 2.

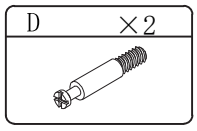

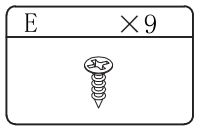

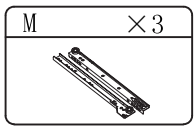

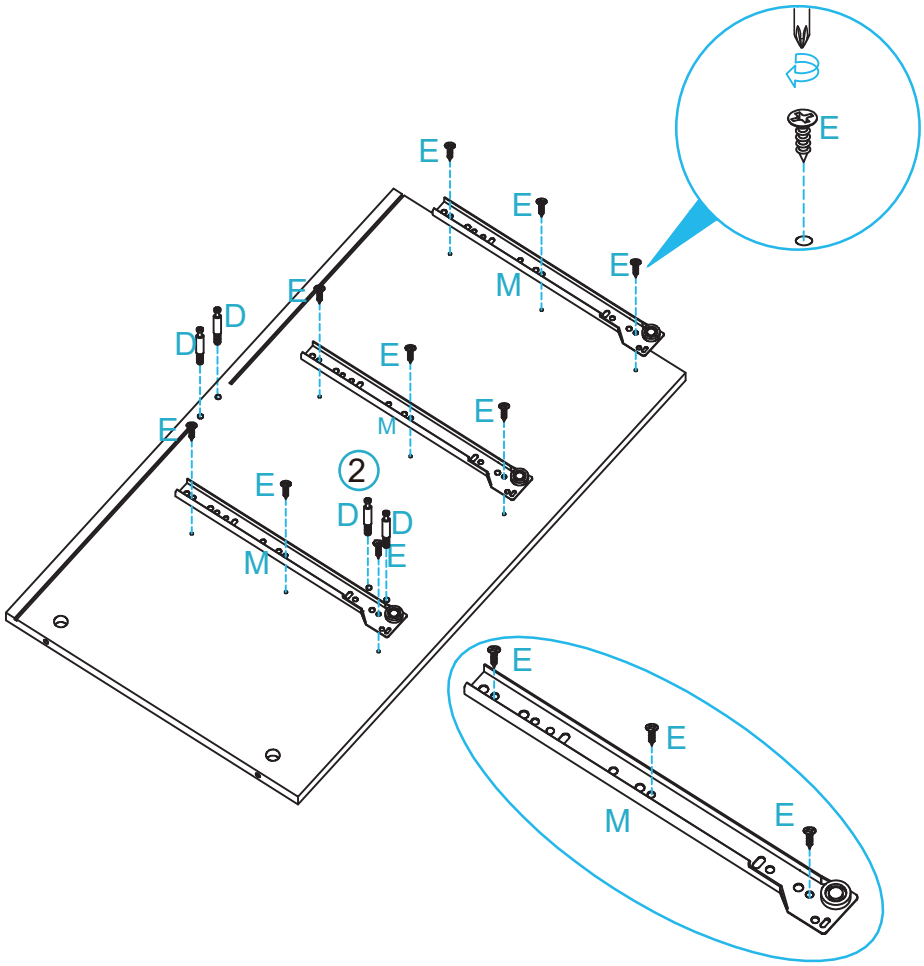

Step 3.

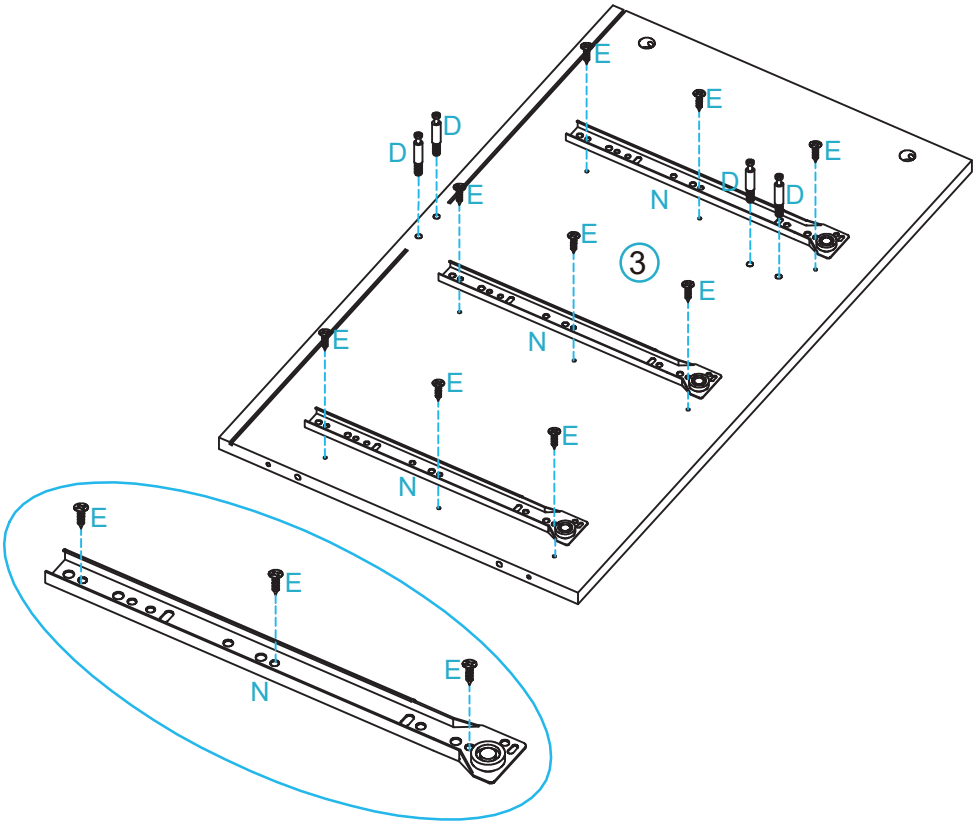

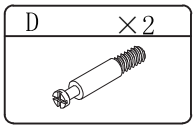

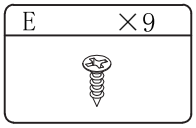

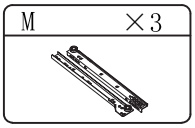

Step 4.

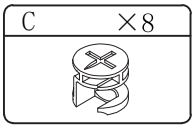

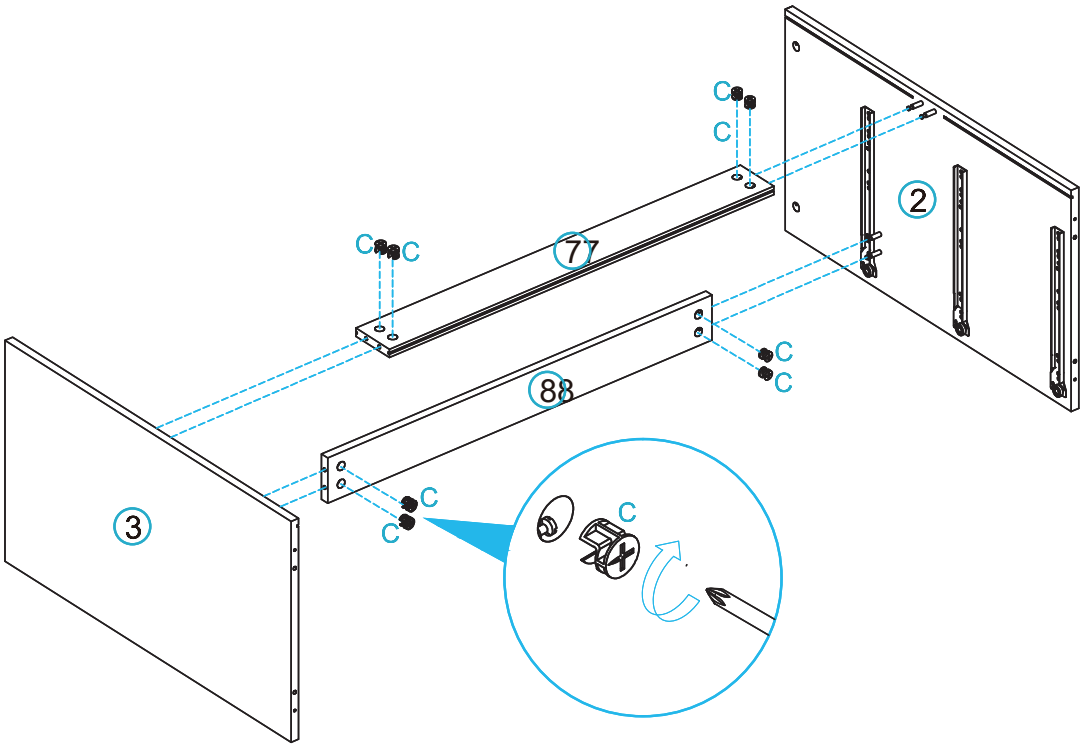

Step 5.

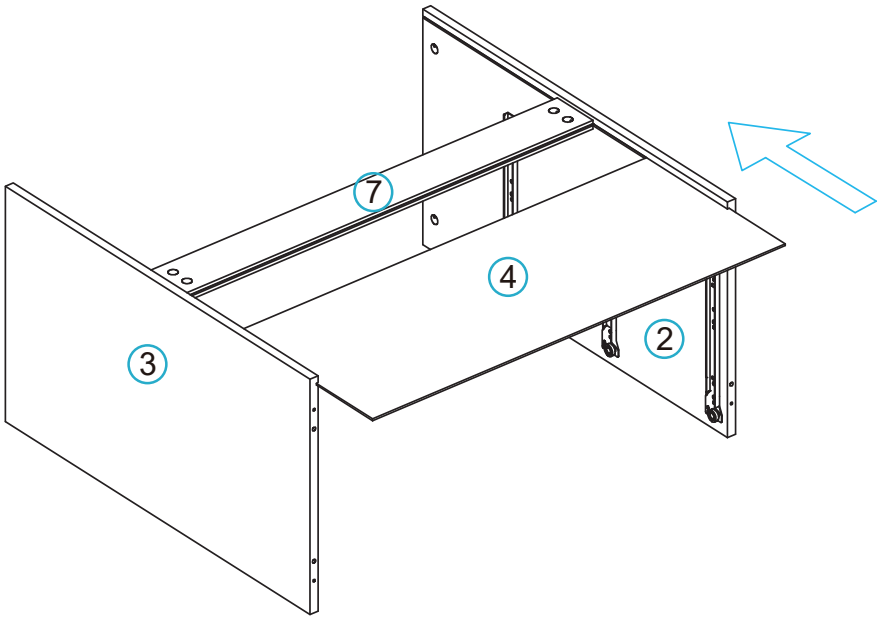

Step 6.

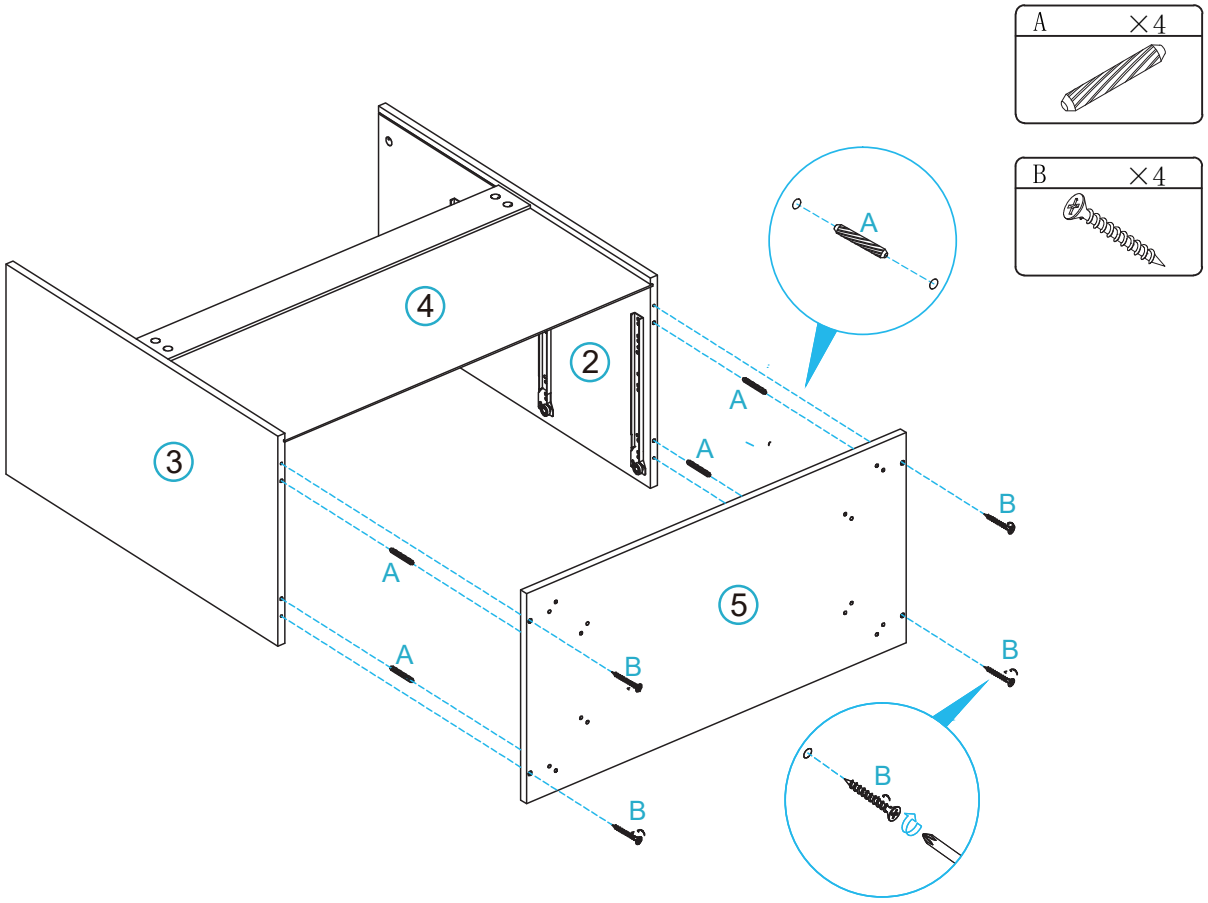

Step 7.

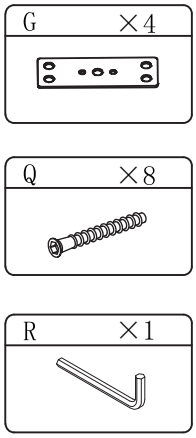

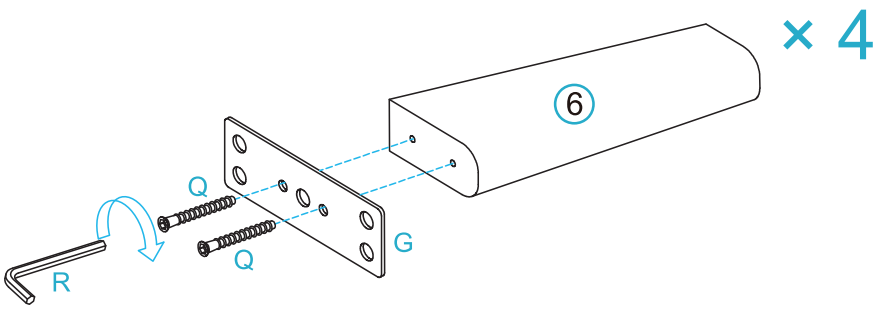

Step 8.

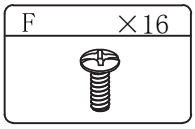

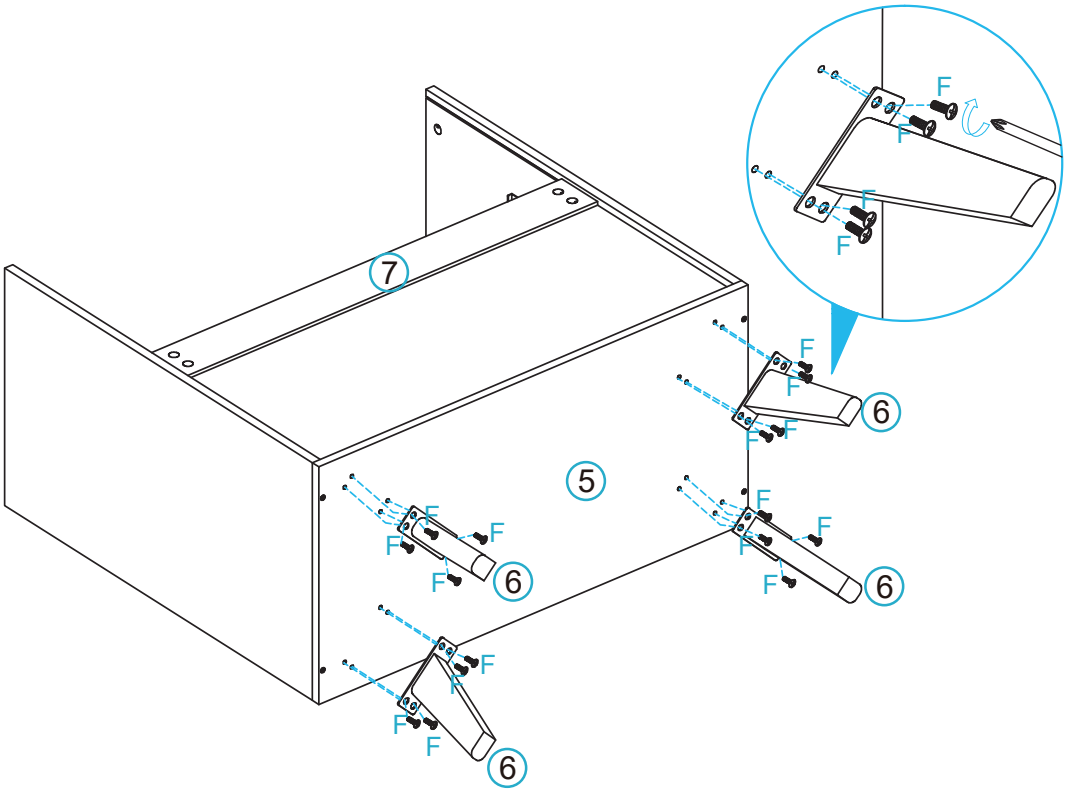

Step 9.

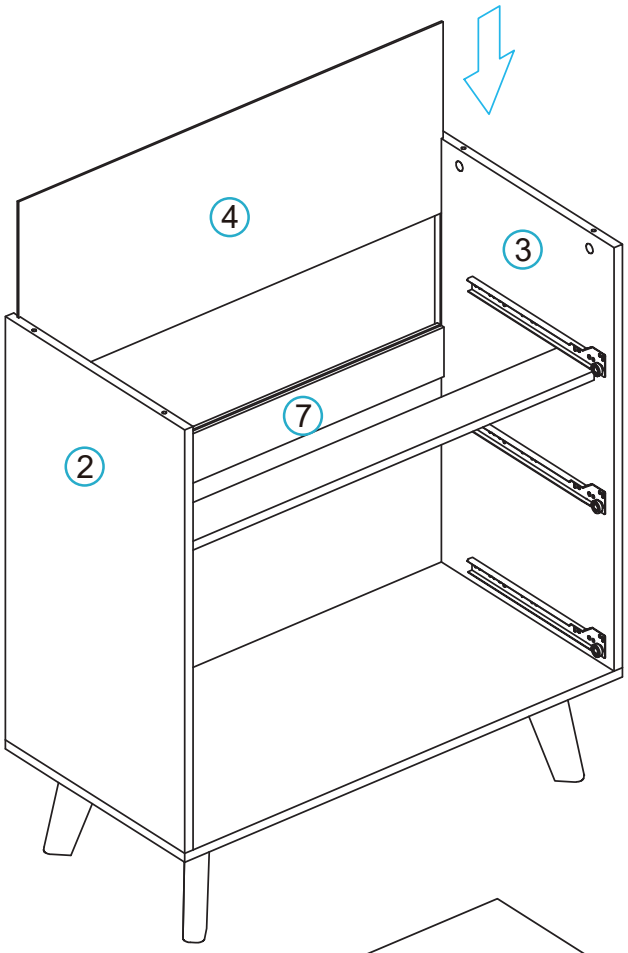

Step 10.

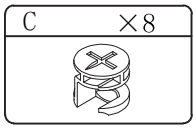

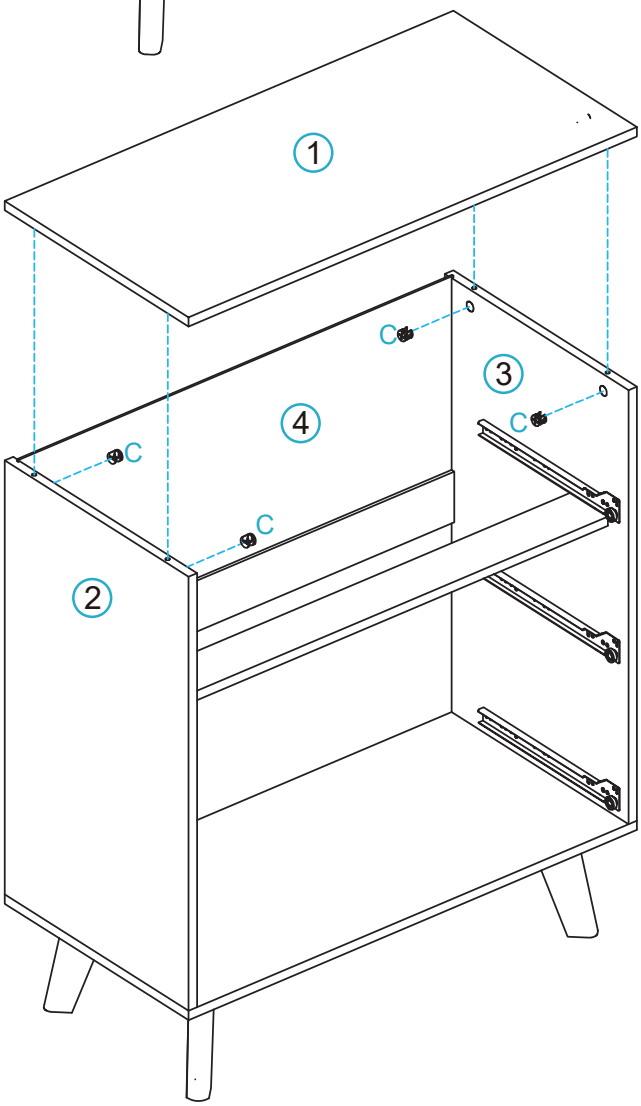

Step 11.

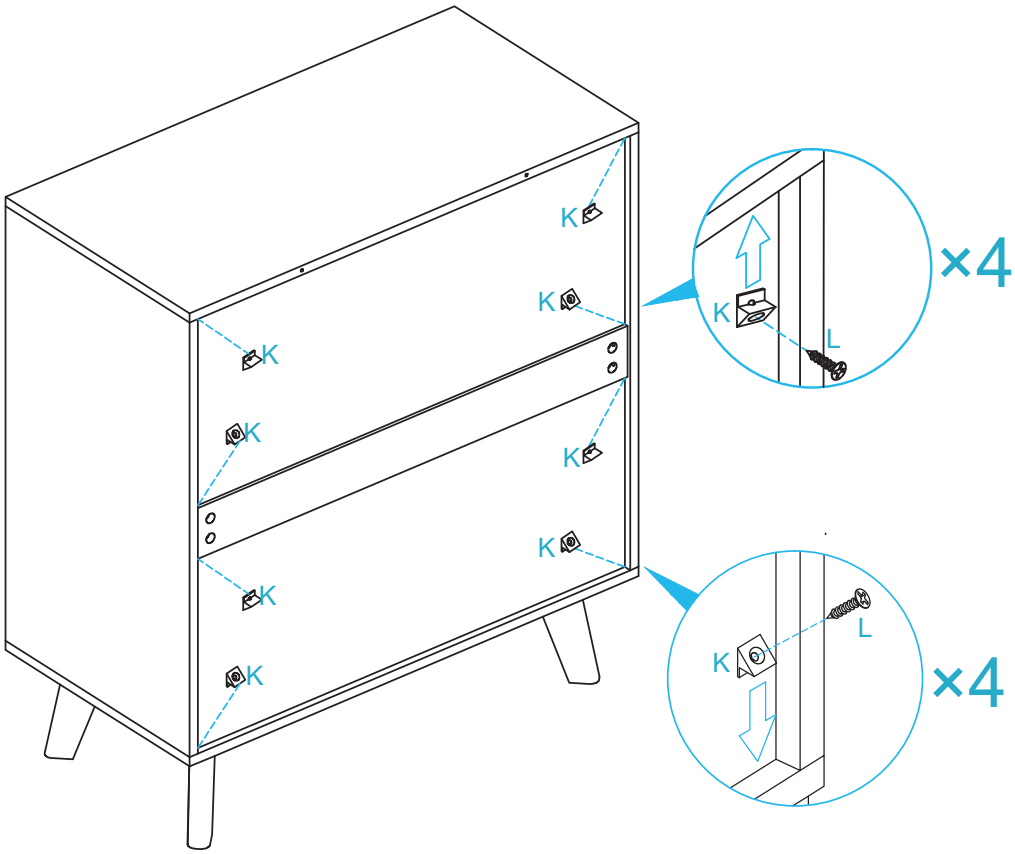

K	×8
L	×8

Step 12.

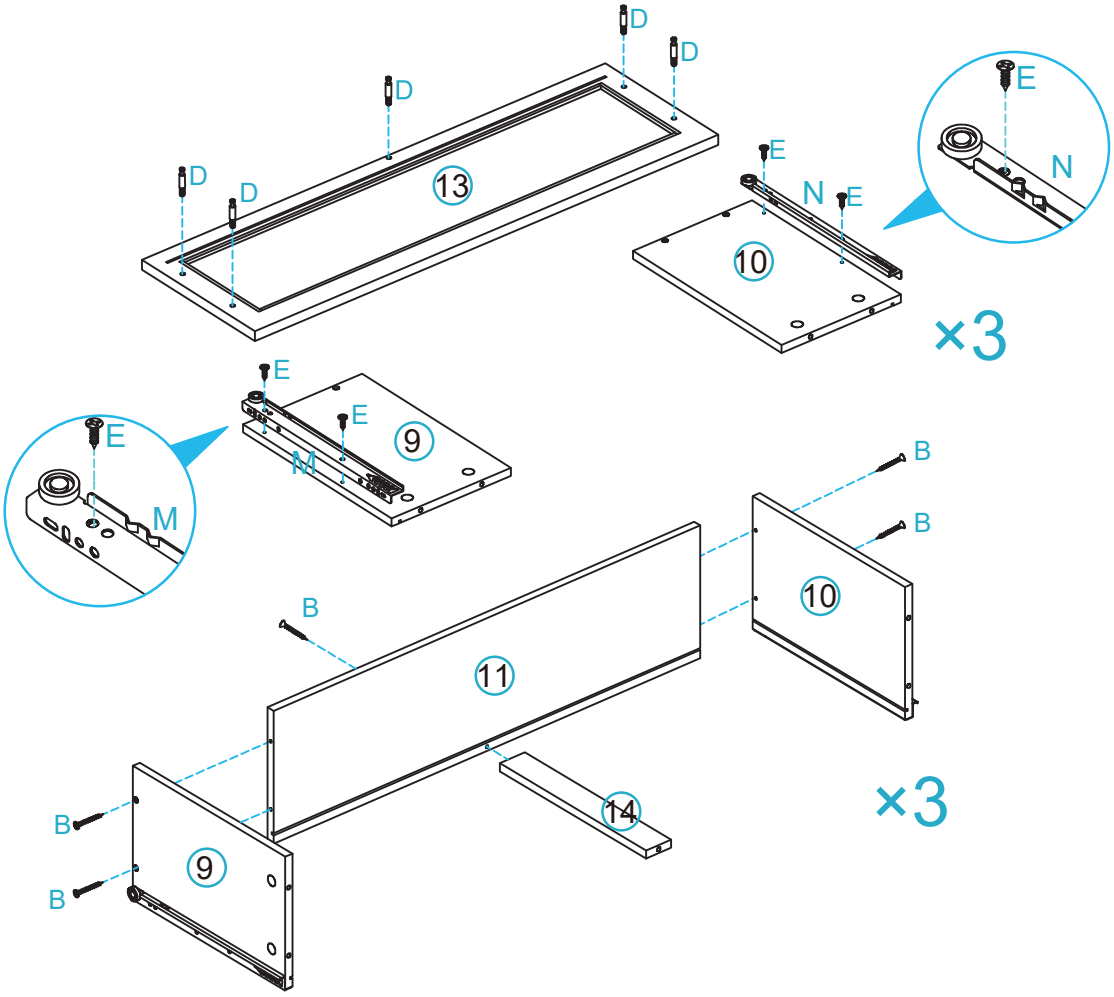

B	×15
D	×15
E	×12
M	×3
N	×3

Step 13.

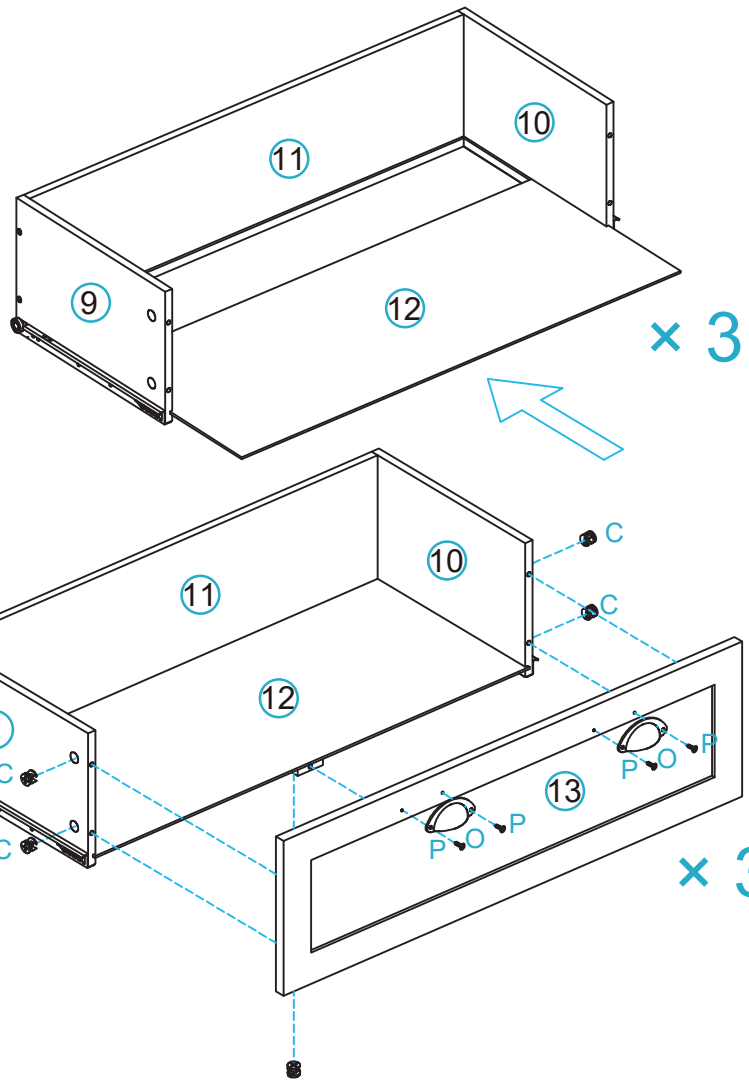

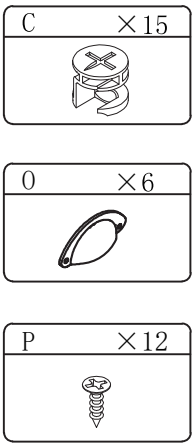

Step 14.

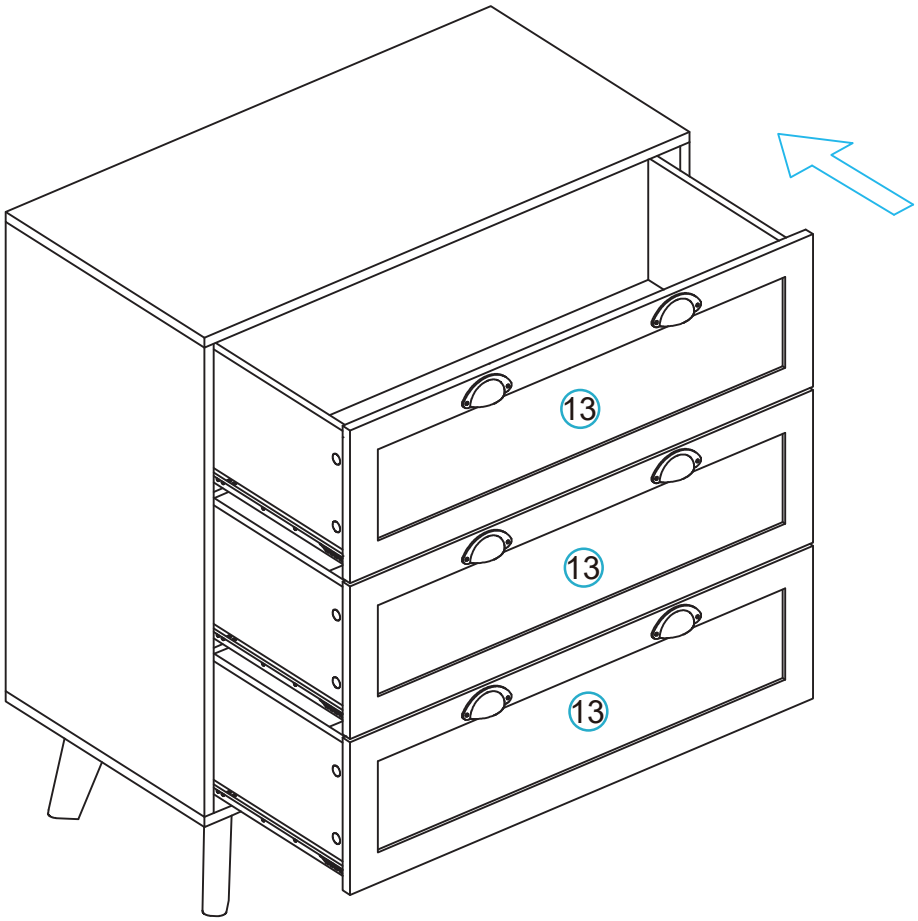

Step 15.

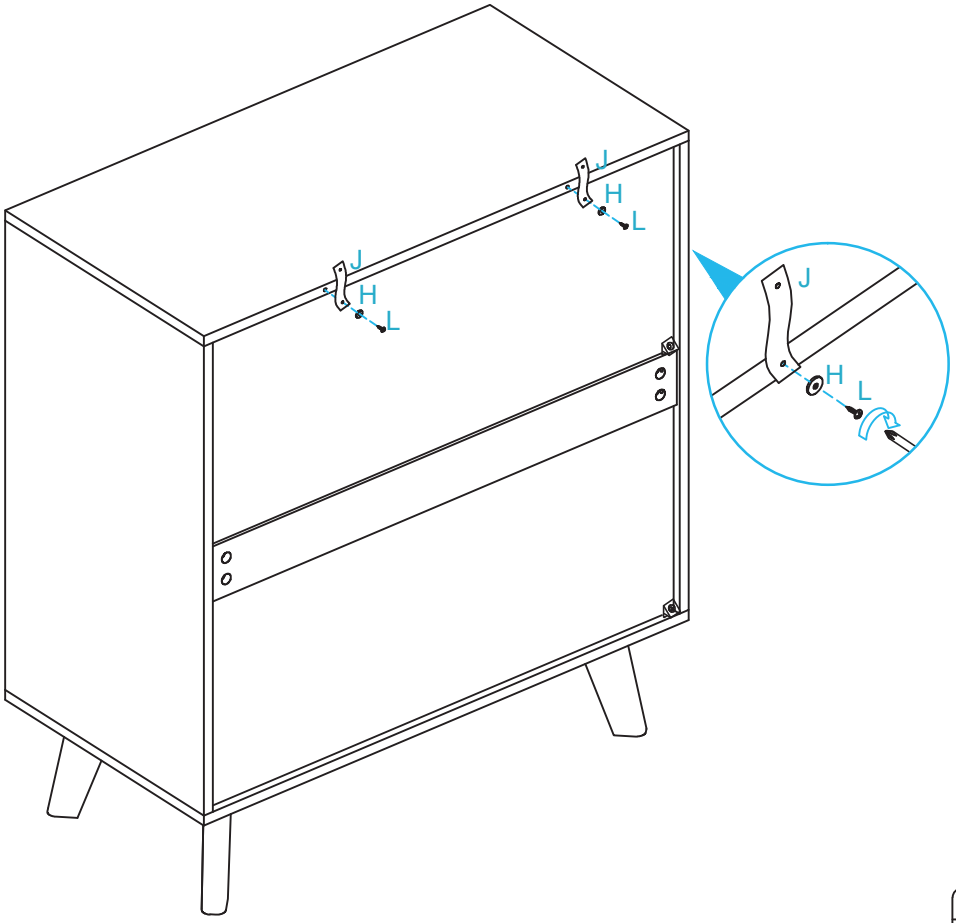

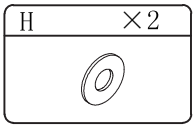

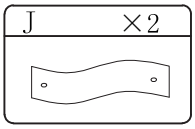

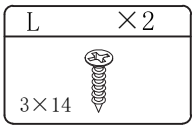

Step 16.

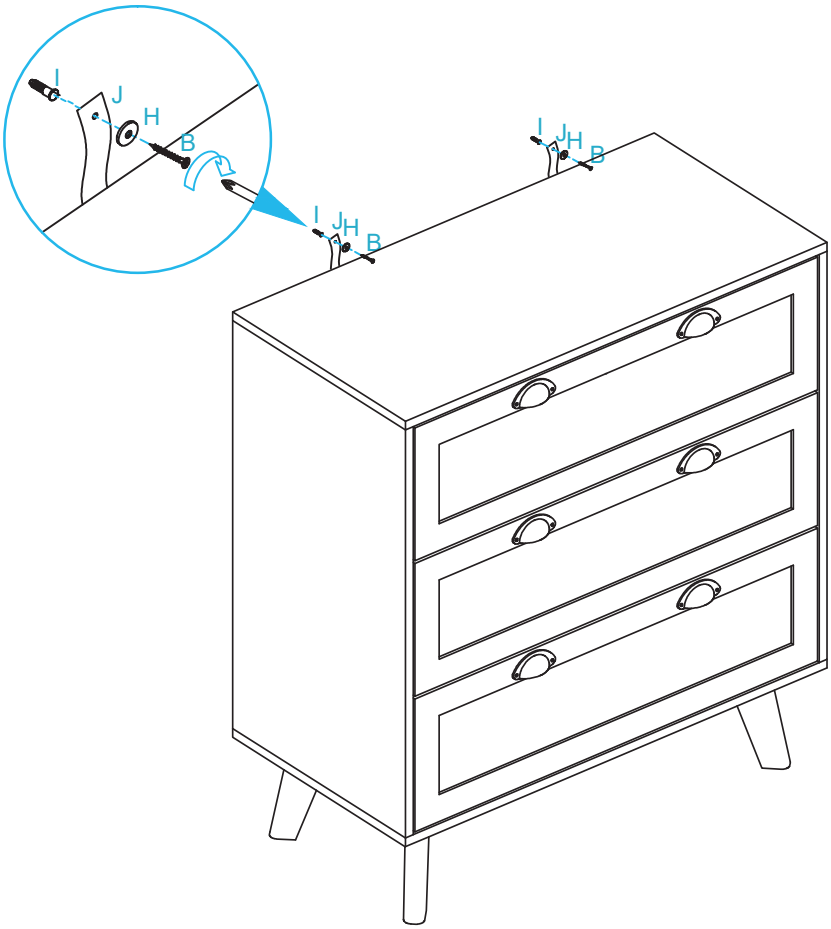

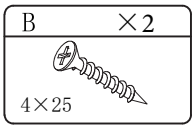

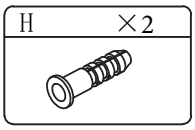

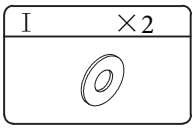

Step 17.

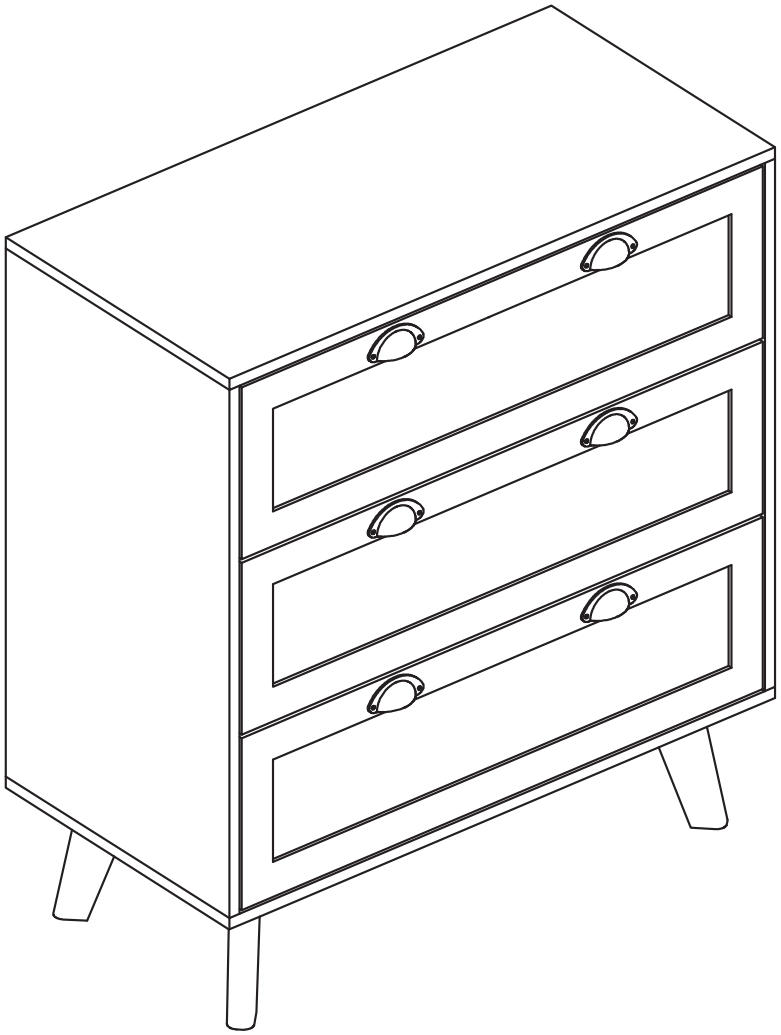

FINISH!

USE & CARE INSTRUCTIONS

KEEPING YOUR FURNITURE BEAUTIFUL

Quality furniture is a significant investment expected to last for years on end. To maintain its beauty & help it last, furniture needs the right care, as no finish is totally indestructible. However, with regular care, the finish will last much longer, providing years of enjoyment to you.

TIPS TO PROTECT & CARE FOR YOUR FURNITURE

1. Avoid placing your furniture in direct sunlight, as sunlight causes fading.
2. Avoid extreme changes in temperature by arranging furniture away from radiators, heat & air vents & air conditioning units.
3. Avoid placing plastic or rubber materials (lamp bases, notebooks, placemats, etc.) on your furniture, as certain plastics contain ingredients that may damage the finish.
4. Periodically rotate accessories on furniture, do not sit in the same place all the time.
5. Use pads, cloth or felt to protect the furniture surface from plastic, rubber, hot dishes beverages, bookends, flowerpots & vases.
6. Clean up spills immediately, using a blotting rather than wiping action, as water left over a long time will cause white spots in the finish. Alcohol, perfume, after-shave & medications can cause severe finish damage.
7. Use a protective pad when writing on the furniture surface.
8. Lift & place objects rather than dragging them across the furniture surface.
9. Avoid placing furniture directly under windows.
10. Use cutting boards and trivets for food preparation in order to avoid damaging the top of the furniture

WOOD FURNITURE CARE

We recommend dusting frequently with a clean, soft, dry, lint-free cloth. Wipe spills immediately with a clean cloth. Clean the surface by rubbing follow the direction of the grain and wipe dry. We recommend polishing your furniture approximately every six months. We do not recommend use aerosol-powered cleaners, polishes that contain silicone, waxes, abrasives, or oil based.

LEATHER FURNITURE CARE

To prevent cracks and surface damage we recommend keeping away from high humidity and low temperature rooms. Do not place close to fire, stoves or heaters. Wipe spills immediately with clean non-abrasive cloth or sponge. For spots or stains, clean with mild detergent and warm water. Wring out excess water make cloth is damp before use. Rinse cloth in clear water and wring out, then wipe again to remove detergent residue. To prevent damage use a dry cloth to wipe excess moisture. Also, do not use chemical cleaners that contain bleach.

GRANITE CARE

Our granite is sealed. We recommend cleaning spills promptly. For daily cleaning, use warm water and a soft clean cloth. Granite cleaners also can used for deep cleaning. We do not recommend using abrasive cleaners, chemical solvents, strong detergents, cleaners with bleach or vinegar. Be sure to use trivets, coasters, placemats, or adhesive felt pads to help prevent scratches.

FAUX WOOD/MARBLE CARE

We recommend dusting frequently with a clean, soft, dry, lint-free cloth. Wipe spills immediately with a clean cloth. We do not recommend use aerosol-powered cleaners, polishes that contain silicone, waxes, abrasives, or oil-based. To avoid damaging the surface of the furniture, always use a cutting board when cutting food or other items on the surface. Do not place hot items directly on the surface; always use pads or trivets to prevent damage.

METAL FURNITURE CARE

Because most metals, except aluminum, are subject to rust, metal furniture is usually finished with layers of clear varnish, paint, or a durable powder coating. To clean, use a mild soap solution, scrub, rinse and dry. For outdoor furniture, make sure to drain any water that may accumulate inside the frames after rinsing. After cleaning, apply a coat of quality liquid or paste wax with a lint-free cloth. Use a silicone spray to lubricate swivels and glides on chairs. If metal outdoor furniture is caught during a sudden rainstorm, please make sure to drain any water that may have accumulated inside the frame and dry completely. **Please always cover the furniture when not use, and store properly during inclement weather and the winter/rainy seasons.** For indoor furniture, do not use abrasives products as this may lead to the accidental removal of antique finishes, also to staining or damage to surrounding areas of fabric.

FABRIC MATERIALS CARE

Prevent stains by removing crumbs, dust, dirt, and debris. To remove dirt and debris, vacuum with a dust-brush attachment. Clean spills immediately! For Linen – If the linen item is removable, place the item in a clean sink or tub with cool water and a mild detergent. Gently agitate the linen items, then remove from the soapy water. Rinse with cool water and hang dry. If not removable, then spot clean by dabbing with solution of cool water and a mild detergent on a soft nonabrasive cloth. For Microfiber - If the microfiber item is removable, use machine-wash them in cold water with mild detergent. No fabric softeners as they will clog the open spaces in the microfiber, making the fabric useless. Avoid washing the cotton items because the microfiber will grab on to the lint. If not removable, then spray the area lightly with a water-based solution; using a soft cloth and a blotting motion to remove the stain. Fully air dry.