LED Bookcase

Assembly Instruction – Please keep properly for future reference.

If you find any missing boxes, damaged parts, or accessory shortages, please contact the customer service team of your purchasing channel immediately. We will resolve the issue as quickly as possible.

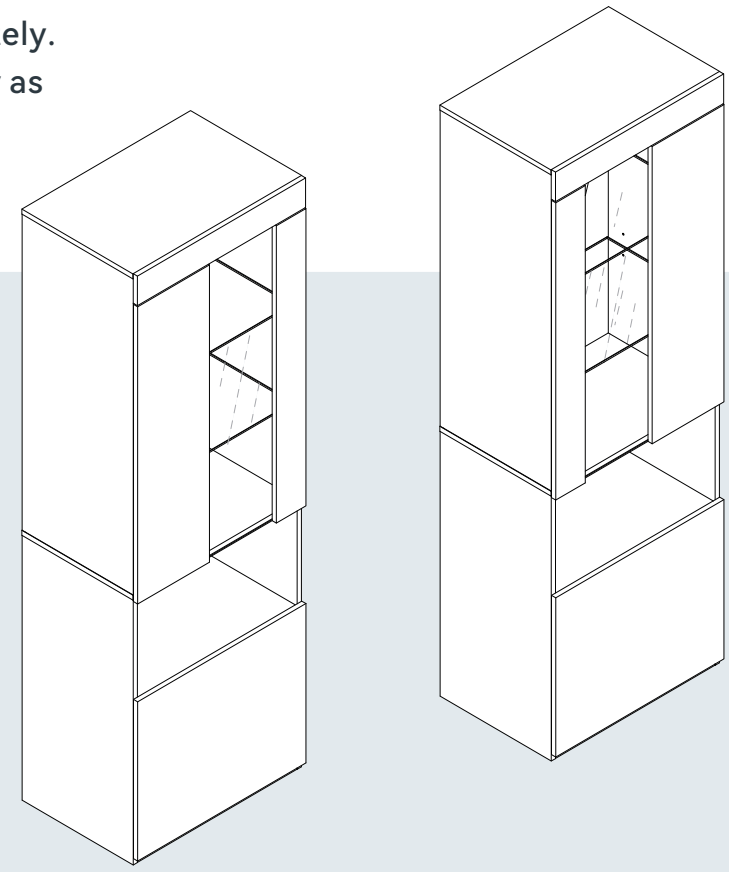

CONTACT US

- **Email: service@grandtunnel.com**
  In order to receive assistance more quickly, please provide

THE FOLLOWING INFORMATION:

- Order number
- Purchase platform
- Purchase date
- Detailed description of the issue along with photos (if applicable)

Important – Please read these instructions carefully before starting the installation.

EN

EN

Before Assembly

Thank you for choosing our product!
To ensure a smooth installation process, please read this guide carefully to familiarize yourself with the required tools, materials, and installation steps.
Follow the relevant sections to avoid any damage caused by improper installation, and make sure to review all operation and safety guidelines for correct installation procedures.

Packaging Notice:

1. Multi-Box Shipping Notice

This product is packaged in 2 separate boxes for shipping and may arrive in batches at different times. To ensure a smooth assembly process, please make sure all boxes are received before unpacking and starting the installation.

2. Box and Packaging Verification

Each box is labeled with a corresponding number. Please refer to the packing list on the next page of this manual to verify that all boxes have been received.

If you find any missing boxes, damaged parts, or accessory shortages, please contact the customer service team of your purchasing channel immediately. We will resolve the issue as quickly as possible.

Safety and Care Advice

Important :
Please read these instructions fully before starting assembly.

- Check you have all the components and tools listed on the following pages.
- Remove all fittings from the plastic bags and separate them into their groups.
- Keep children and animals away from the work area, small parts could choke if swallowed.
- Make sure you have enough space to layout the parts before starting.
- During assembly do not stand or put weight on the product, this could cause damage.

Email : **service@grandtunnel.com**

- Assemble the item as close to its final position (in the same room) as possible.
- Assemble on a soft level surface to avoid damaging the unit or your floor.
- Parts of the assembly will be easier with 2 people.



- To reduce the likelihood of damaging your product please ensure that your power drill is set on a low torque setting.

Care and Maintenance

- Only clean using a damp cloth and mild detergent, do not use bleach or abrasive cleaners.
- From time to time check that there are no loose screws on this unit.
- This product should not be discarded with household waste. Take to your local authority waste disposal center.

Handy Hints

- Assemble all parts and bolts loosely during assembly, only once the product is complete should you fully tighten the bolts.
- Regularly check and ensure that all bolts and fittings are tightened properly.

Warning

In order to help prevent overturning, please follow these instructions.

- Use the anti tip strap or wall fixing method provided (if applicable).
- Do not allow children to climb or hang on the furniture.
- Do not open more than one drawer at a time.
- Do not place heavy items in the top drawers.
- Do not place heavy items on top of the furniture, unless the furniture has been designed for this purpose.
- Please note that only the anti tip strap is provided. You will need to provide wall plugs and screws applicable for your wall type.

EN

Customer Service Guide

Thank you for choosing our product! We are committed to providing you with excellent service. If you find any missing parts, damaged packaging, or product damage after receiving all packages, please follow the steps below to quickly contact our customer service team. We will do our best to resolve your issue.

1. Missing Parts

Verify Parts:

1. Refer to the “Parts List” in the manual to verify the name, specifications, and quantity of the missing parts.
2. Take a clear photo of the parts list and mark the missing parts with detailed information, e.g., “Missing 5 pieces of M6×30mm screws.”

Contact Us:

By Email:

Send an email to **service@grandtunnel.com**, with the subject line “Missing Parts Issue.” Include the following in the email:

- A description of the missing parts and a photo of the parts list.
- Order details (order number, purchase platform, purchase date).

2. Product or Packaging Damage

If it affects normal use:

Steps:

1. Take clear photos or videos showing the damaged parts and the extent of the damage (multi-angle shots are recommended).
2. Email the photos/videos along with order details to **service@grandtunnel.com**, with the subject line “Product Damage Issue.”

Resolution:

After verification, we will arrange for a replacement part, product exchange, or refund as quickly as possible.

If it does not affect normal use:

Steps:

1. Contact our customer service team (by email: **service@grandtunnel.com**).
2. Provide a description of the damage and include relevant photos or videos.

Resolution:

We will provide repair guidance or an appropriate compensation plan based on the specific situation.

Contact Us:

Customer Service Email: **service@grandtunnel.com**

Helpful Tips

To process your issue efficiently, please prepare the following information:

- Order details (order number, purchase platform, purchase date).
- Clear photos or videos.
- We are committed to providing quick and professional solutions, no matter the size of the issue, to ensure your satisfaction.

Thank you for your trust and support!
We hope you enjoy using our product!

EN

Parts List - Panels

Please check you have all the panels listed below.

BOX 1:

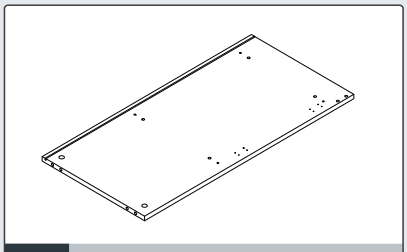

1 807*395*15mm **x2**

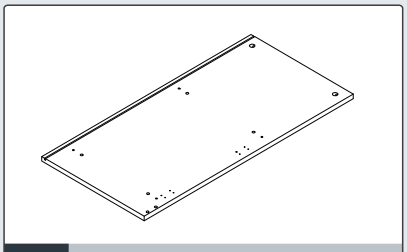

2 807*395*15mm **x2**

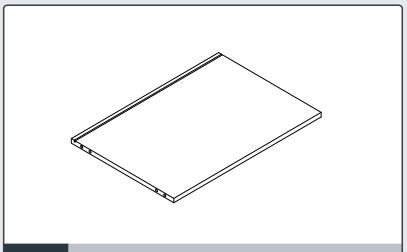

3 568*395*15mm **x2**

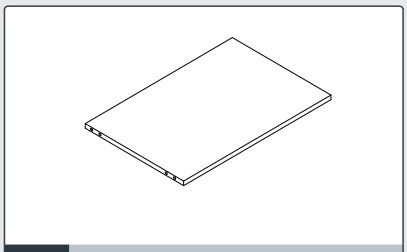

5 568*380*15mm **x2**

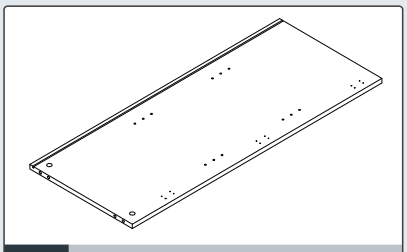

9 965*395*15mm **x2**

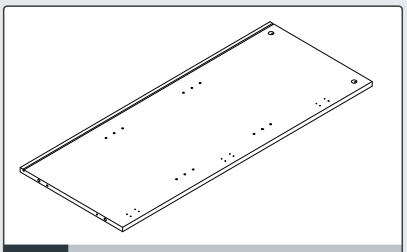

10 965*395*15mm **x2**

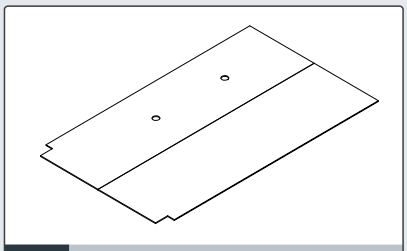

11 973*578*2.5mm **x2**

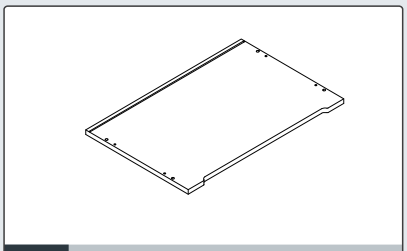

12 600*395*15mm **x2**

Email : **service@grandtunnel.com**

Parts List - Panels

EN

Please check you have all the panels listed below.

BOX 2:

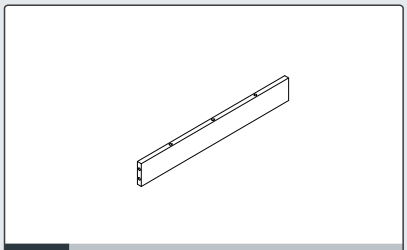

4 562*75*15mm **x2**

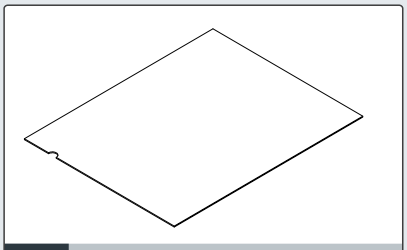

6 729*578*2.5mm **x2**

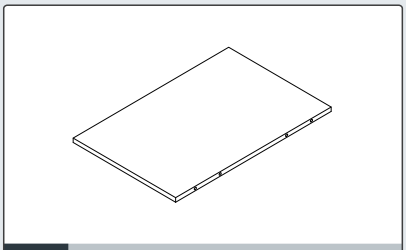

7 600*394*15mm **x2**

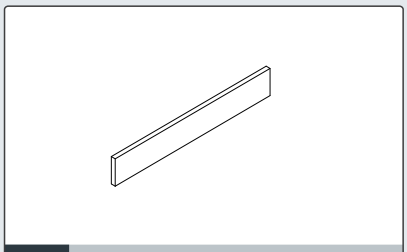

8 568*90*15mm **x2**

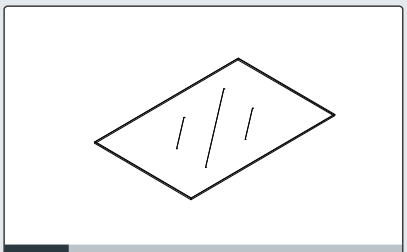

13 558*350*6mm **x4**

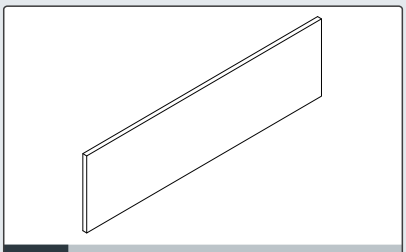

14 905*255*15mm **x2**

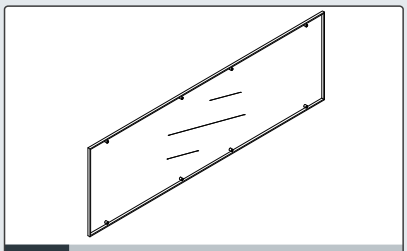

15 905*290*5mm **x2**

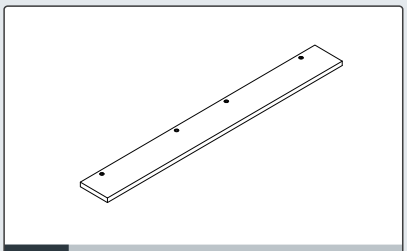

16 905*105*15mm **x2**

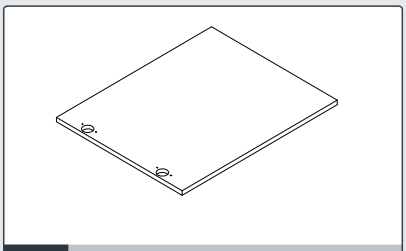

17 598*485*15mm **x2**

EN

Parts List - Fittings

Please check you have all the fittings listed below.

Note: The quantities below are the correct amount to complete the assembly.
In some cases more fittings may be supplied than required.

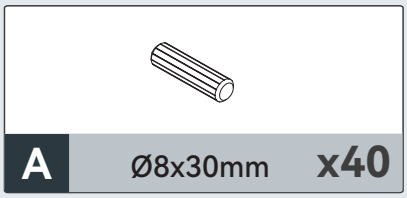

A Ø8x30mm **x40**



B Ø7x39mm **x38**



C Ø15x12mm **x38**



D Wall Fixing Pack **x4**



E Ø5x40mm **x8**



F Protective foot **x8**



G Ø3x18mmBack panel Stiffener **x20**



H Glass Shelf Clamp **x16**

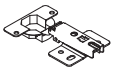

I Hinge **x10**



J Ø3.5x14mm **x60**



K Door Dumper **x10**



L LED Mounting Bracket **x4**



M LED Strip Connector Kit **x1**



M1 Clip Lamp Kit **x1**

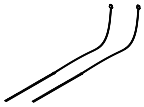

M2 LED Strip Kit **x1**

Tools required

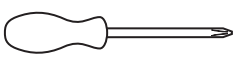

Phillips screwdriver
(medium & large)

Ruler

Use this ruler to help correctly identify the screws

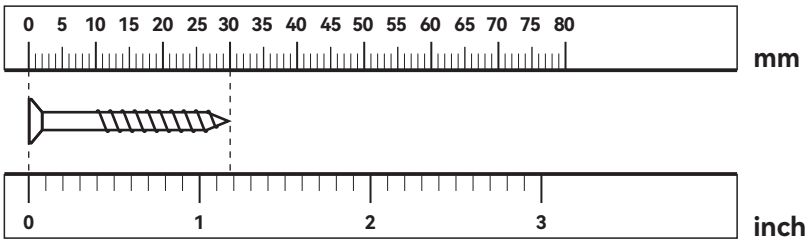

The screws length is measured from the head to the point (30mm screw shown).

Email : **service@grandtunnel.com**

Parts List - Fittings

EN

Please check you have all the fittings listed below.

Note: The quantities below are the correct amount to complete the assembly.
In some cases more fittings may be supplied than required.

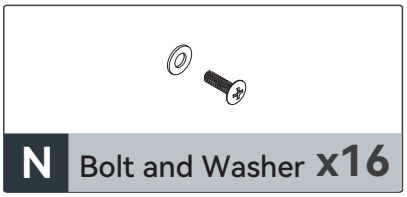

N Bolt and Washer **x16**

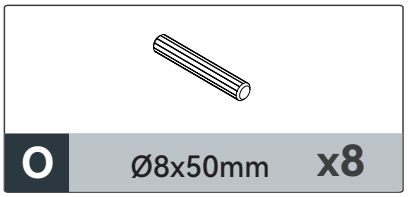

O Ø8x50mm **x8**

Tools required

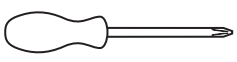

Phillips screwdriver
(medium & large)

Ruler

Use this ruler to help correctly identify the screws

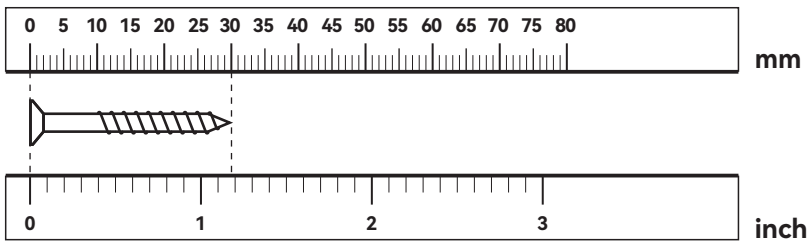

The screws length is measured from the head to the point (30mm screw shown).

EN

Using Camlocks

Step 1

Connect the male camlock as directed in the assembly instructions using a screwdriver.

DO NOT OVER TIGHTEN.

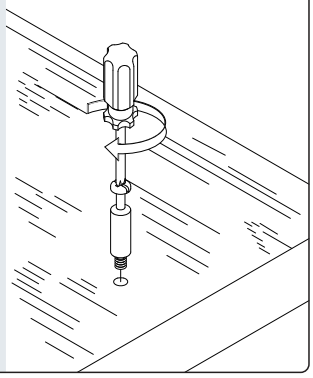

Step 2

Push the male camlock into the entry hole.

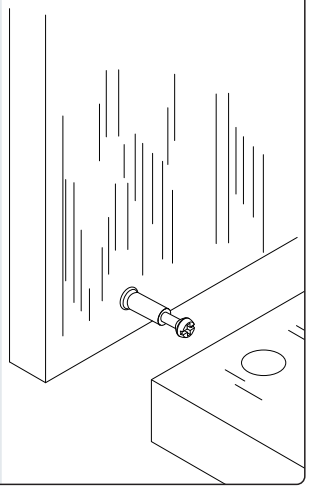

Step 3

Insert the female camlock as shown in the instructions.

Note: ensure that the arrow on the top of the camlock points towards the entry hole for the male camlock.

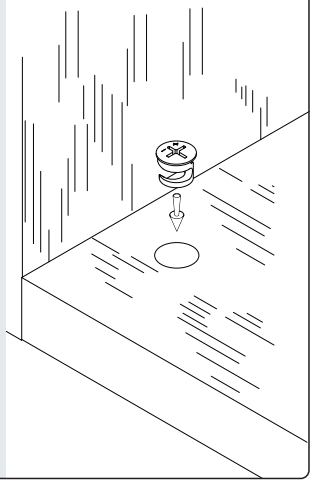

Step 4

Turn the female camlock clockwise with a screwdriver.

You should feel a click when the camlock is locked in place.

The joint is now secure.

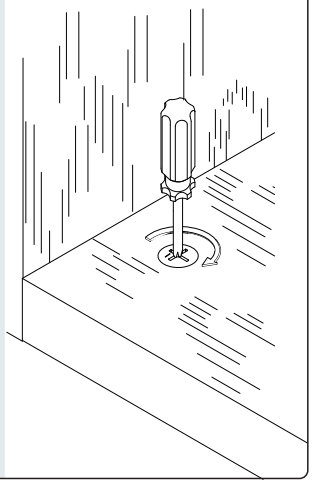

Email : **service@grandtunnel.com**

Assembly Instructions

EN

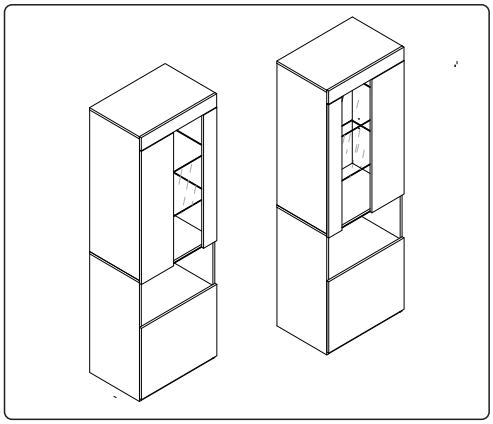

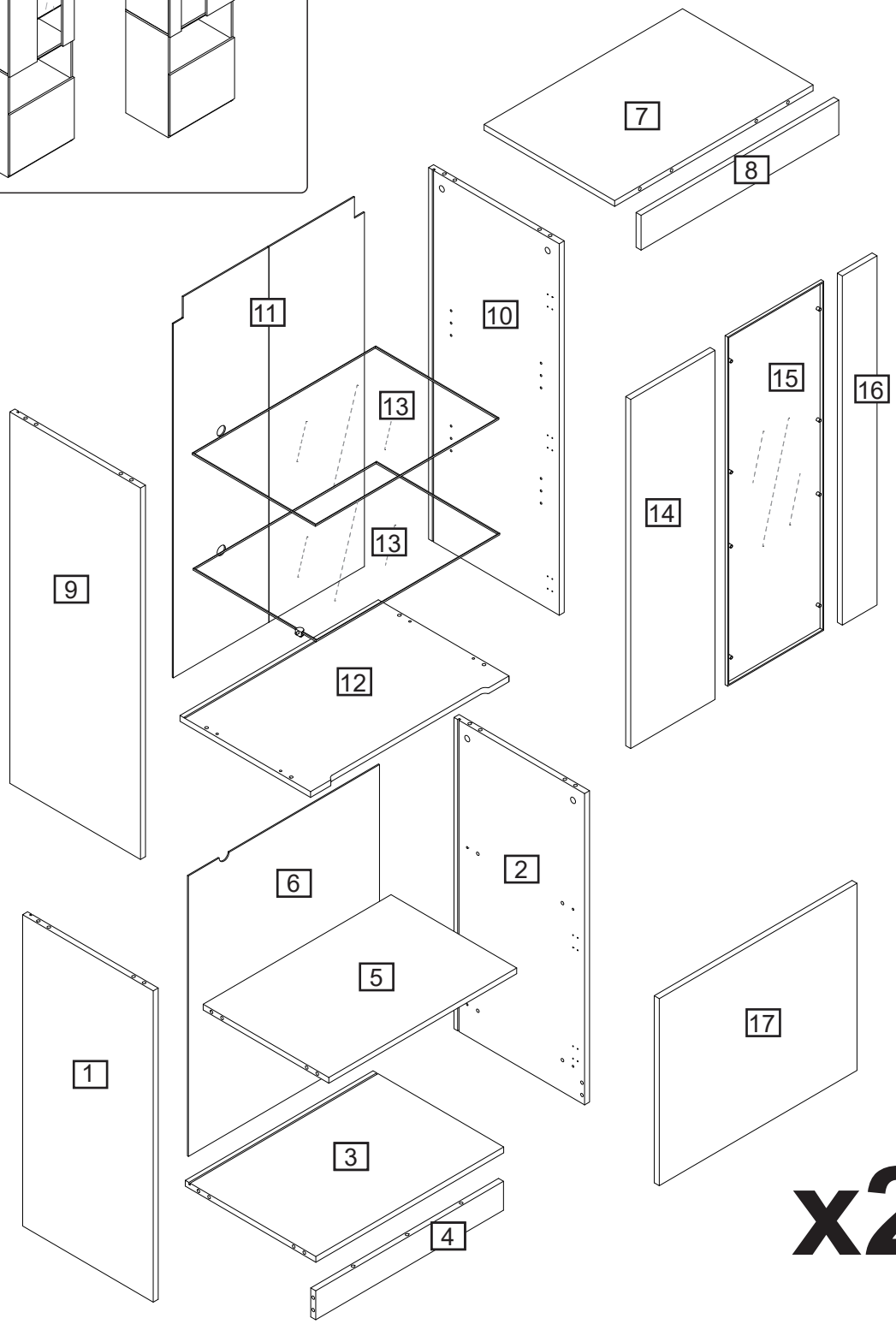

x2

Step 1

A

Ø8x30mm x20

B

Ø7x39mm x2

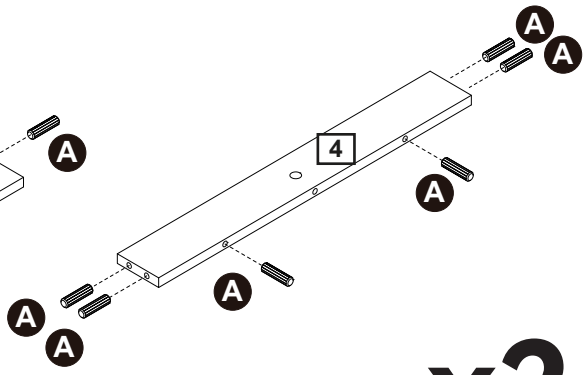

x2

CAM-LOCK
Tighten until shoulder is flush with panel. Do not overtighten or undertighten (see example)

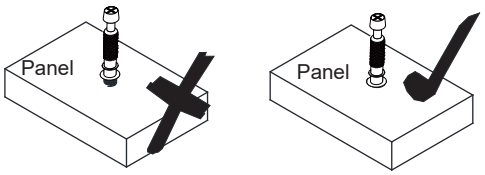

Insert wooden dowel (A) to part (3,4).
Attach cam bolt (B) to part (3).

Step 2

C

Ø15x12mm x2

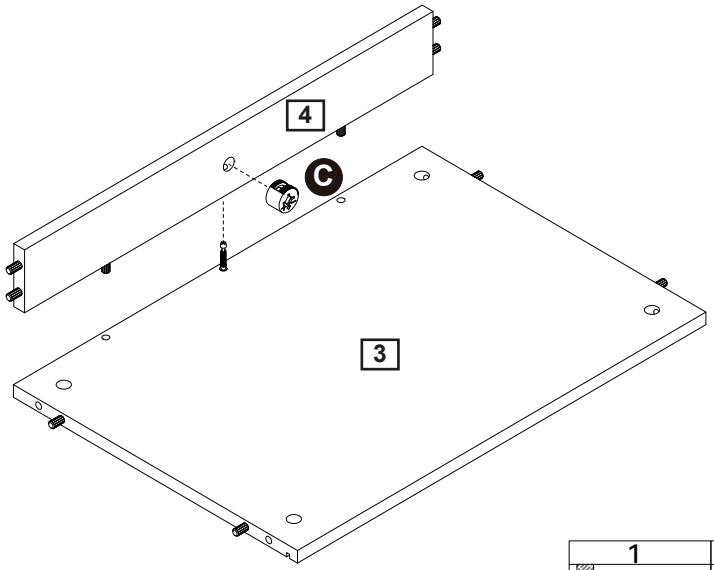

x2

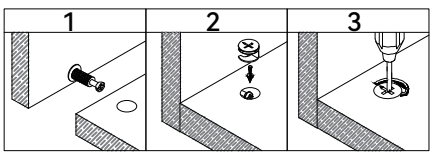

Attach part (4) to part (3), then insert and secure cam lock (C) to part (4) to lock it.

Email : **service@grandtunnel.com**

Step 3

B

Ø7x39mm x16

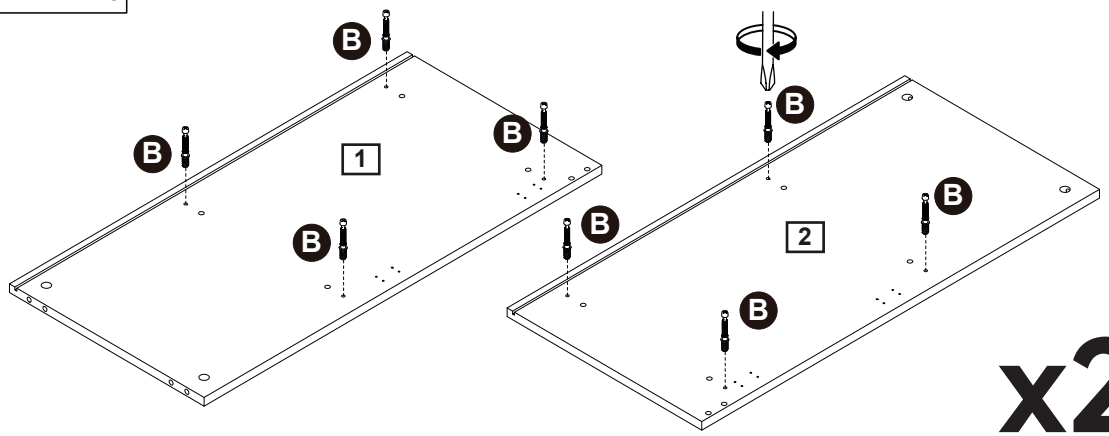

CAM-LOCK
Tighten until shoulder is flush with panel. Do not overtighten or undertighten (see example)

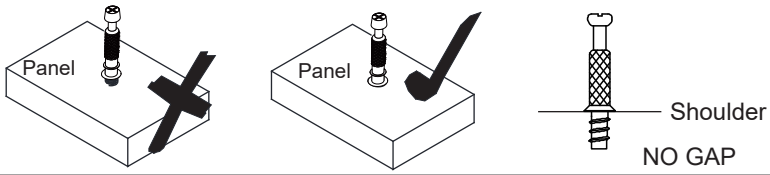

Attach cam bolt (B) to part (1, 2).

Step 4

A

Ø8x30mm x8

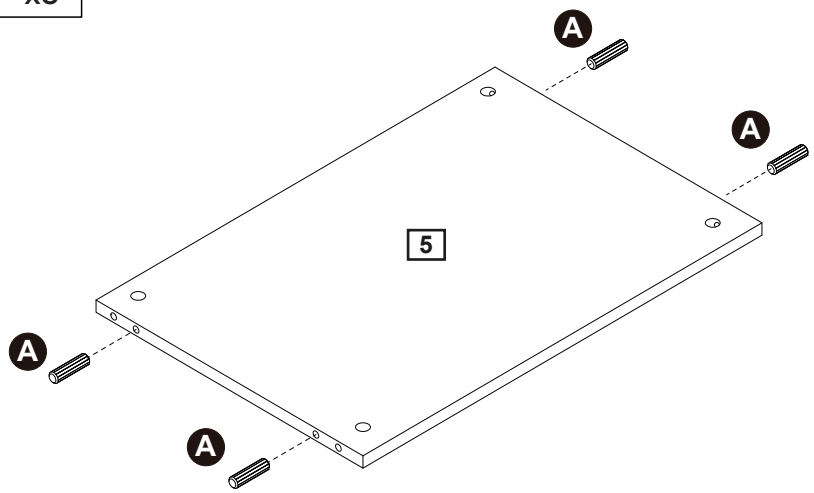

Insert wooden dowel (A) to part (5).

Step 5

C

Ø15x12mm x8

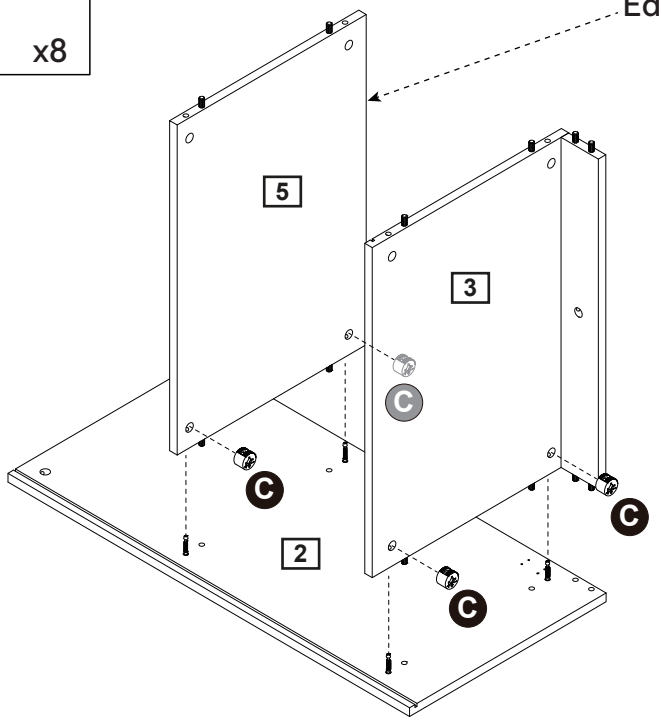

x2

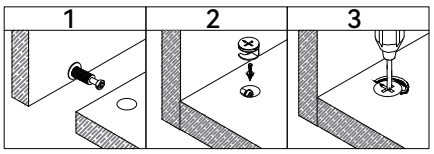

Attach part (3, 5) to part (2), then insert and secure cam lock (C) to part (3, 5) to lock it.

Step 6

C

Ø15x12mm x8

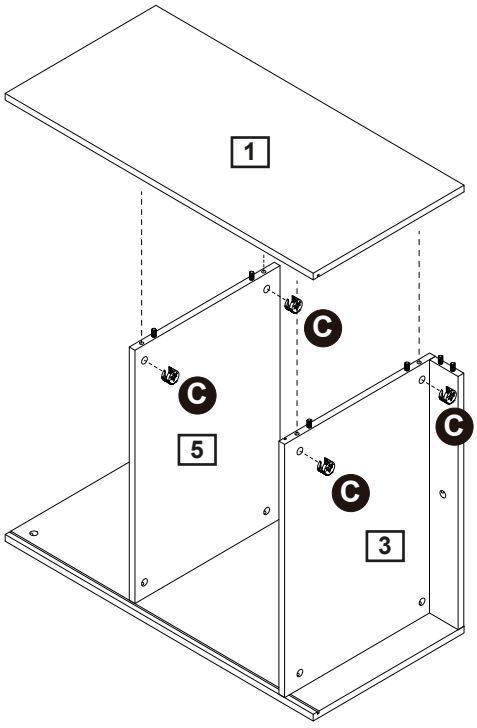

x2

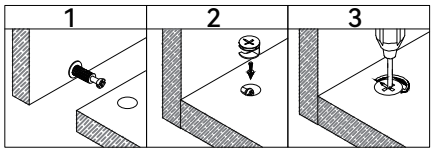

Attach part (1) to part (3, 5), then insert and secure cam lock (C) to part (3, 5) to lock it.

Email : **service@grandtunnel.com**

Step 7

F Protective foot x8

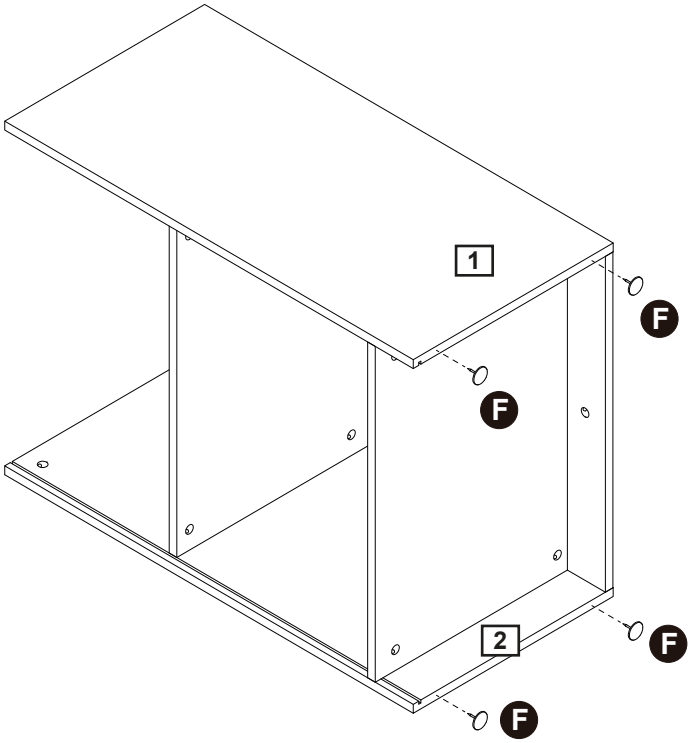

x2

Insert protective foot (F) to part (1, 2).

Step 8

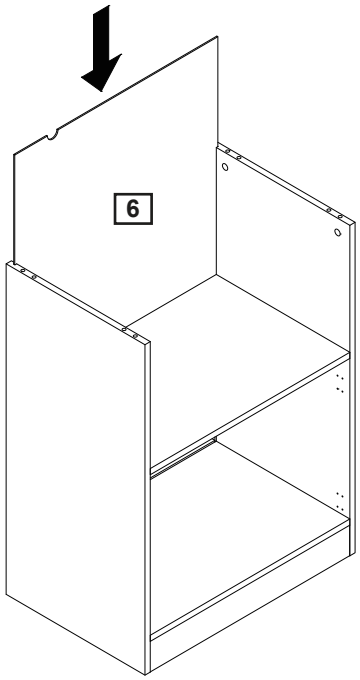

x2

Slide back panel (6) into grooves.

Step 9

A
Ø8x30mm x12

B
Ø7x39mm x8

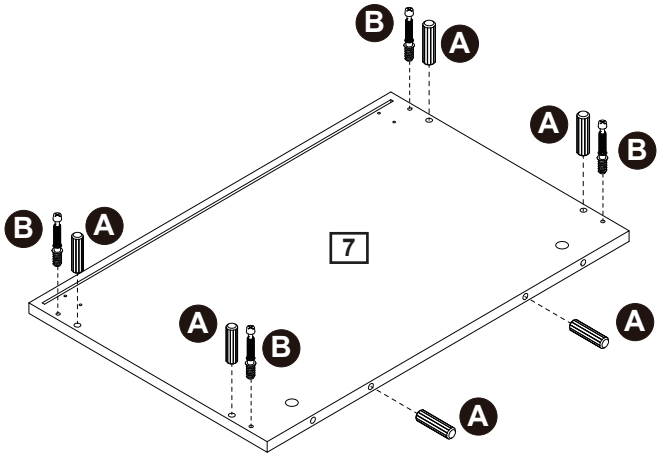

x2

CAM-LOCK
Tighten until shoulder is flush with panel. Do not overtighten or undertighten (see example)

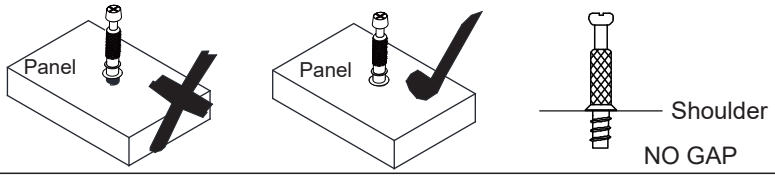

Insert wooden dowel (A) to part (7).
Attach cam bolt (B) to part (7).

Step 10

D
Wall Fixing Pack x4

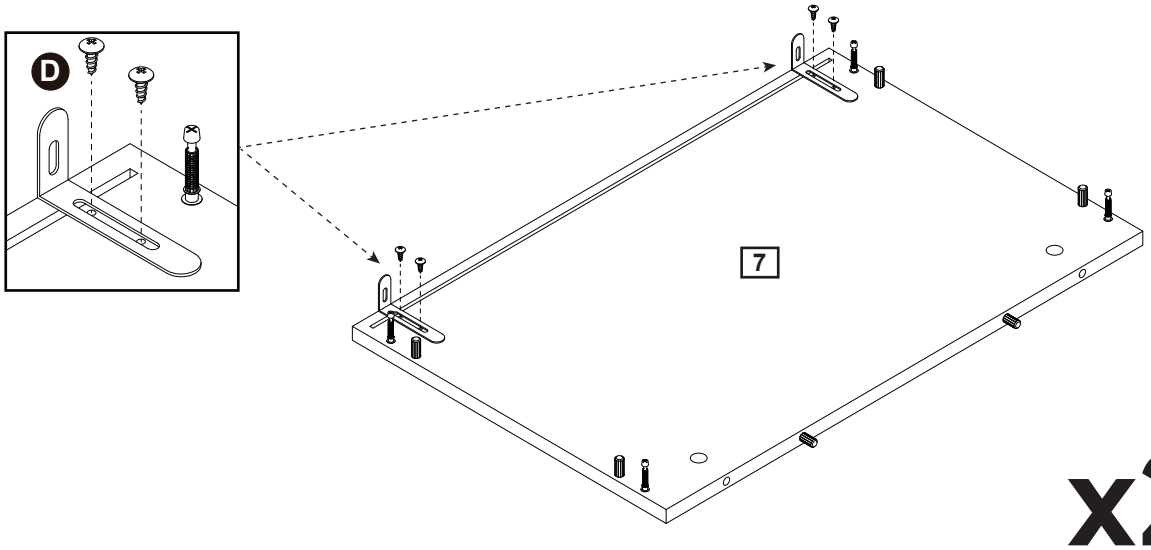

x2

Attach wall bracket (D) to part (7) using screw (D).

Email : **service@grandtunnel.com**

Step 11

C



Ø15x12mm x8

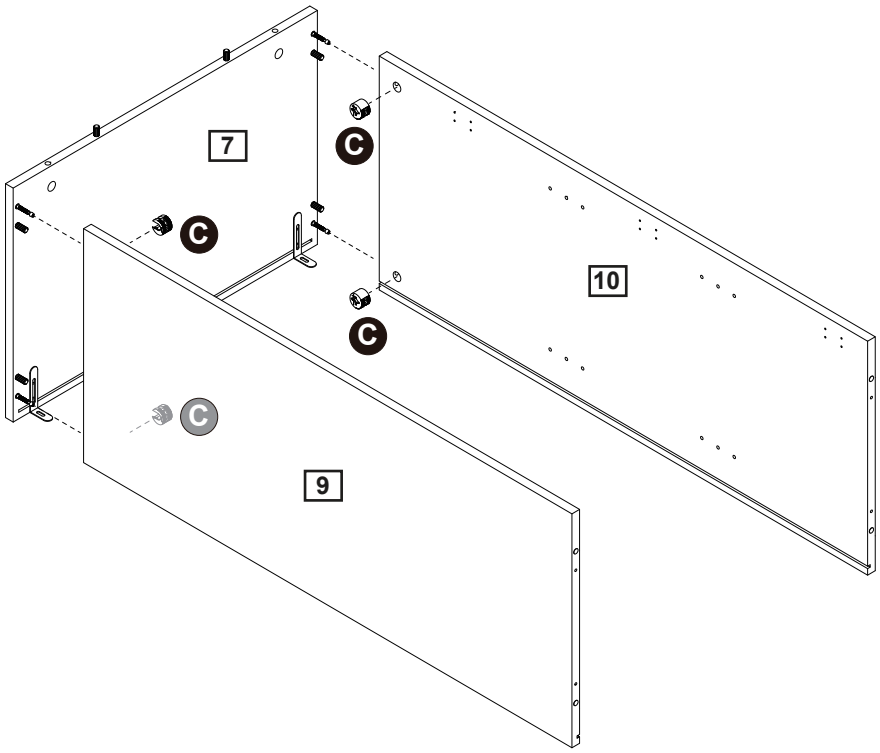

x2

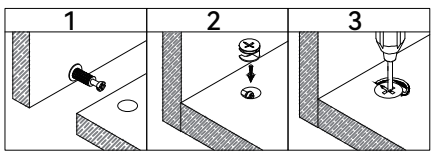

Attach part (7) to part (9, 10), then insert and secure cam lock (C) to part (9, 10) to lock it.

Step 12

B



Ø7x39mm x4

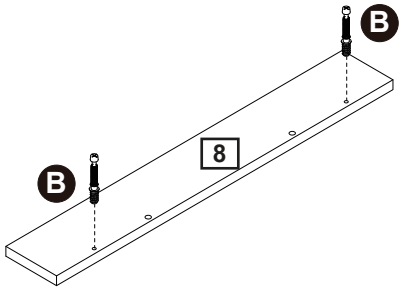

x2

CAM-LOCK
Tighten until shoulder is flush with panel. Do not overtighten or undertighten (see example)

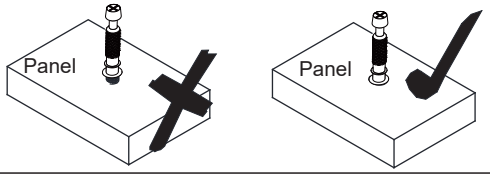

Attach cam bolt (B) to part (8).

Step 13

C



Ø15x12mm x4

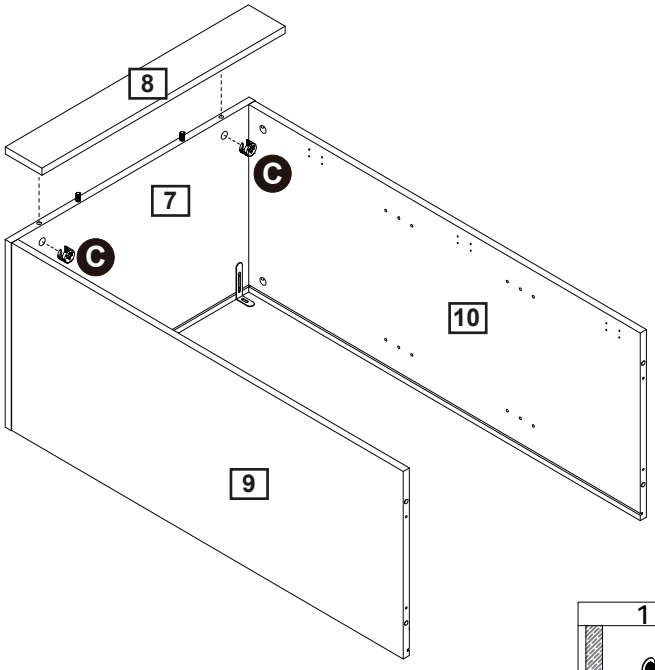

x2

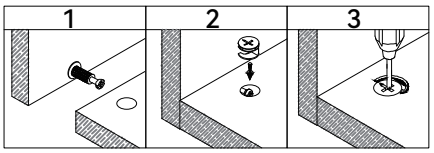

Attach part (8) to part (7), then insert and secure cam lock (C) to part (7) to lock it.

Email : **service@grandtunnel.com**

Step 14

O

Ø8x50mm x8

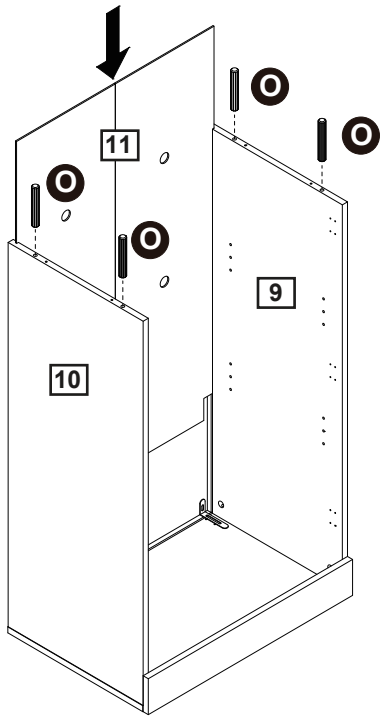

x2

Slide back panel (11) into grooves.
Insert wooden dowel (O) to part (9, 10).

Step 15

B

Ø7x39mm x8

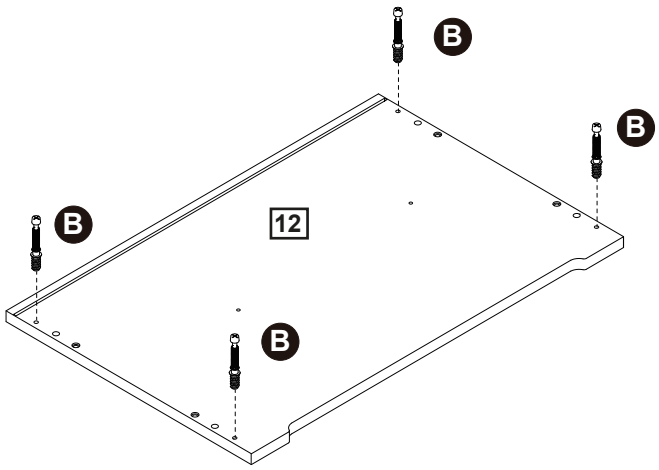

x2

CAM-LOCK
Tighten until shoulder is flush with panel. Do not overtighten or undertighten (see example)

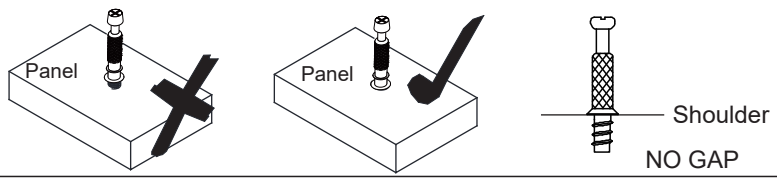

Attach cam bolt (B) to part (12).

Step 16

E
Ø5x40mm x8

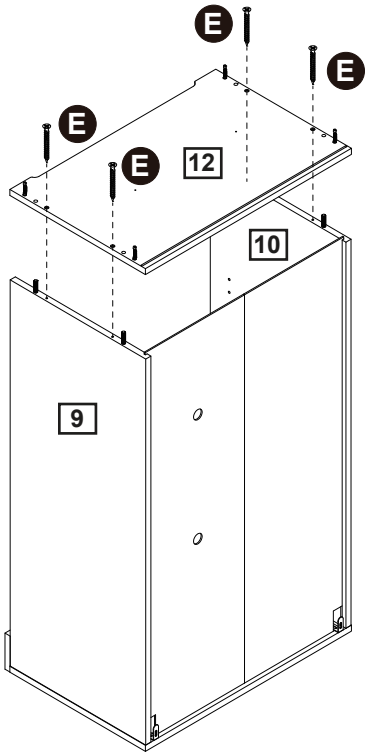

x2

Attach part (12) to part (9， 10) using screw (E).

Step 17

L
LED Mounting Bracket x4

M2
LED Strip Kit x1

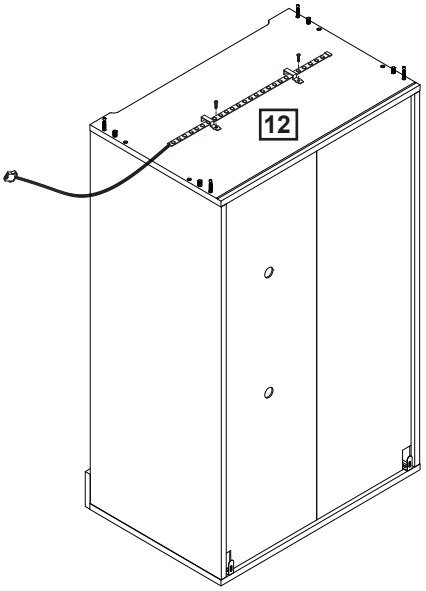

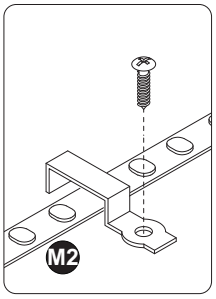

x2

Attach LED strip light (M2) to part (12) using LED mounting bracket (L).

Email : **service@grandtunnel.com**

Step 18

C



Ø15x12mm x8

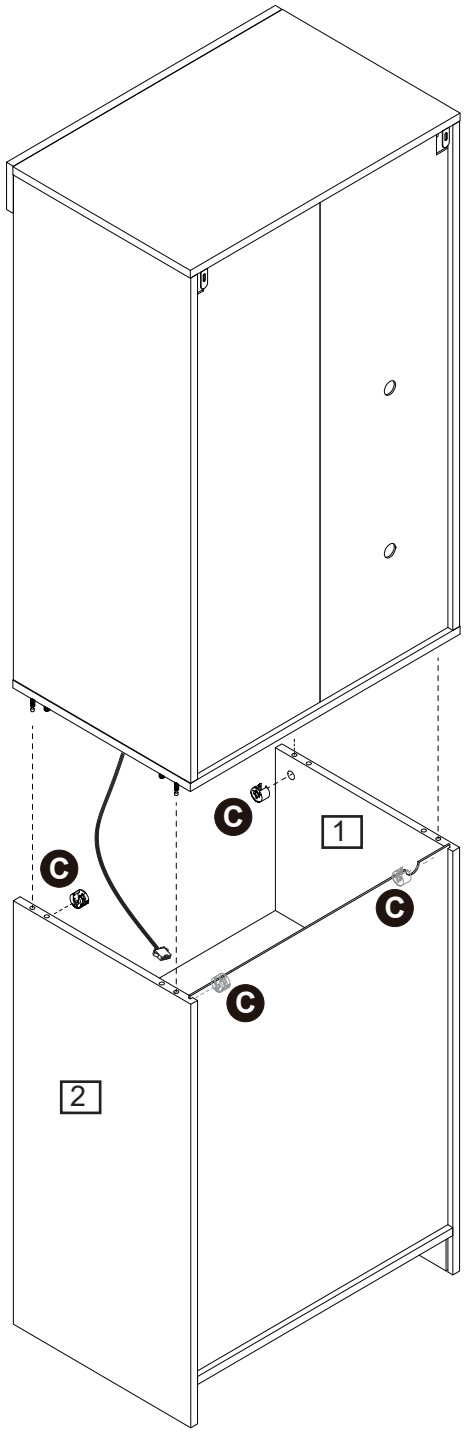

x2

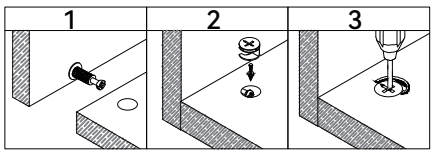

Attach part (12) to part (1, 2), then insert and secure cam lock (C) to part (1, 2) to lock it.

EN

Step 19

G Ø3x18mm Back panel Stiffener x20

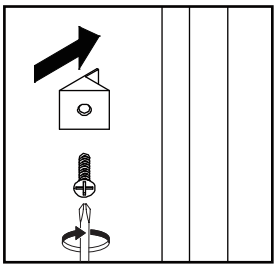

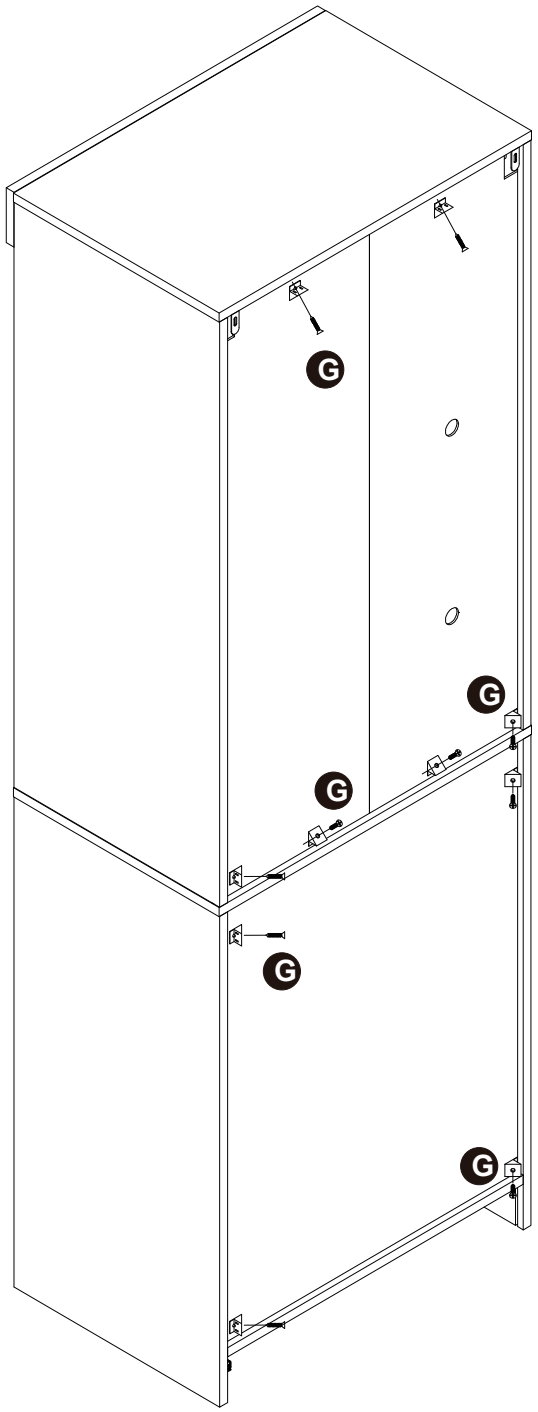

x2

Attach plastic wedge (G) to back panel using screw (G) with a screwdriver.

Email : **service@grandtunnel.com**

Step 20

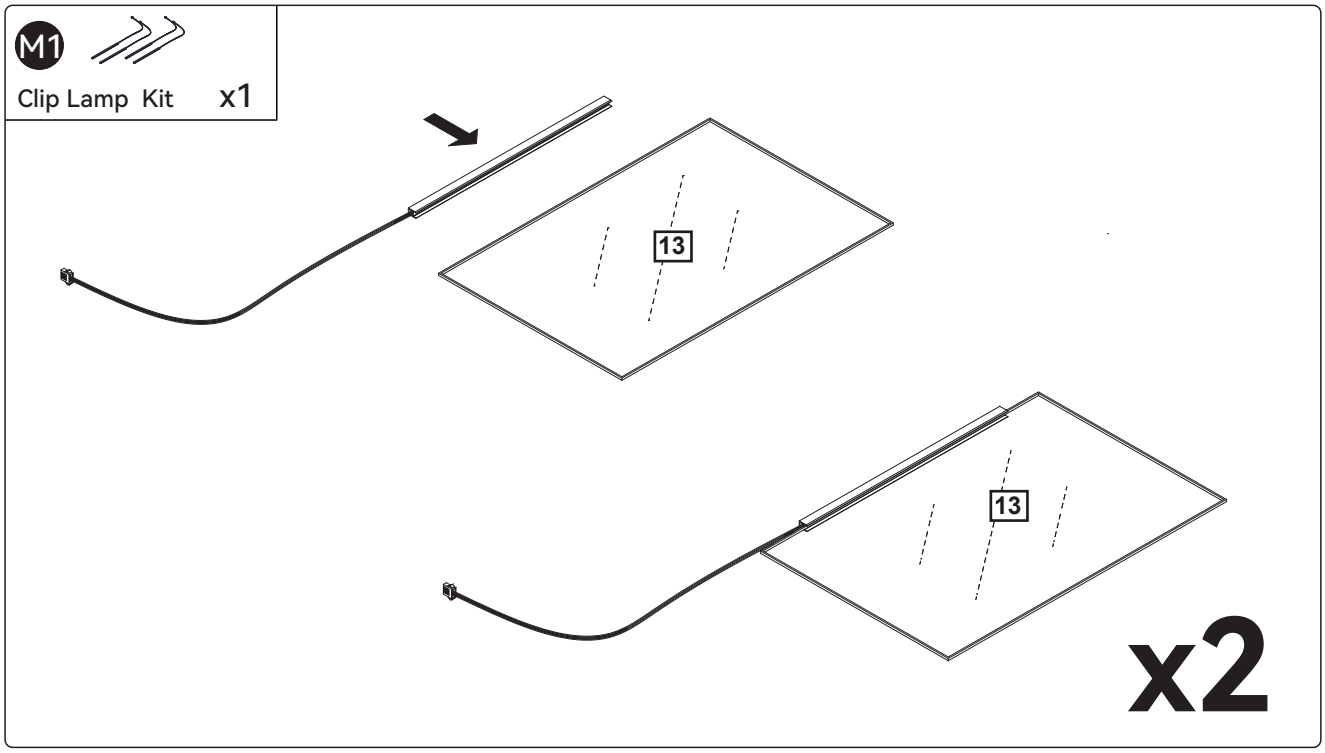

Attach clip lamp (M1) to part (13).

Step 21

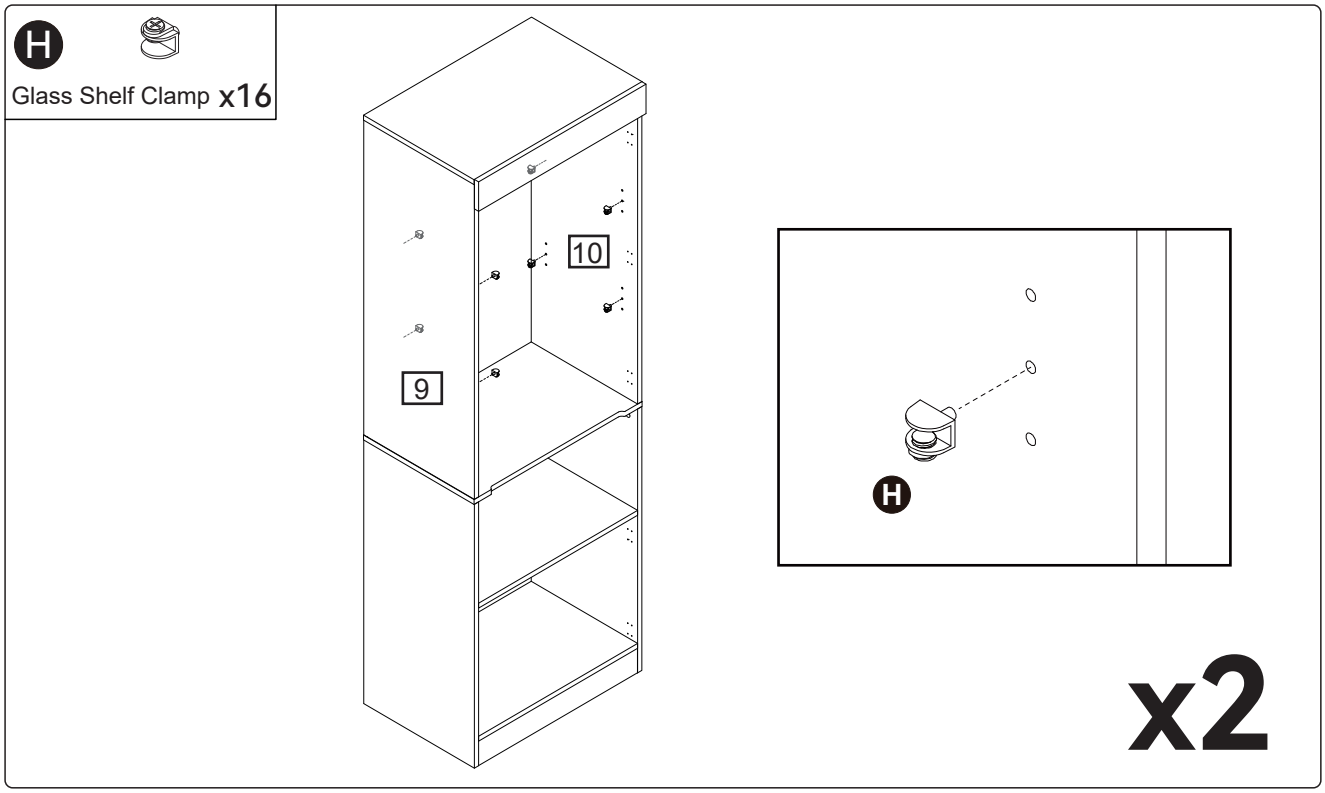

Attach glass shelf clamp (H) to part (9,10).

Step 22

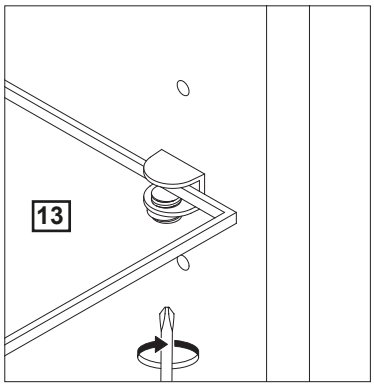

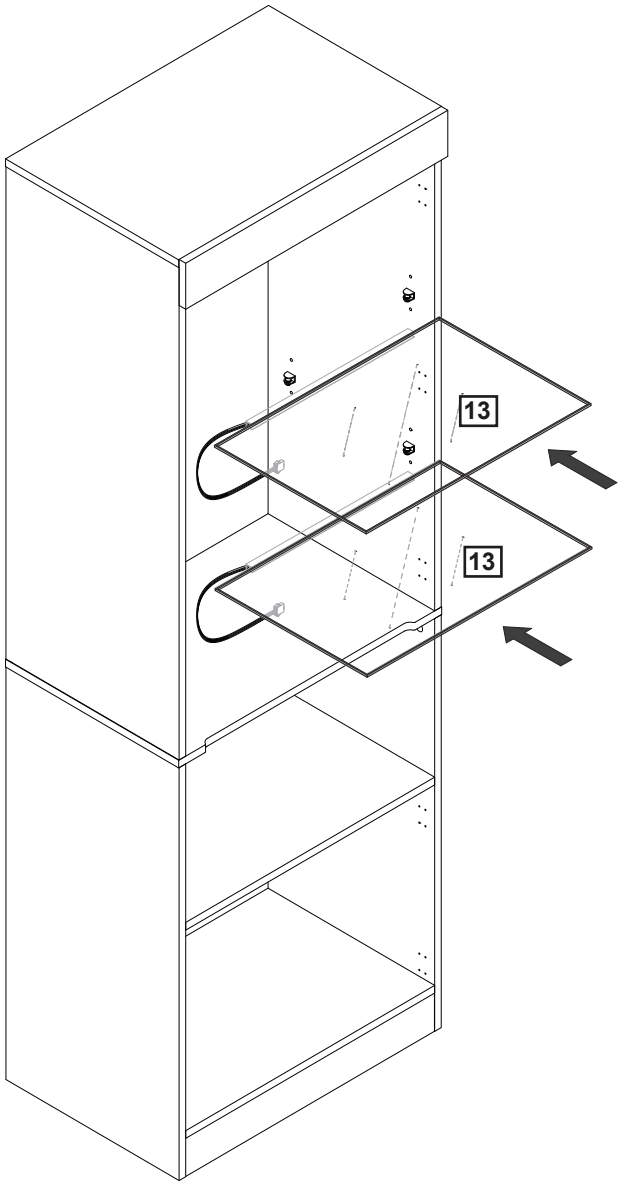

x2

Slide part (13) through glass shelf clamp (H), and tighten the clamp.

Email : **service@grandtunnel.com**

Step 23

N x16

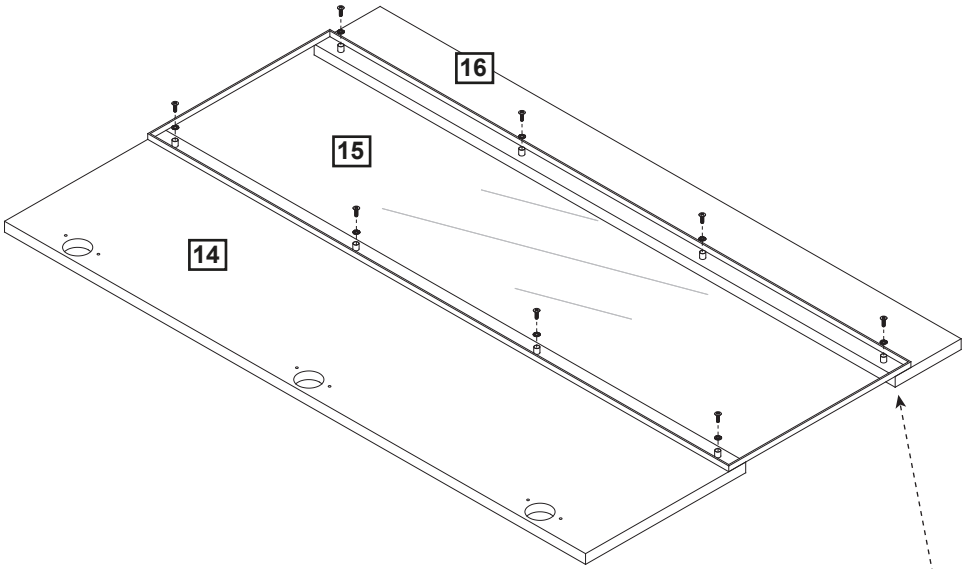

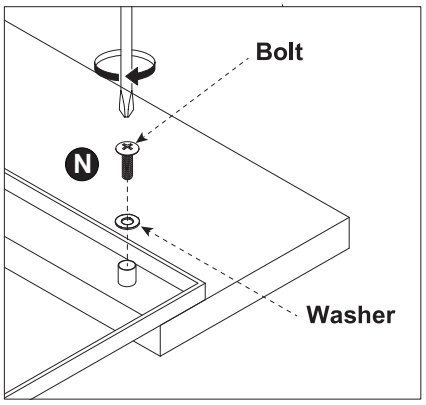

Note: First, insert all bolts and tighten them only partially (do not fully tighten at this stage). Once all bolts are in place and the parts are properly aligned, then fully tighten all screws.

x2

Attach galss (15) to panels (14,16) using bolts and rubber washers with a screwdriver.

Step 24

I Hinge	x10
J Ø3.5x14mm	x20

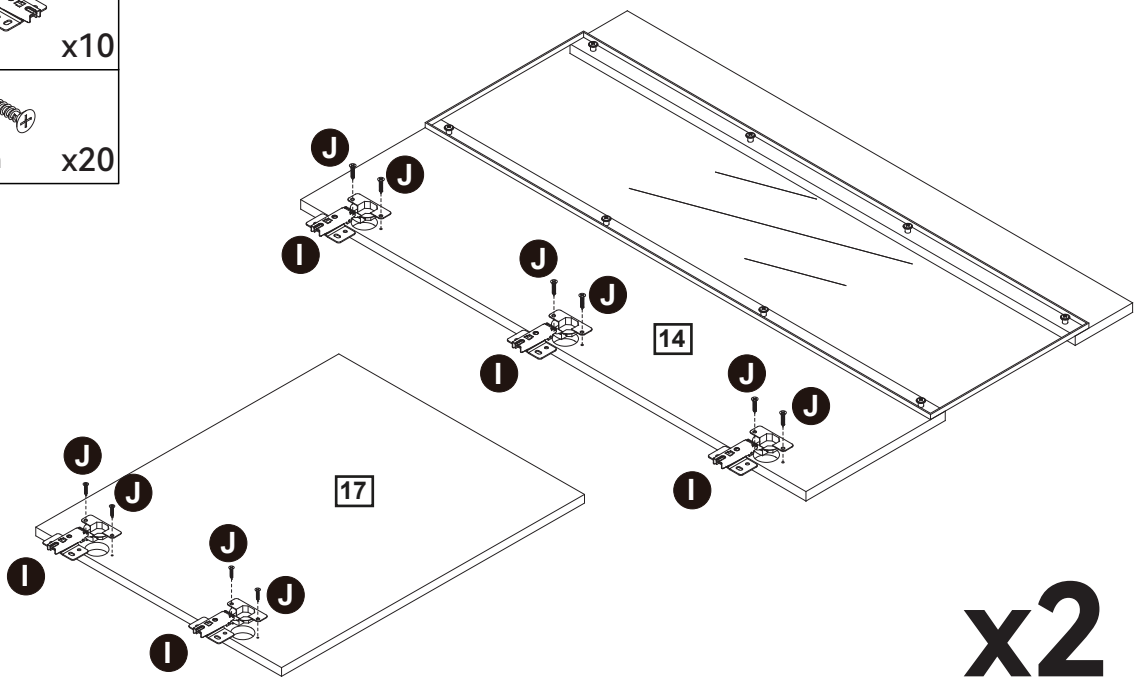

Using screw (J) to scure hinge (I) to part (14, 17).

Step 25

J Ø3.5x14mm	x20
K Door Dumper	x5

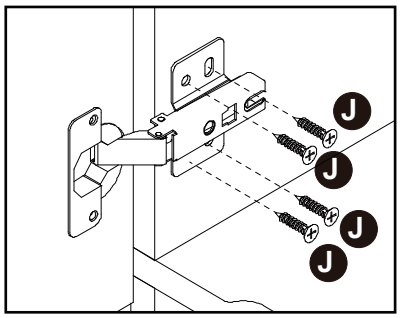

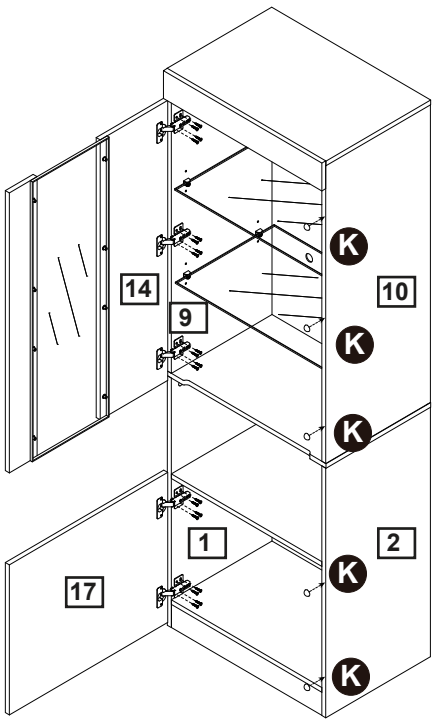

Use screw (J) to secure hinge (I) to part (1, 9) with a screwdriver,and then attach door bumpers (K) to part (2,10).You may refer to page 27 about how to adjust hinge.

Email : **service@grandtunnel.com**

Step 26

J		
Ø3.5x14mm		x20
K		
Door Dumper		x5

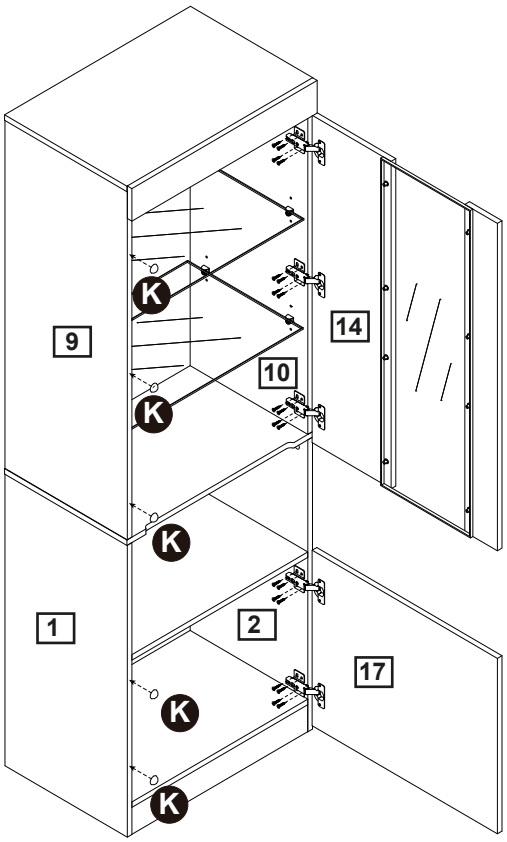

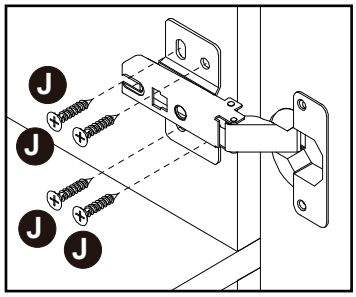

Use screw (J) to secure hinge (I) to part (2, 10) with a screwdriver,and then attach door bumpers (K) to part (1,9).You may refer to page 27 about how to adjust hinge.

Step 27

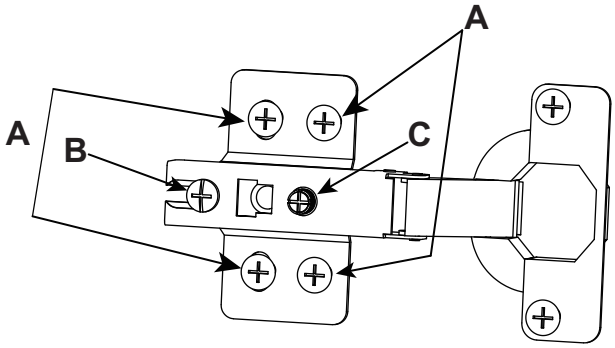

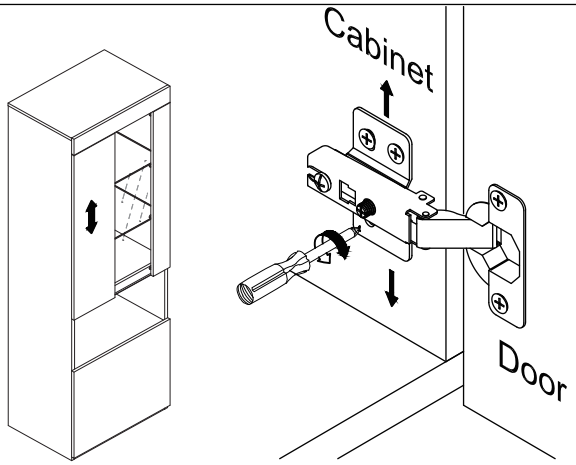

To adjust the vertical height.

Loosen the four screws "A" on both hinges. They are usually in slotted holes which allows you to adjust up or down by a few mm. Then tighten back up.

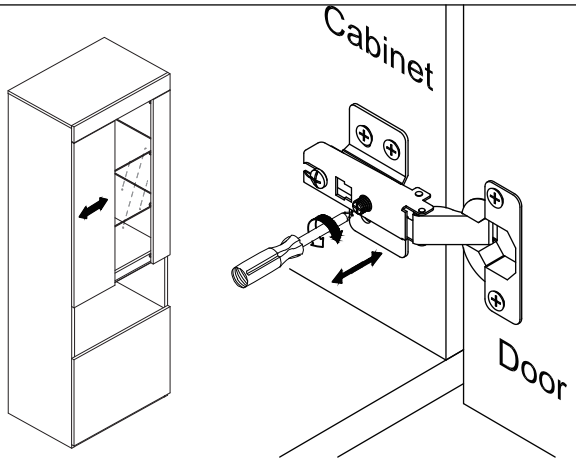

To adjust side ways.

Turning the screw "C" on BOTH hinges on each door.

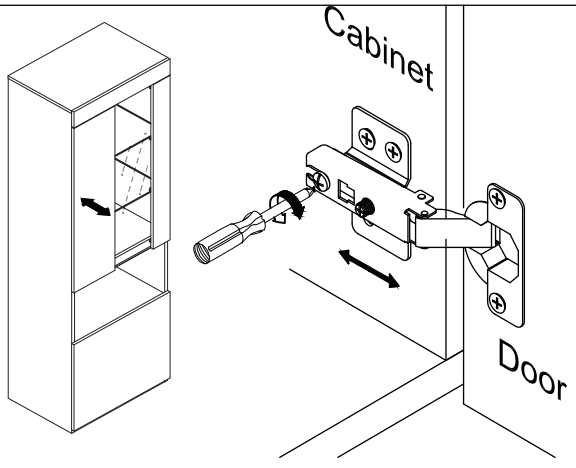

To adjust depth

Loosen screw "B" and adjust door,if the door can not be adjusted,please loosen screw "C" ,then try again.Tighten screw "B" and"C" .

Email : **service@grandtunnel.com**

Step 28

M

LED Strip
Connector Kit x1

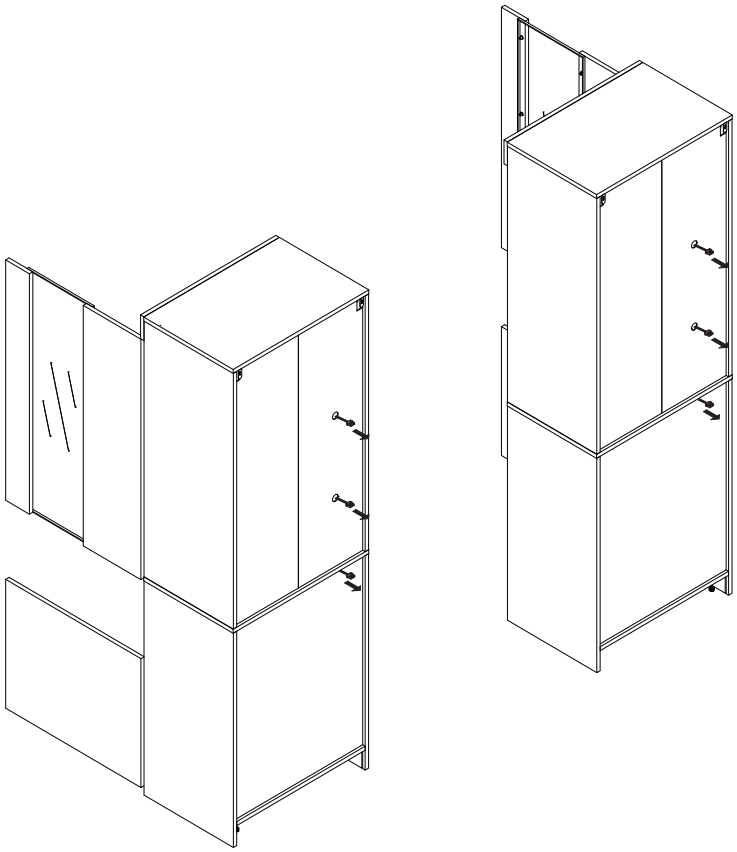

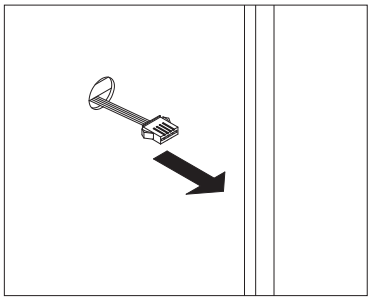

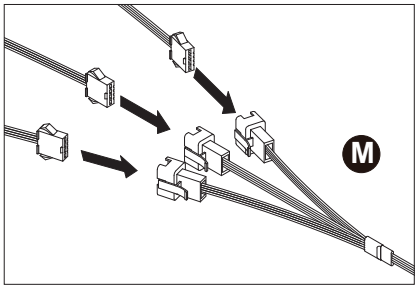

Connect LED lights with the extended cable.

Step 29

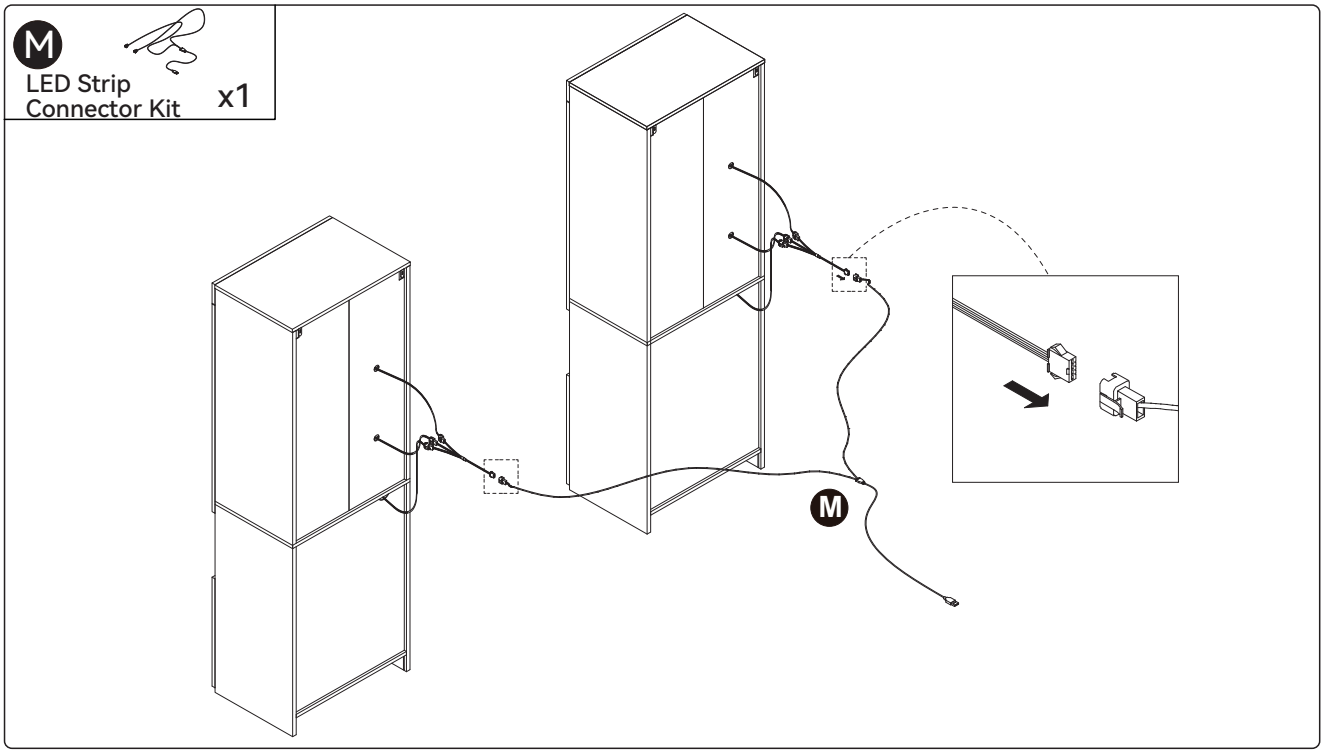

Connect the extended cable with the power cable.

Step 30

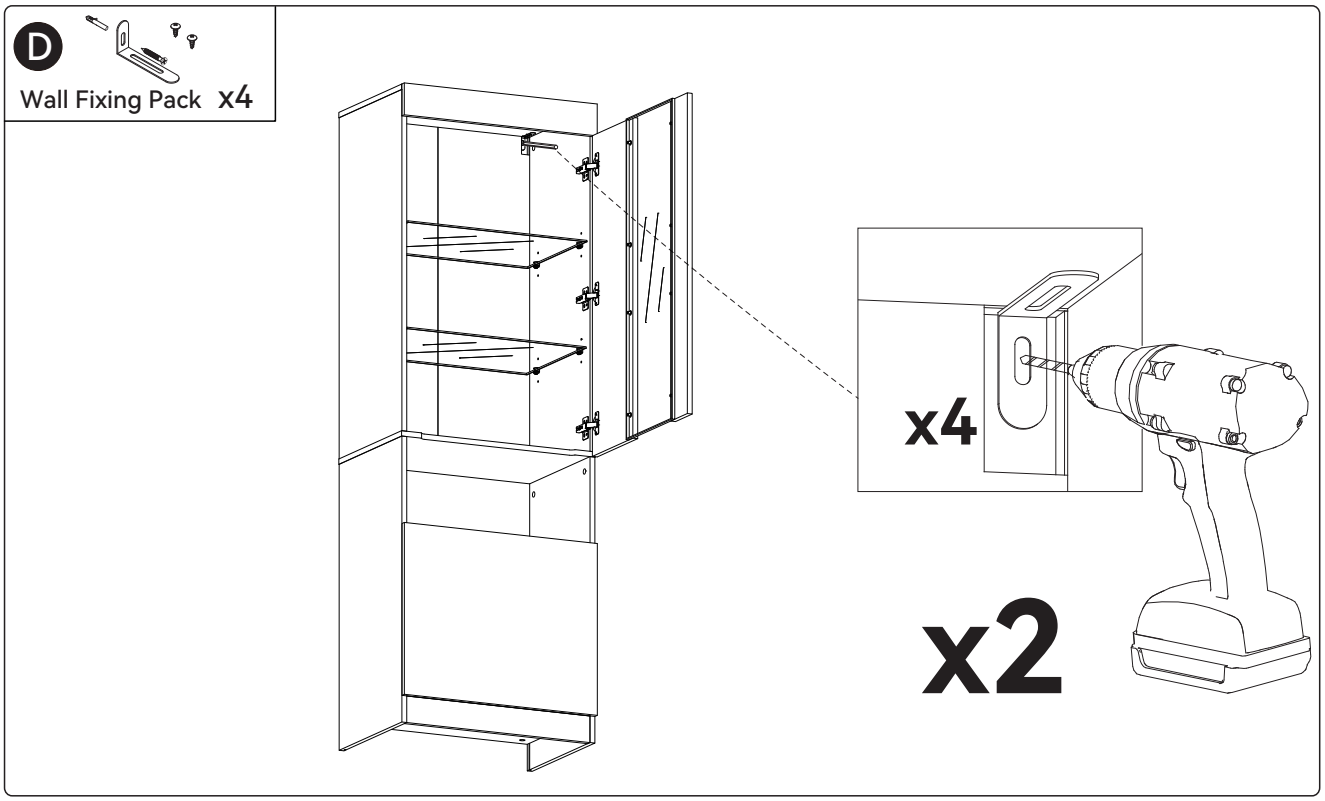

Drill holes on the wall through wall attach bracket (D).

Email : **service@grandtunnel.com**

Step 31

D Wall Fixing Pack x4

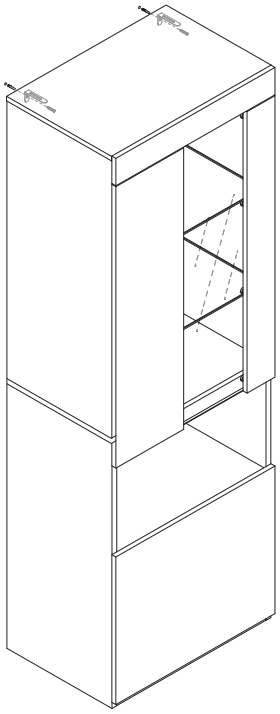

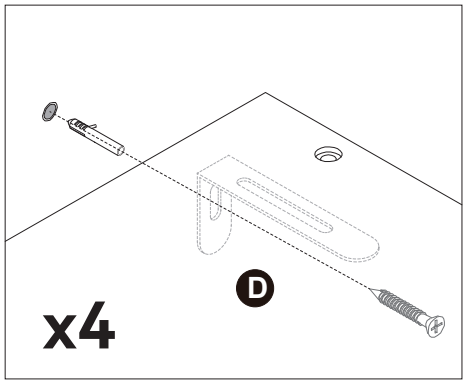

x2

Insert wall plugs into the wall secure the bookcase to the wall using screw (D).

Step 32

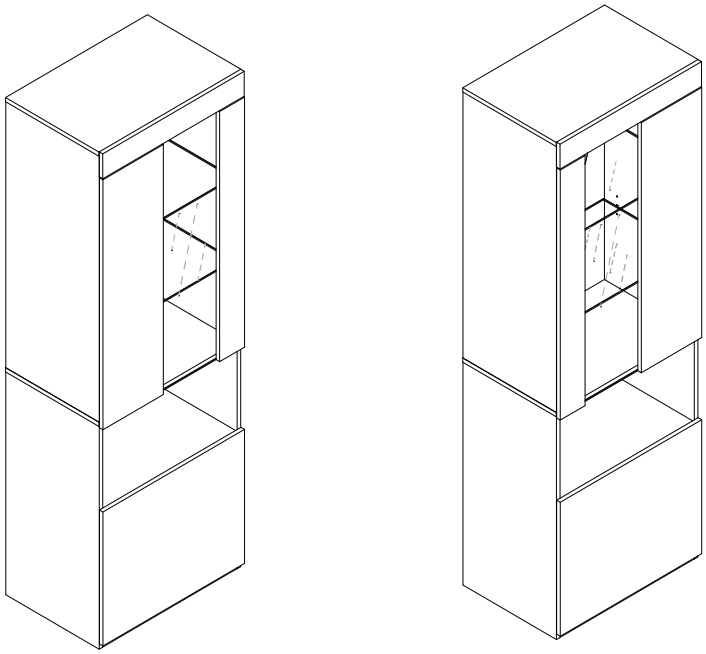

Assembly is completed.

LED Bookcase

SKU:
BG01KN-2B4B1
BG01KN-2B4B2
BG01KN-2B4A1
BG01KN-2B4A2

V1.0