Assembly Instructions

Item:QUEEN BED+TWIN SIZE TRUNDLE SKU :W2336S00025

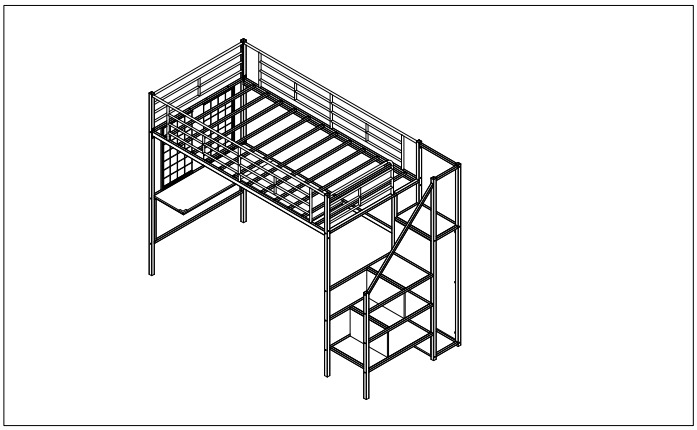

1. Important Safeguards

Read these instructions carefully and retain them for future use. If this product is passed to a third party, then these instructions must be included.

When using the product, basic safety precautions should always be followed to reduce the risk of injury including the following:

⚠ CAUTION Risk of injury!

- **Product can tip over! Do not let children climb on or play with the product.**
- Always use the product on a firm, level ground.
- Do not stand on the product or use it as a step ladder.
- Periodcally check to see that all bolts,screws and knobs are firmly screwed. Tighten them if any are loose.
- Stop using the product at first sign of damage or if parts become detached.
- Keep the fire or all sharp objects away from the product.

2. Before First Use

⚠ DANGER Risk of suffocation!

- **Keep any packaging materials away from children and pets** - these materials are potential source of danger, e.g. Suffocation.
- Check the product for transport damages. Unpack all hardware bags and components to ensure you have all parts before assembly.
- Assemble product on a clean non-marring surface. Remove all the packing materials.

3. Cleaning and Maintenance

- Clean spills immediately by using a soft, clean, lint-free cloth to prevent staining.
- Never use harsh chemicals or solvents on your product as this may damage the product.
- Marks and stains are difficult to remove, we recommend you consult a professional. If you use a professional product, pretest it in an inconspicuous area for any signs of discoloration or shrinking.

①x 1 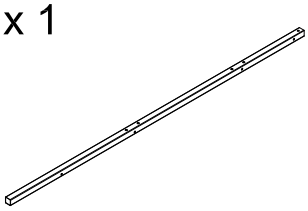	②x 1 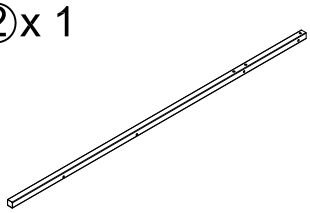	③x 1 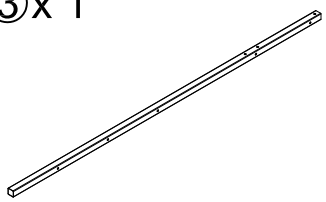
④x 1 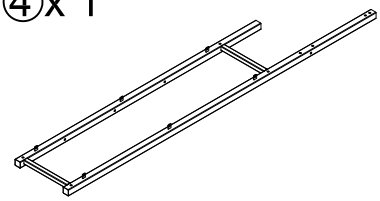	⑤x 1 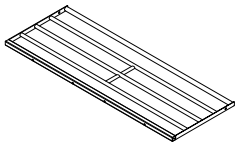	⑥x 1 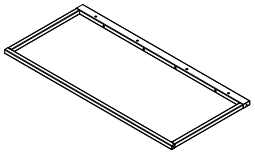
⑦x 1 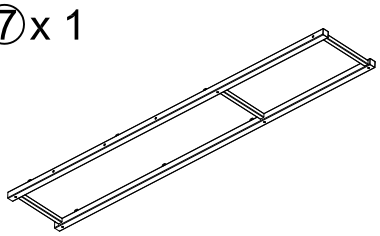	⑧x 2 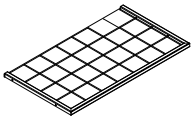	⑨x 1 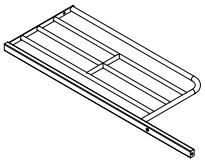
⑩x 2 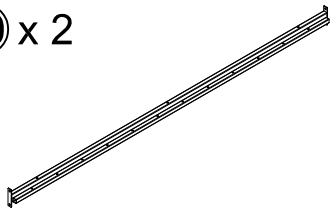	⑪x 2 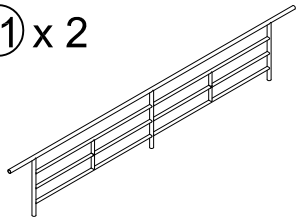	⑫x 1 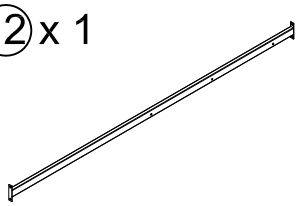
⑬x 12 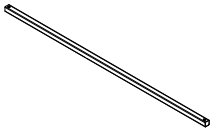	⑭x 1 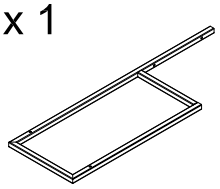	⑮x 1 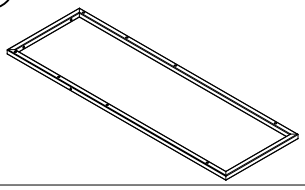
⑯x 1 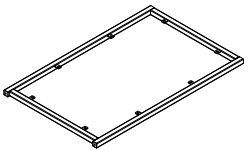	⑰x 1 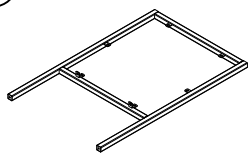	⑱x 1 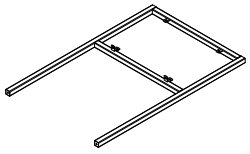
⑲x 2 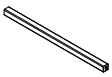	⑳x 2 	㉑x 1 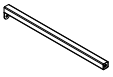
㉒x 1 	㉓x 1 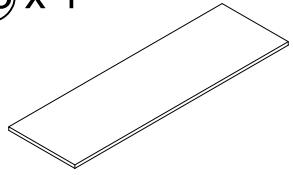	㉔x 1 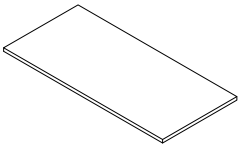

25 x 1 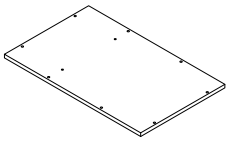	26 x 1 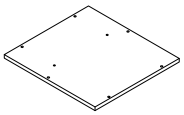	27 x 1 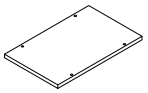
28 x 1 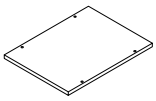	29 x 2 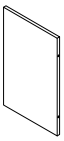	30 X2 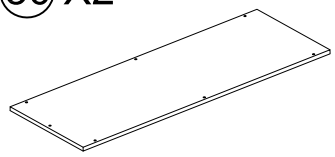
31 x 1 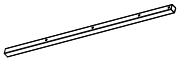	32 x 1 	A x 41(+1 extra)  M6X12mm
B x 13(+1 extra)  M6X25mm	C x 4(+1 extra)  M6X40mm	D x 49(+1 extra)  M6X30mm
E x 2(+1 extra)  M6X40mm	F x 45(+1 extra)  M6X50mm	G x 13(+1 extra) 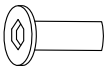
H x 2 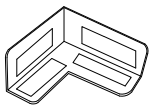	I x 2 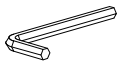 M4	

1

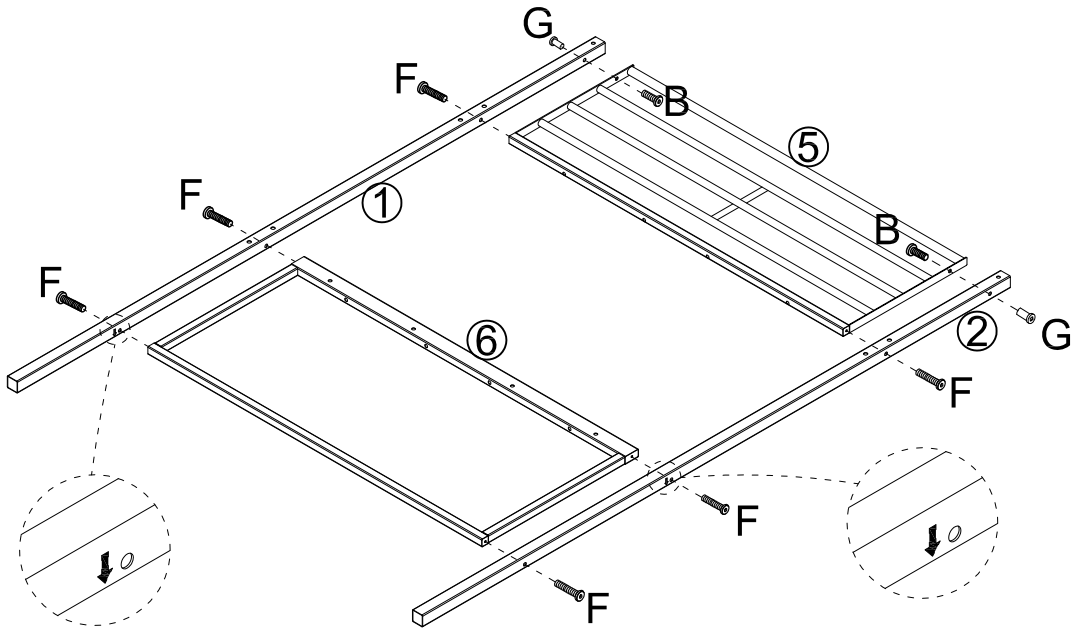

2

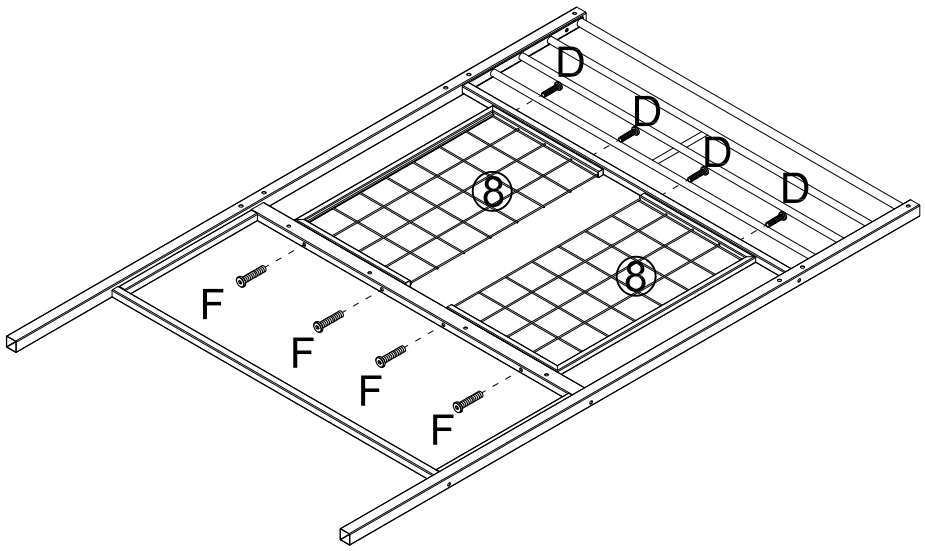

3

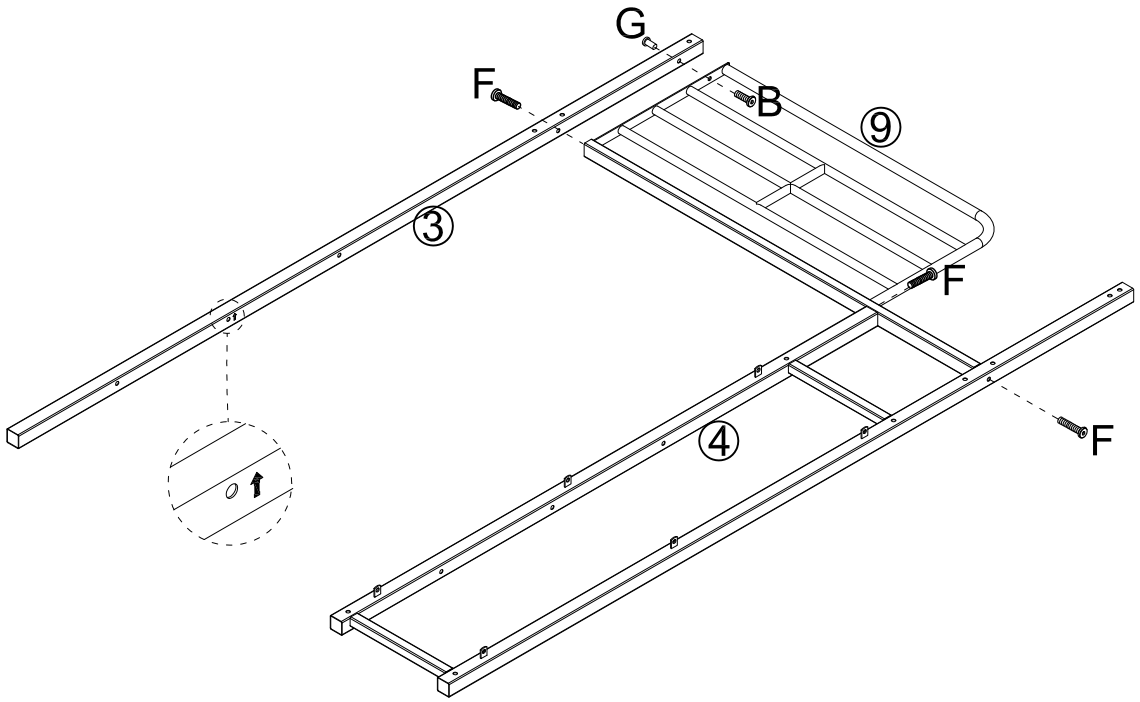

4

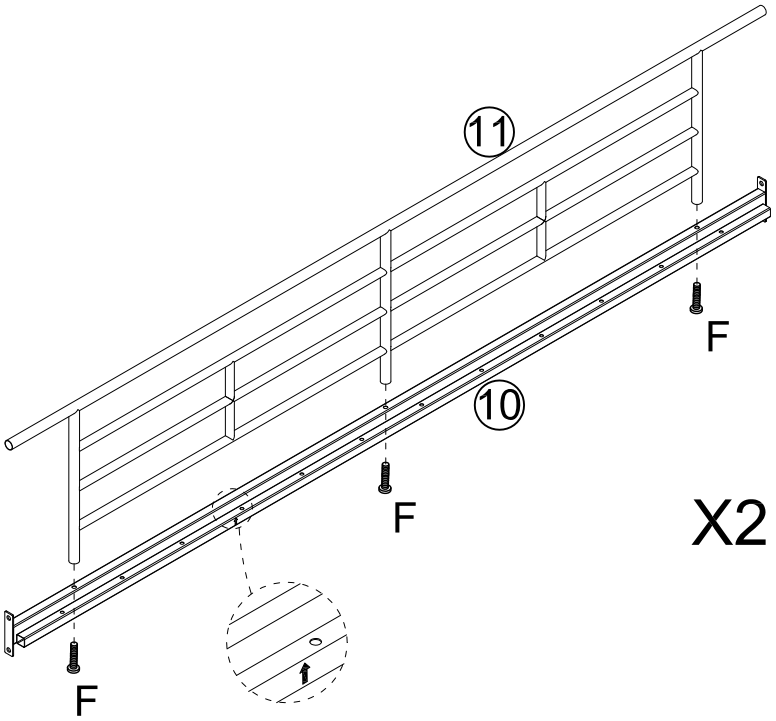

X2

5

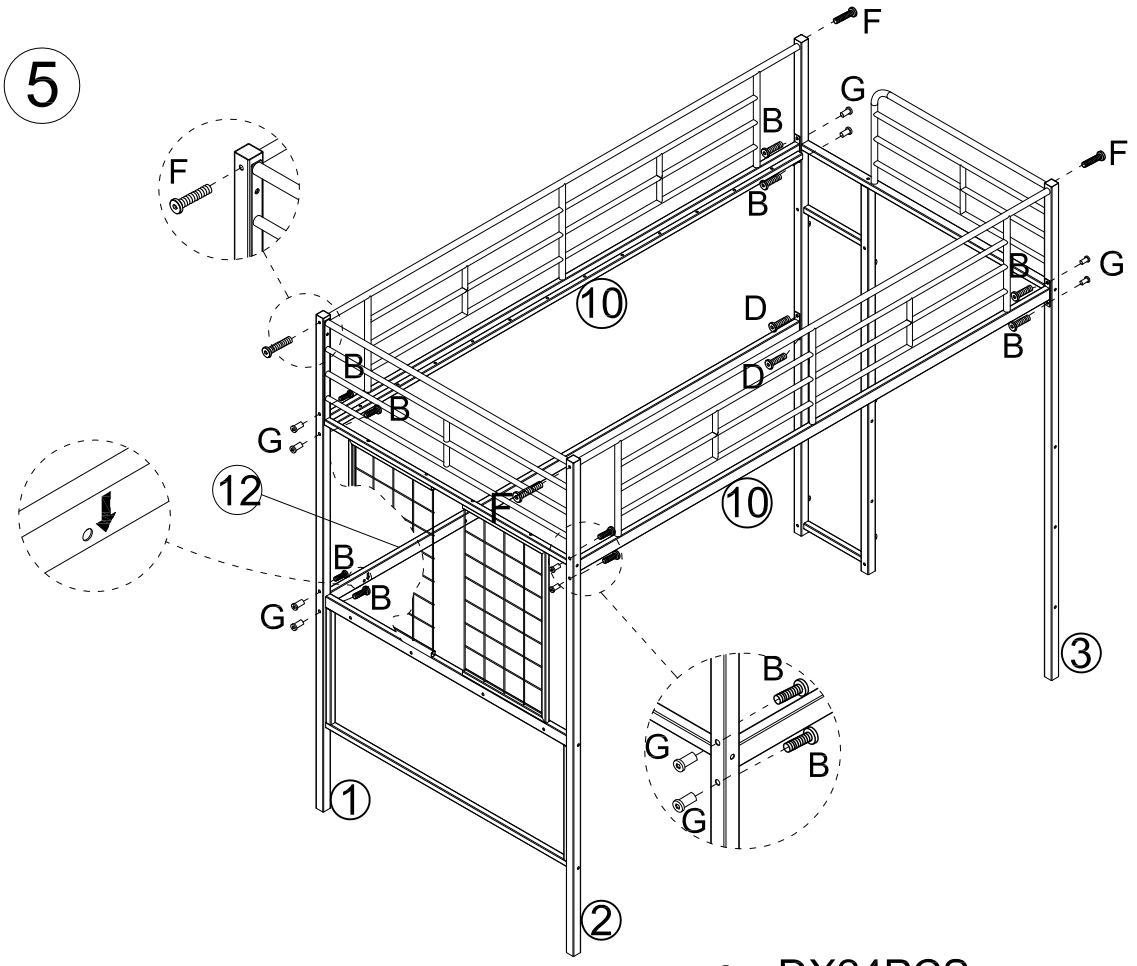

6

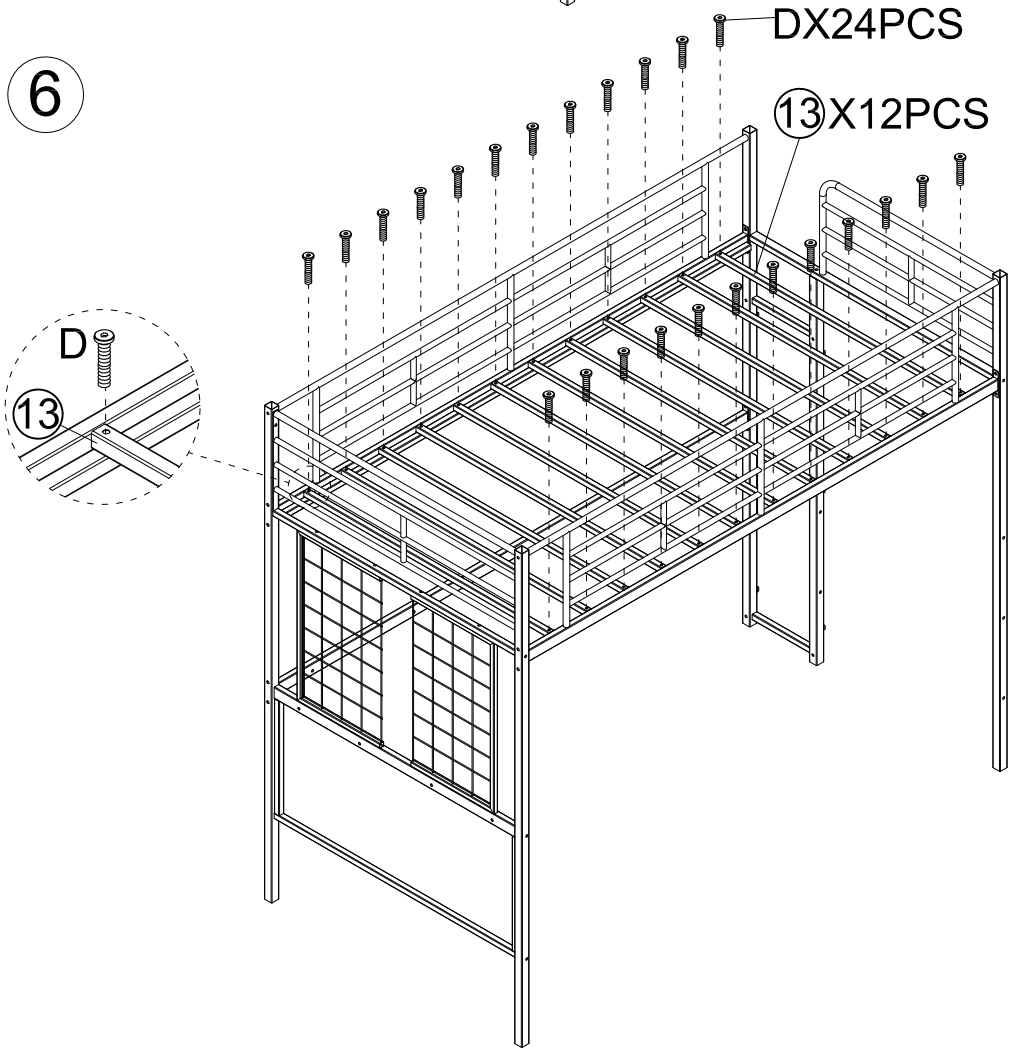

7

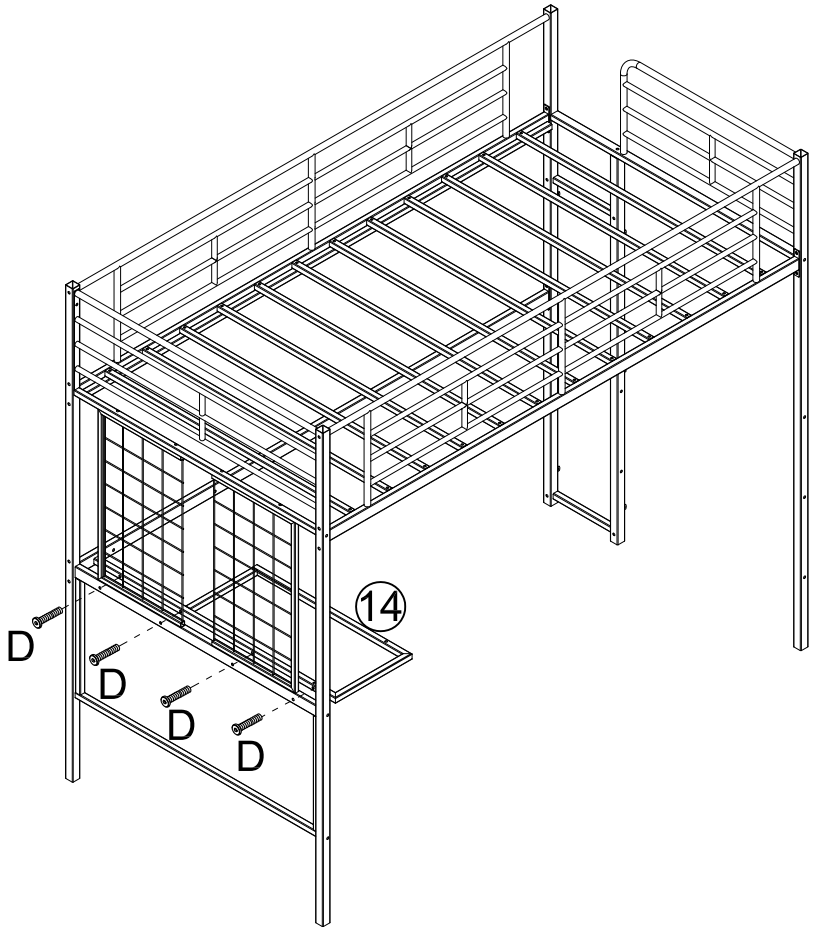

8

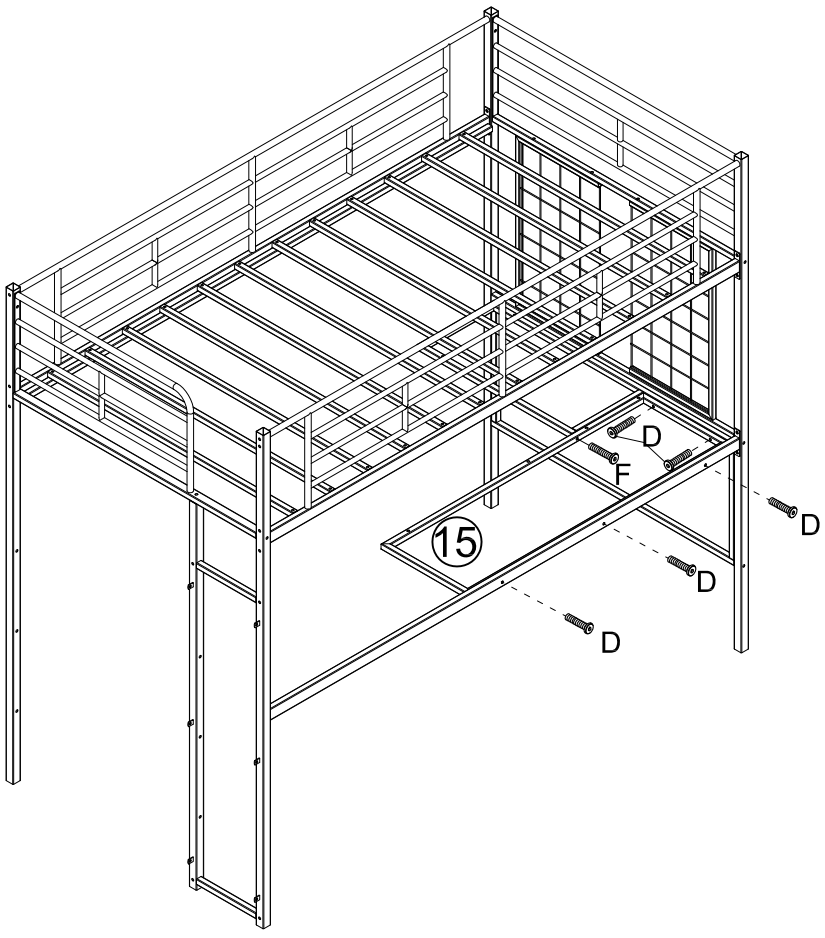

9

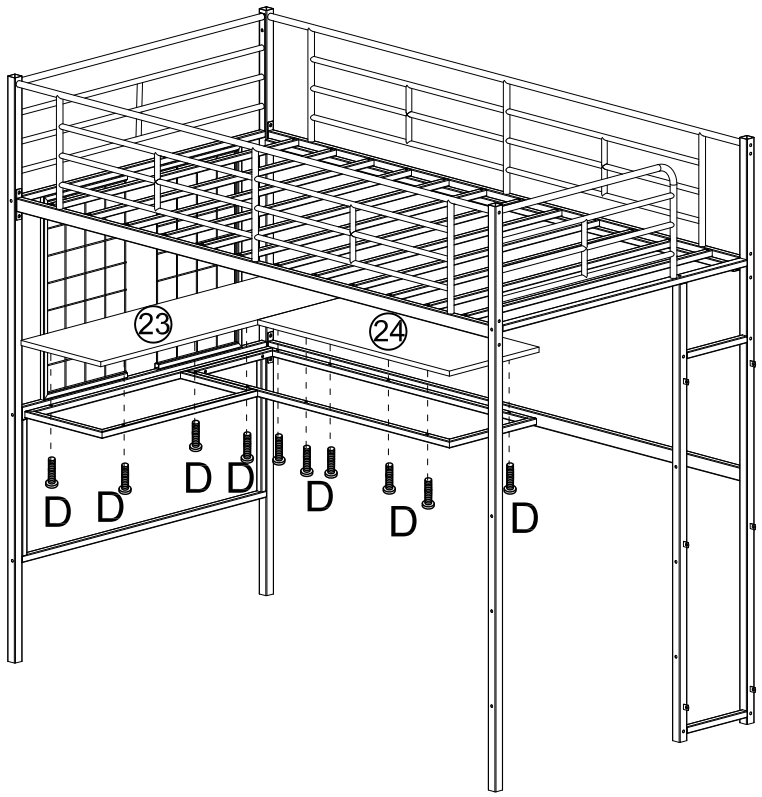

10

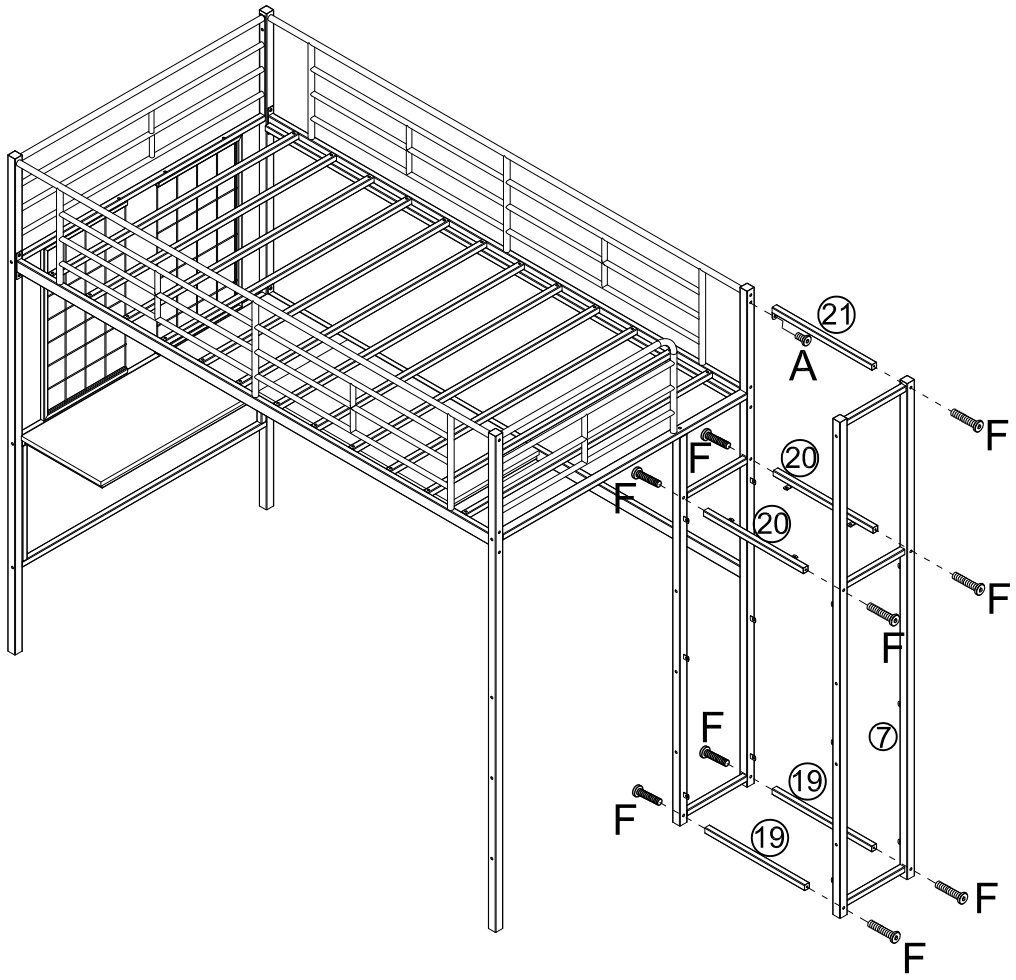

11

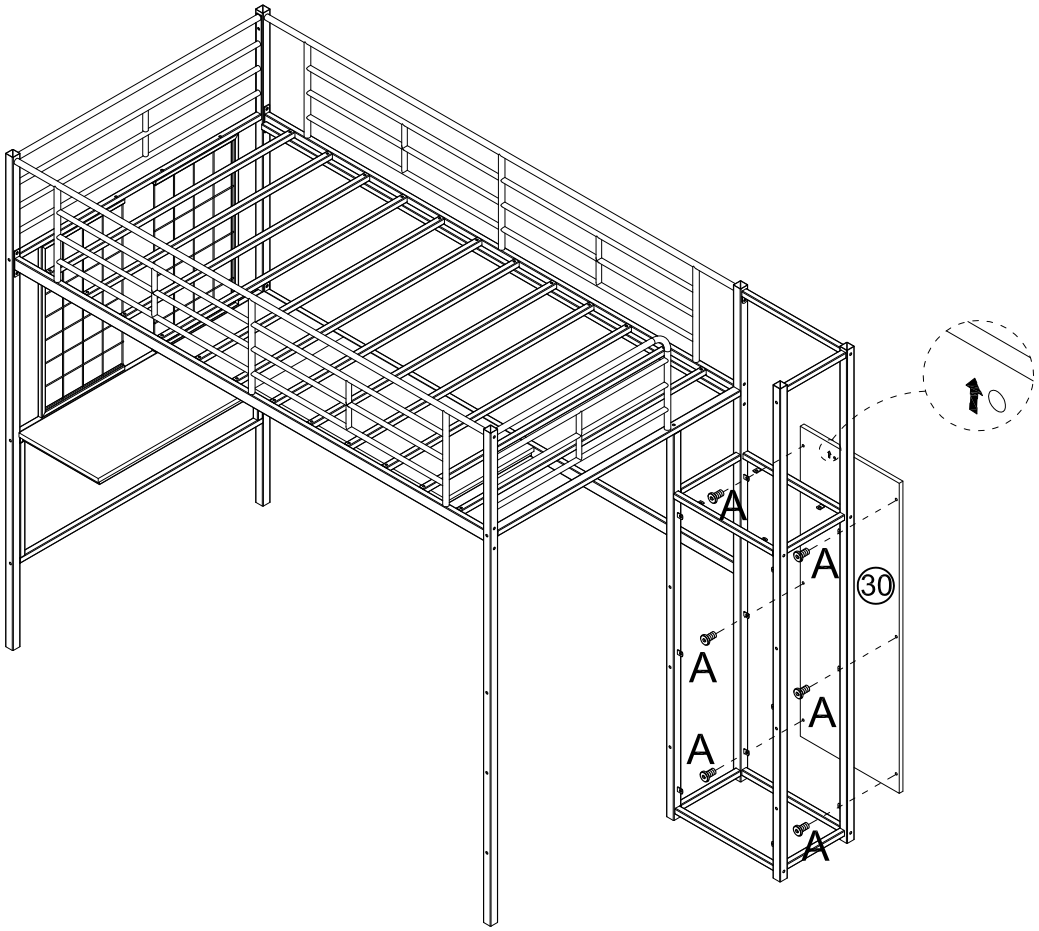

12

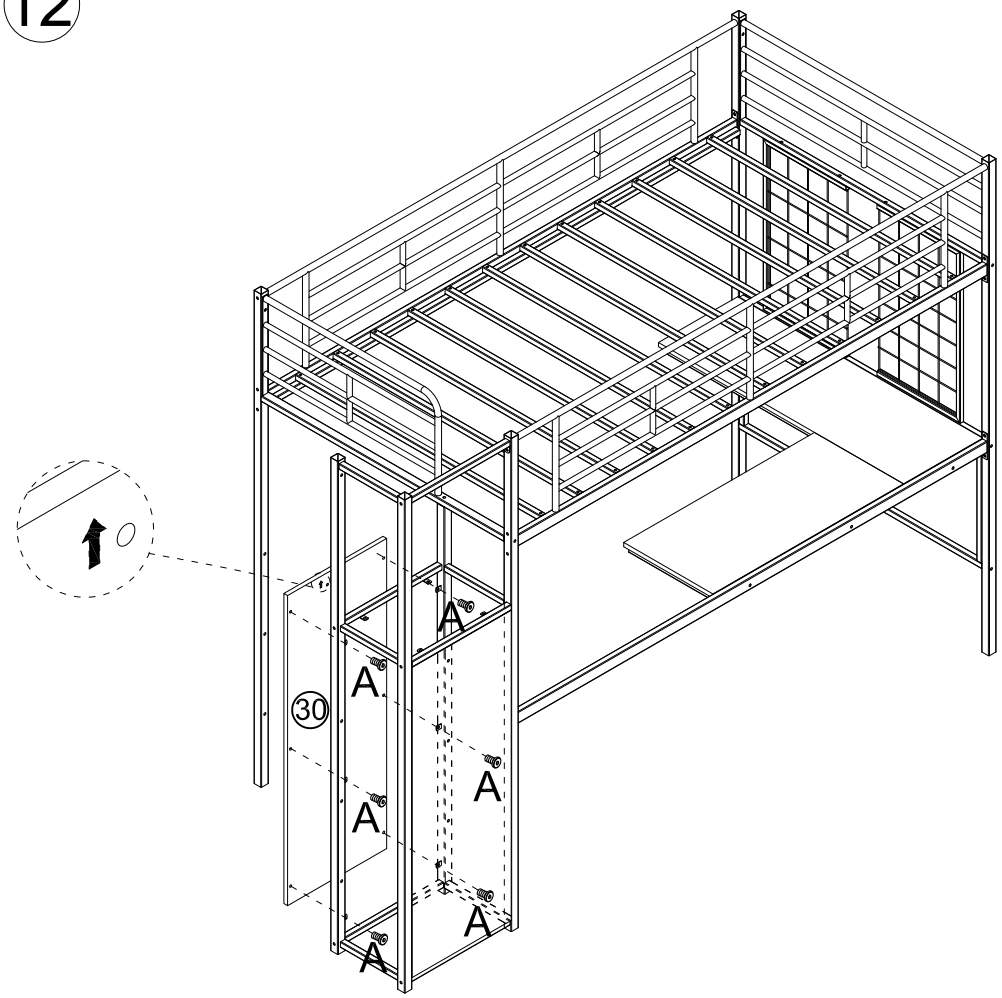

13

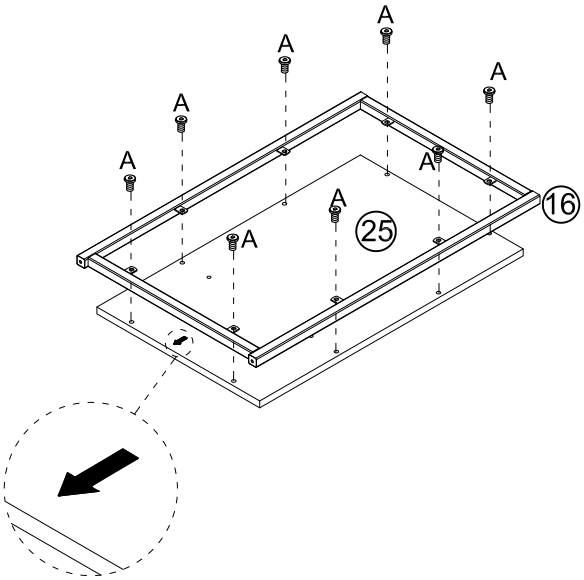

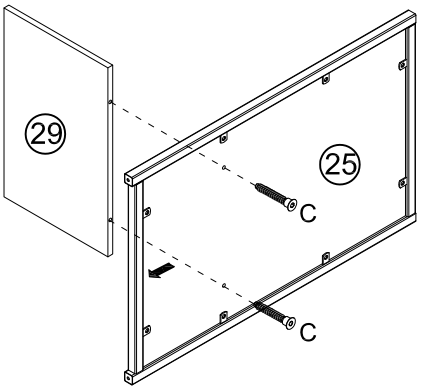

14

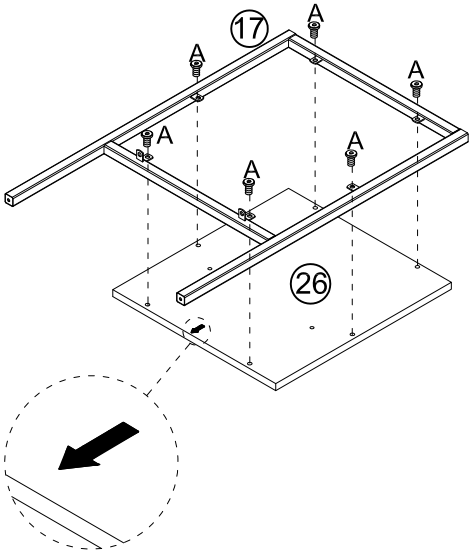

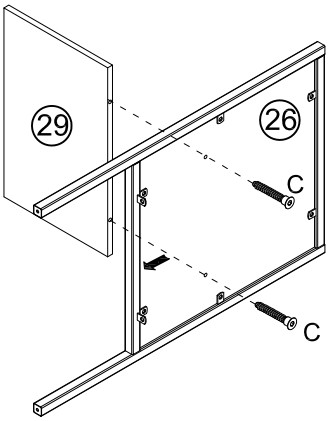

15

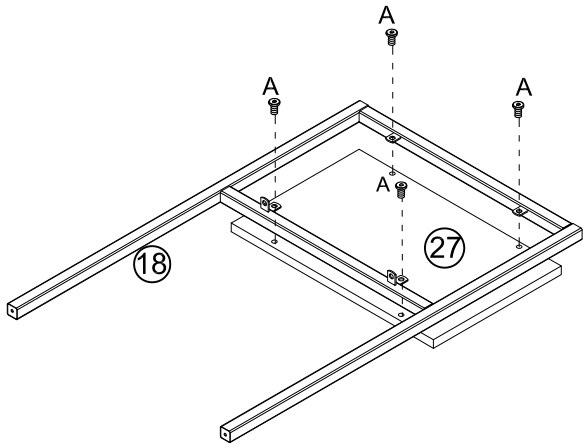

16

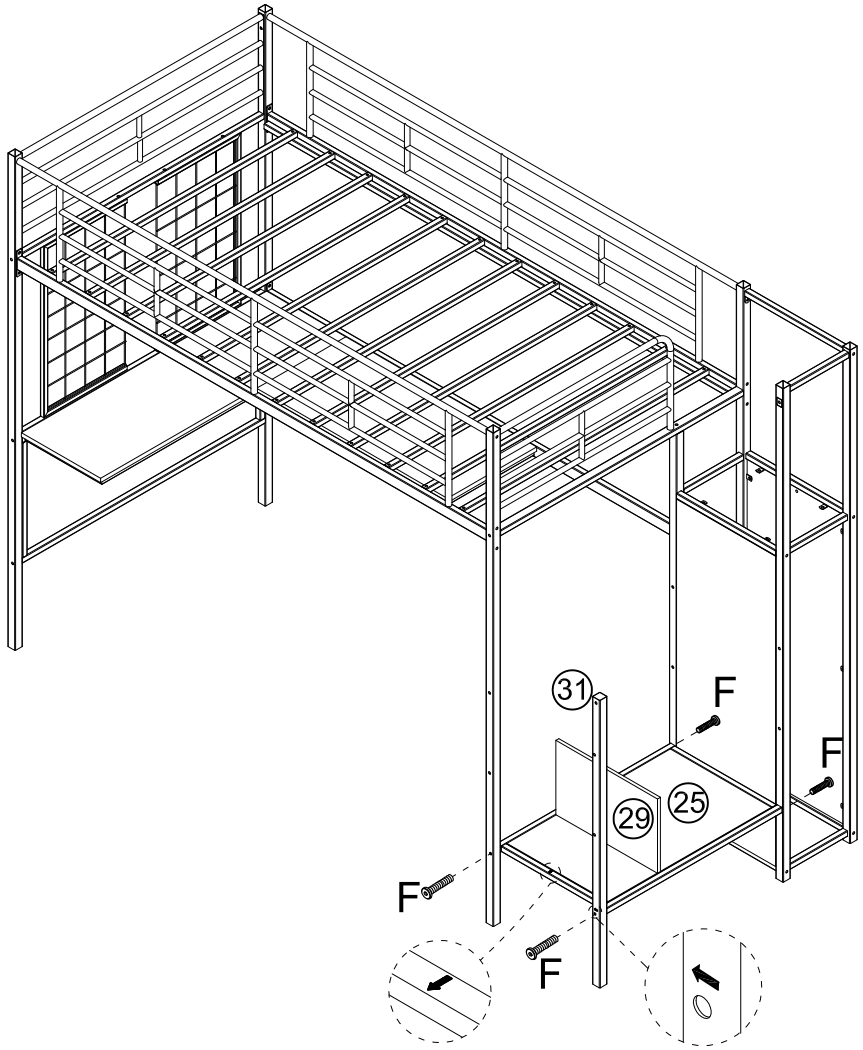

17

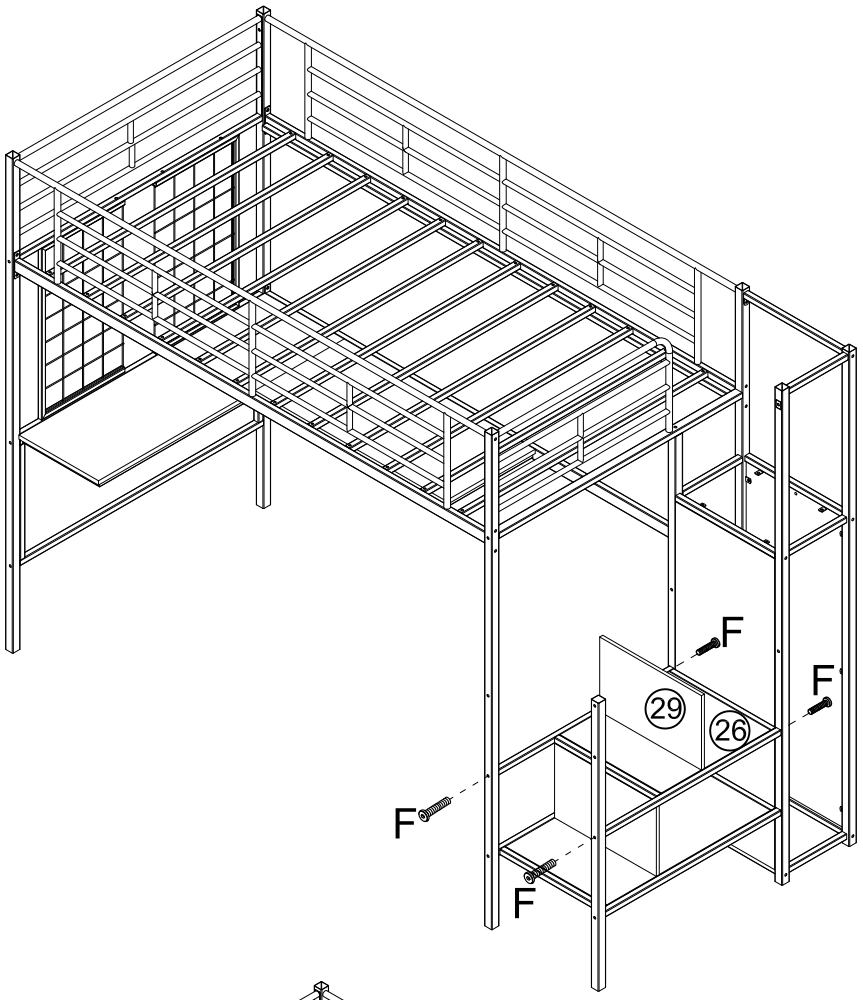

18

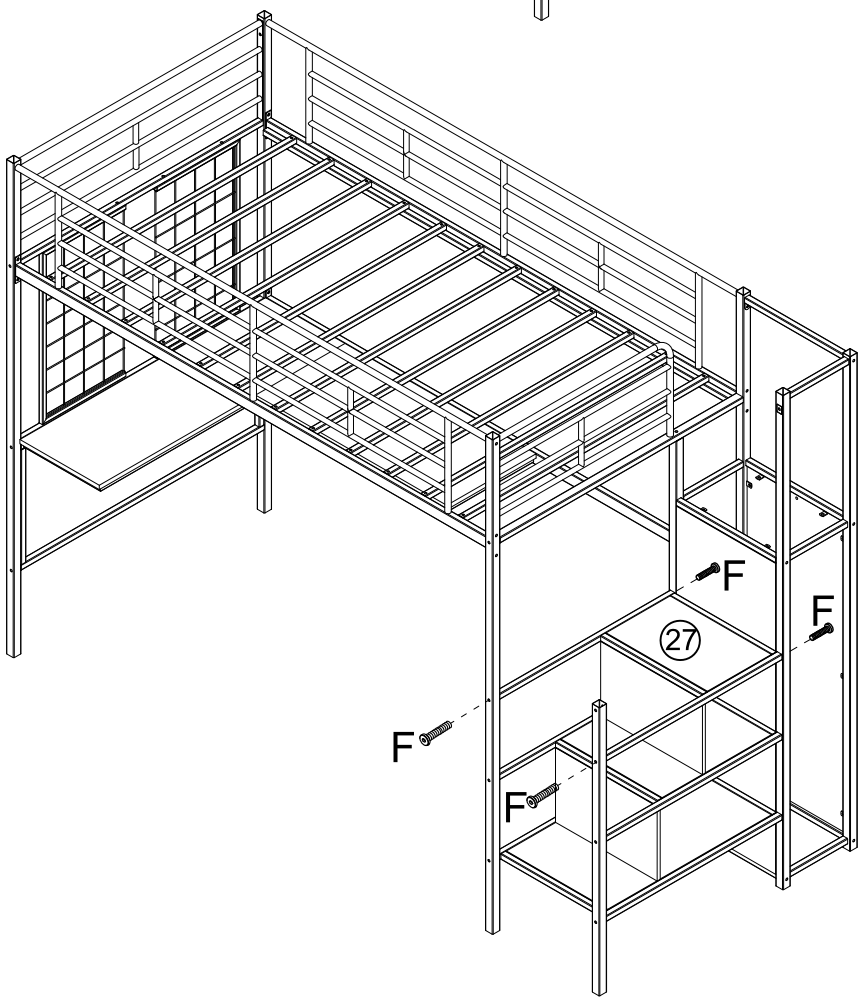

19

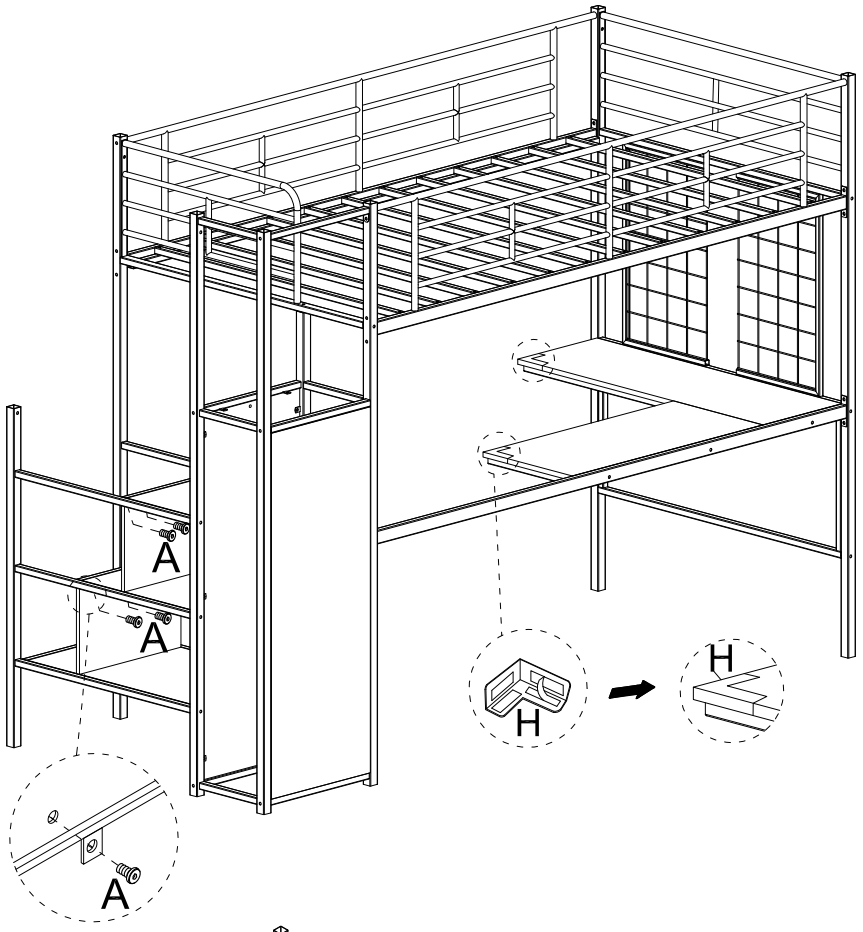

20

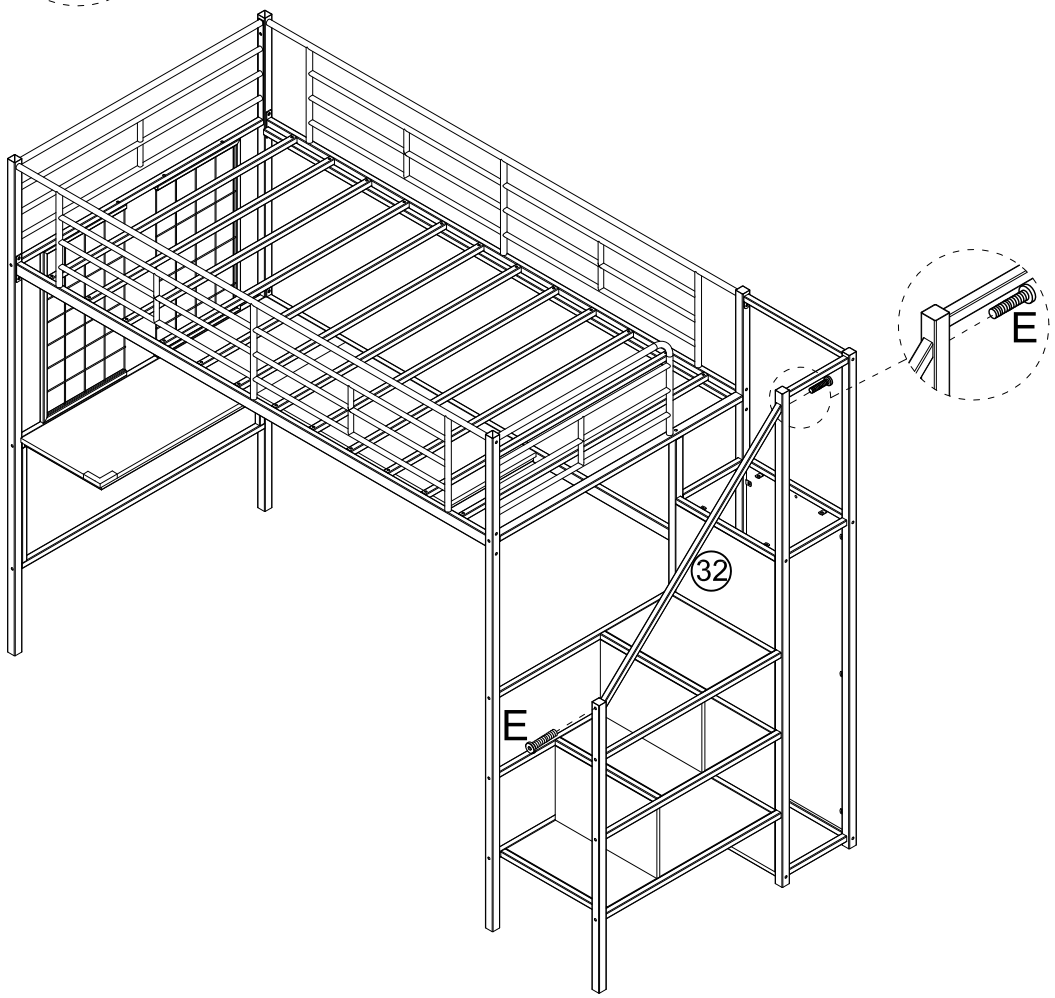

21

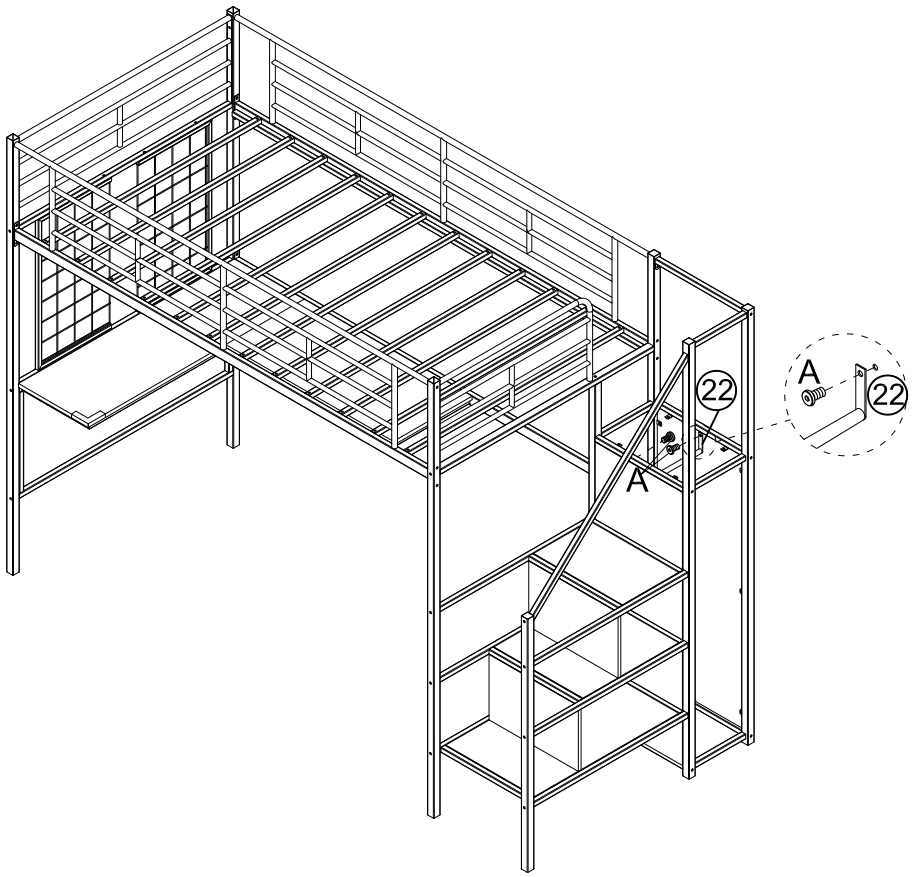

22

