Assembly Instructions

Caution : You must read this before you proceed

Care & Maintenance



- Not for commercial use. For residential use only.



- Furniture may scratch floors. We recommend using furniture pads to protect your floors.



- Do not put hot items directly on furniture surface.



- Do not clean furniture with harsh cleansers or polish.



- Do not place furniture under direct sunlight.



- Do not place furniture near heating or cooling vents.



- Do not write on furniture without a padded barrier to protect the surface.



- Do not place furniture outside . For indoor use only.



- Stains may be removed with mild soap solution and damp cloth.



- Children should not climb or jump on the furniture.



- Dust and pick-up spills using a clean, non-colored, lint-free cloth.

Please look in Carton for hardware packs and legs.
Sets often ship in multiple boxes and may arrive a day or two apart.

COUNTER STOOL

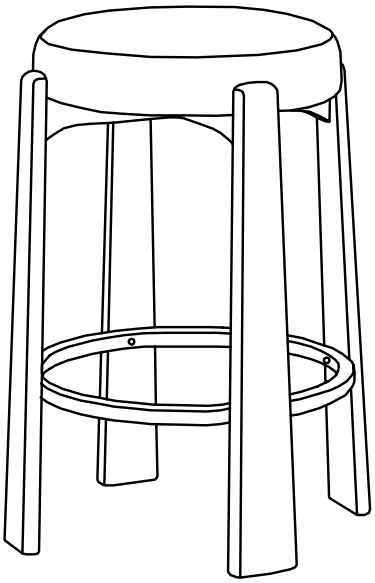

Parts List

Label	Picture	Description	QTY
A		Legs	4
B1		Seat Rail	1
B2	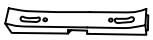	Seat Rail	1
C	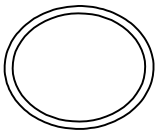	Round Stretcher	1
D	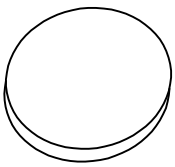	Cushion Seat	1
E	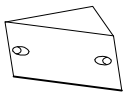	Corner Blocks	4

Hardware

Label	Picture	Description	QTY
①		JCBC Screw (M6*60)	4
②	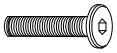	JCBC Screw (M6*35)	4
③		CSK Screw (M4*38)	12
④	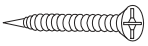	CSK Screw (M4*20)	8
⑤		Nylon Washer (c95)	4
⑥		Spring Washer (M6)	4
⑦		L Bracket (2 Hole)(18*20*1.2)	4
⑧		Allen Wrench (M4)	1
⑨	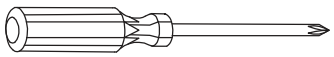	Screwdriver	Not Provided

Assembly Preparation

Before Beginning Assembly:


A

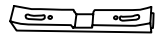
B1

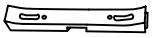
B2

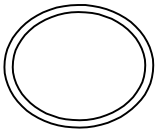
C

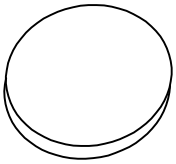
D

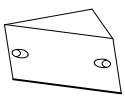
E


X 4 PCS


X 4 PCS


X 12 PCS


X 8 PCS


X 4 PCS


X 4 PCS


X 4 PCS


X 1 PC


- Read instructions, cover to cover-


- Have 2 adults on hand for asssembly-


- Do not assemble on flooring or carpet-

- Assemble on a clean non-marring surface (packing foam)-
- Save all packaging until finished-

Assembly Steps

Overview

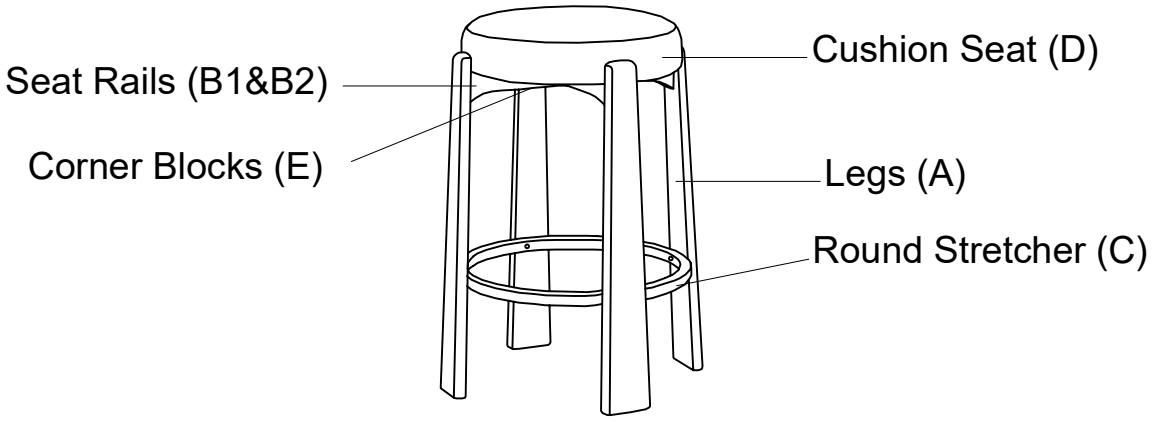

This Chair has multiple parts and may require up to some 30 minutes to assemble. To give you an overview of the chair parts, the above picture is to help you put the various parts into perspective. Please read through the instructions below to familiarise yourself with the parts and steps before assembly.

Step 1


A

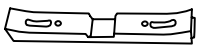
B1

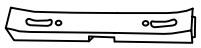
B2

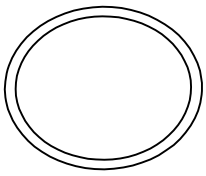
C

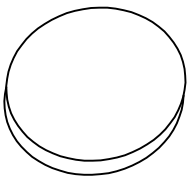
D

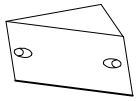
E

Place all Parts on a clean, flat surface.

Step 2

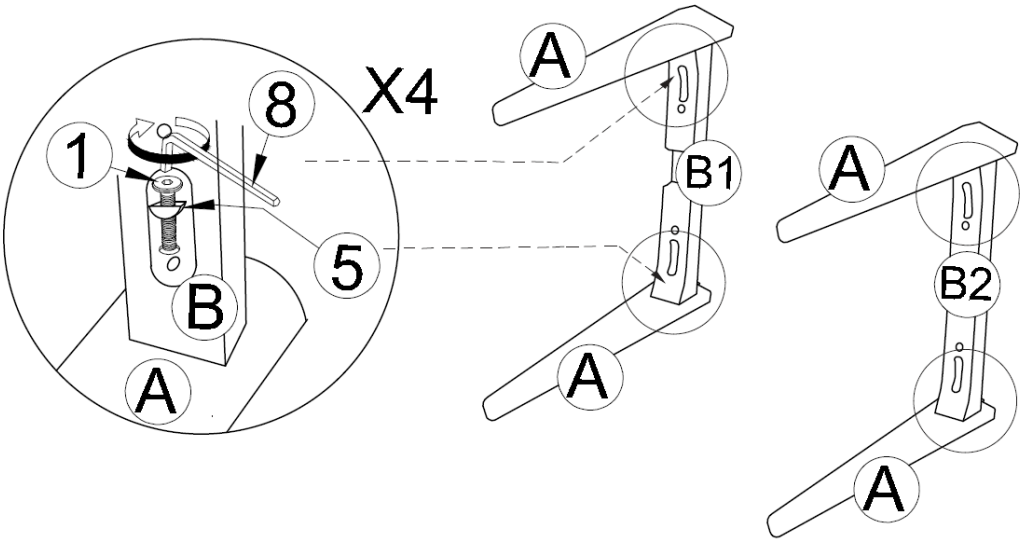

Place the Legs (A) on a clean, non-marring surface.
Install the Seat Rails (B1 & B2) onto the Legs (A) using JCBC Screws (M6×60mm) (①) and Nylon Washers (c95) (⑤) with the Allen Wrench (M4) (⑧), as shown above.
Do Not Fully Tighten the Screws.

Step 3

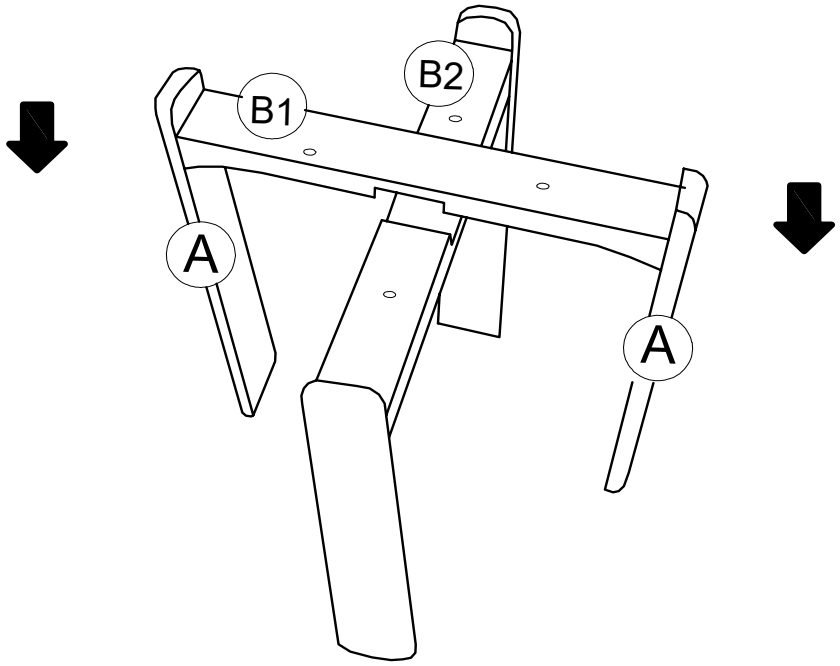

Attach the two assembled Legs (A) with Seat Rails (B1 & B2) together.

Ensure Seat Rail (B1) is on the upper side and Seat Rail (B2) is on the bottom side.

Step 4

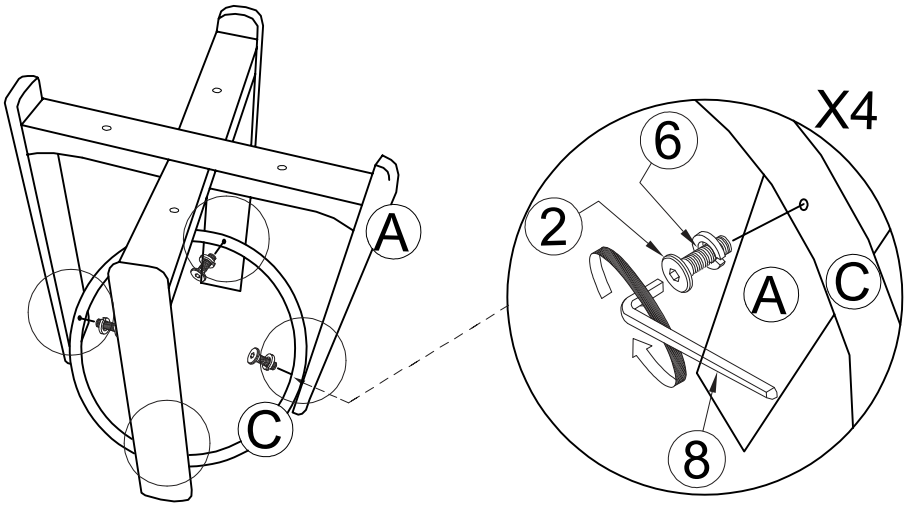

Install the Round Stretcher (C) onto the Front Legs (A) using JCBC Screws (M6×35mm) (②) and Spring Washers (M6) (⑥) with the Allen Wrench (M4) (⑧).

Do Not Fully Tighten the Screws.

Step 5

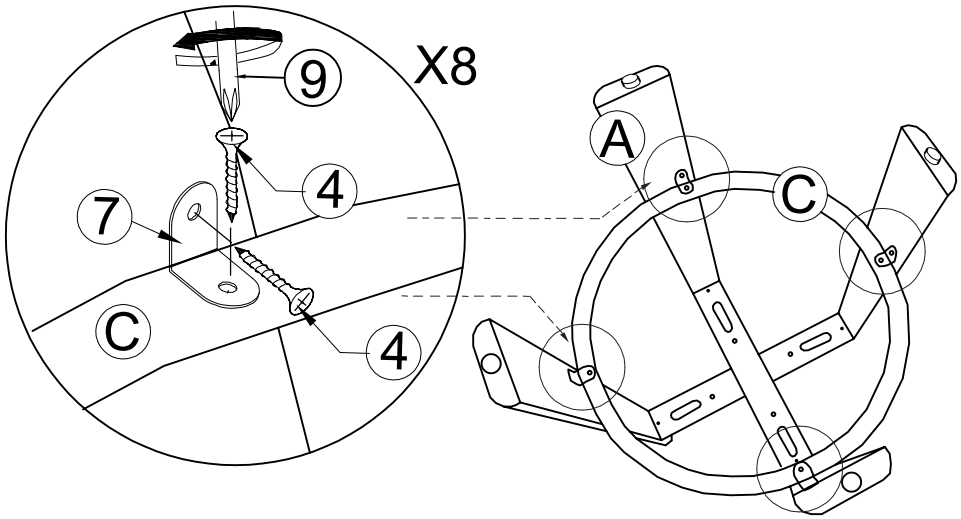

Place the chair upside down as shown.
Mount the 2-hole L Bracket (18×20×1.2) (⑦) using CSK Screws (M4×20) (④) and Screwdriver (⑨), as illustrated above.

Do Not Fully Tighten the Screws.

Step 6

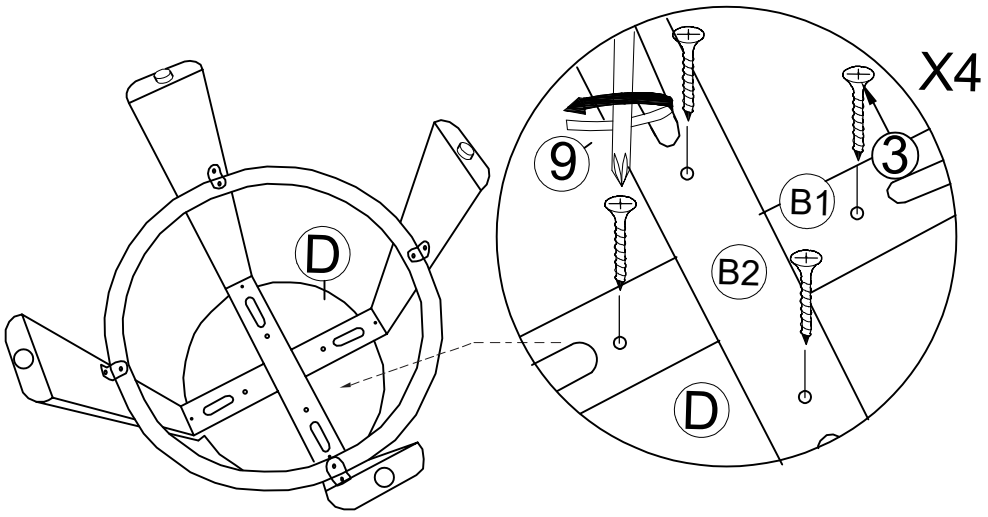

Install the Seat Rails (B1 & B2) onto the Cushion Seat (D) using CSK Screws (M4×38mm) (③) and Screwdriver (⑨).

Do Not Fully Tighten the Screws.

Step 7

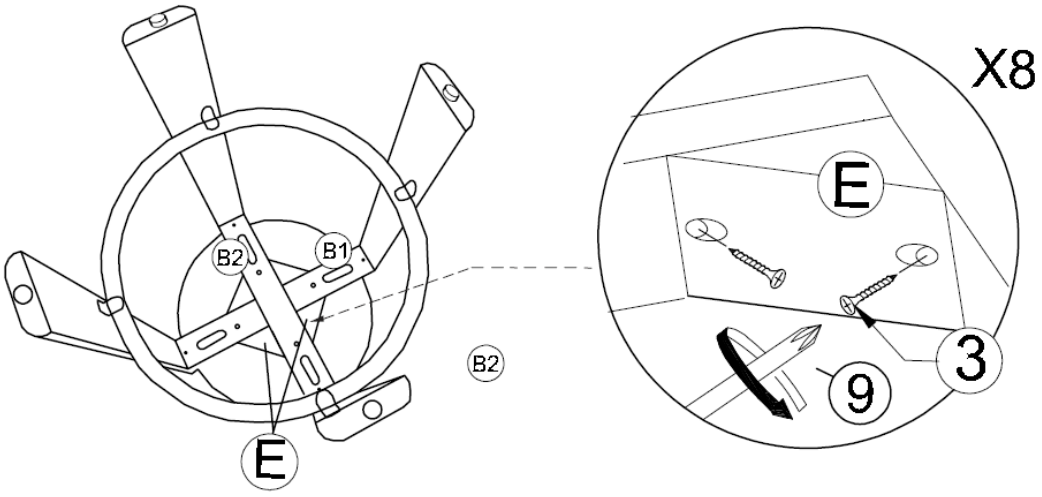

Install the Corner Blocks (E) onto the Seat Rails (B1 & B2) using CSK Screws (M4×38mm) (③) and Screwdriver (⑨).

Check all components for proper assembly, then FULLY TIGHTEN all the screws.

Step 8

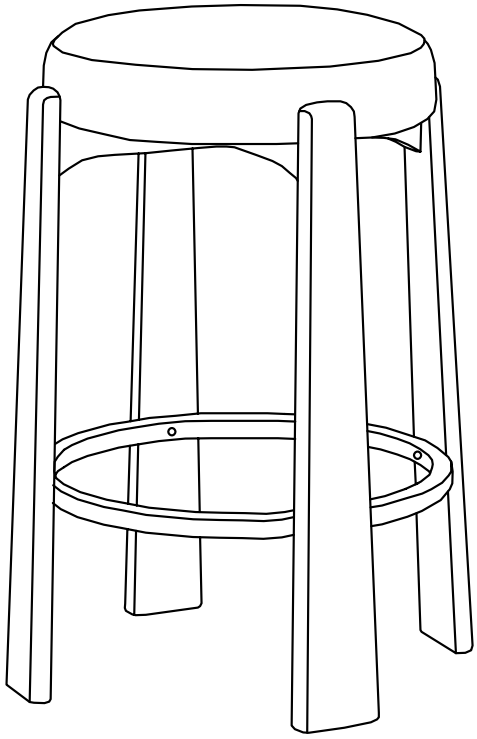

Final Assembly & Safety Check

Turn the counter stool right side up and place it on a level surface.

Inspect the counter stool to ensure all parts are properly connected.

Sit gently on the counter stool to help align all joints and connections.

Step off the counter stool and, in a sequential manner, proceed to tighten all bolts.

You may need to turn the Counter stool to access certain bolt points, alwalys turn it carefully and in a synchronized manner with assistance if needed.

CAUTION 1: Tighten all bolts gradually and sequentially.
Do not fully tighten one bolt before moving to the next, as this may cause the frame to warp.

If the Counter stool still wobbles, loosen the screws slightly and repeat the tightening process.

WARNING: If the counter stool is not stable, this may lead to product damage. Always ensure all bolts are securely locked into position before use.

The counter stool is now ready for use.

This counter stool can only be used on a flat, level surface.

Questions & Answers about Proposition 65

- What is Proposition 65?

Proposition 65 requires businesses to provide warnings to Californians about significant exposures to chemicals that cause cancer, birth defects or other reproductive harm. These chemicals can be in the products that Californians purchase, in their homes or workplaces, or that are released into the environment. By requiring that this information be provided, Proposition 65 enables Californians to make informed decisions about their exposures to these chemicals.

Proposition 65 also prohibits California businesses from knowingly discharging significant amounts of listed chemicals into sources of drinking water.

Proposition 65 requires California to publish a list of chemicals known to cause cancer, birth defects or other reproductive harm. This list, which must be updated at least once a year, has grown to include approximately 900 chemicals since it was first published in 1987.

- What types of chemicals are on the Proposition 65 list?

The list contains a wide range of naturally occurring and synthetic chemicals that include additives or ingredients in pesticides, common household products, food, drugs, dyes, or solvents. Listed chemicals may also be used in manufacturing and construction, or they may be byproducts of chemical processes, such as motor vehicle exhaust.

- What does a warning mean?

If a warning is placed on a product label or posted or distributed at a workplace, a business, or in rental housing, the business issuing the warning is aware or believes that it is exposing individuals to one or more listed chemicals.

By law, a warning must be given for listed chemicals unless the exposure is low enough to pose no significant risk of cancer or is significantly below levels observed to cause birth defects or other reproductive harm.

- Where can I get more information on Proposition 65?

If you have specific questions on the administration or implementation of Proposition 65, you can contact OEHHA's Proposition 65 program at P65.Questions@oehha.ca.gov, or by phone at (916) 445-6900.