ASSEMBLY INSTRUCTION P1

Attention:Do not tighten screws until all of them are in right positions.

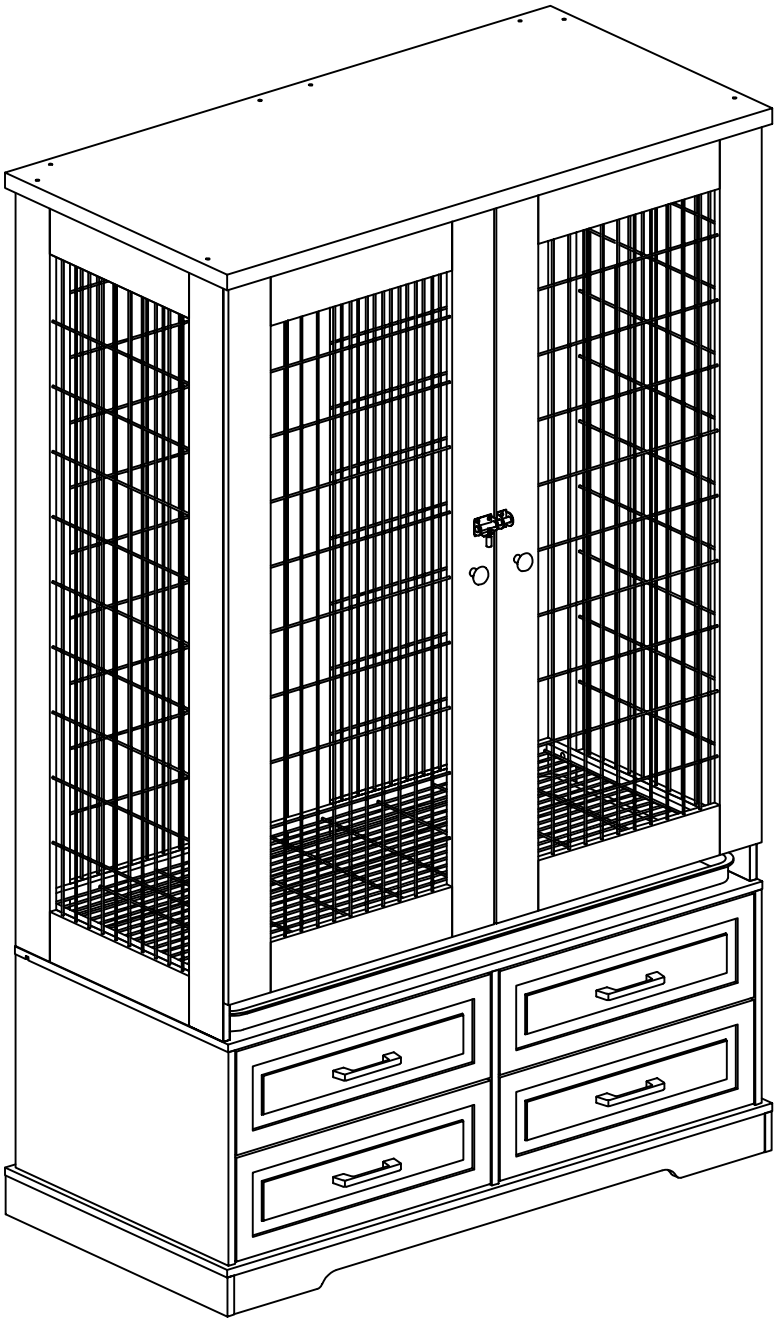

ASSEMBLY INSTRUCTION P2

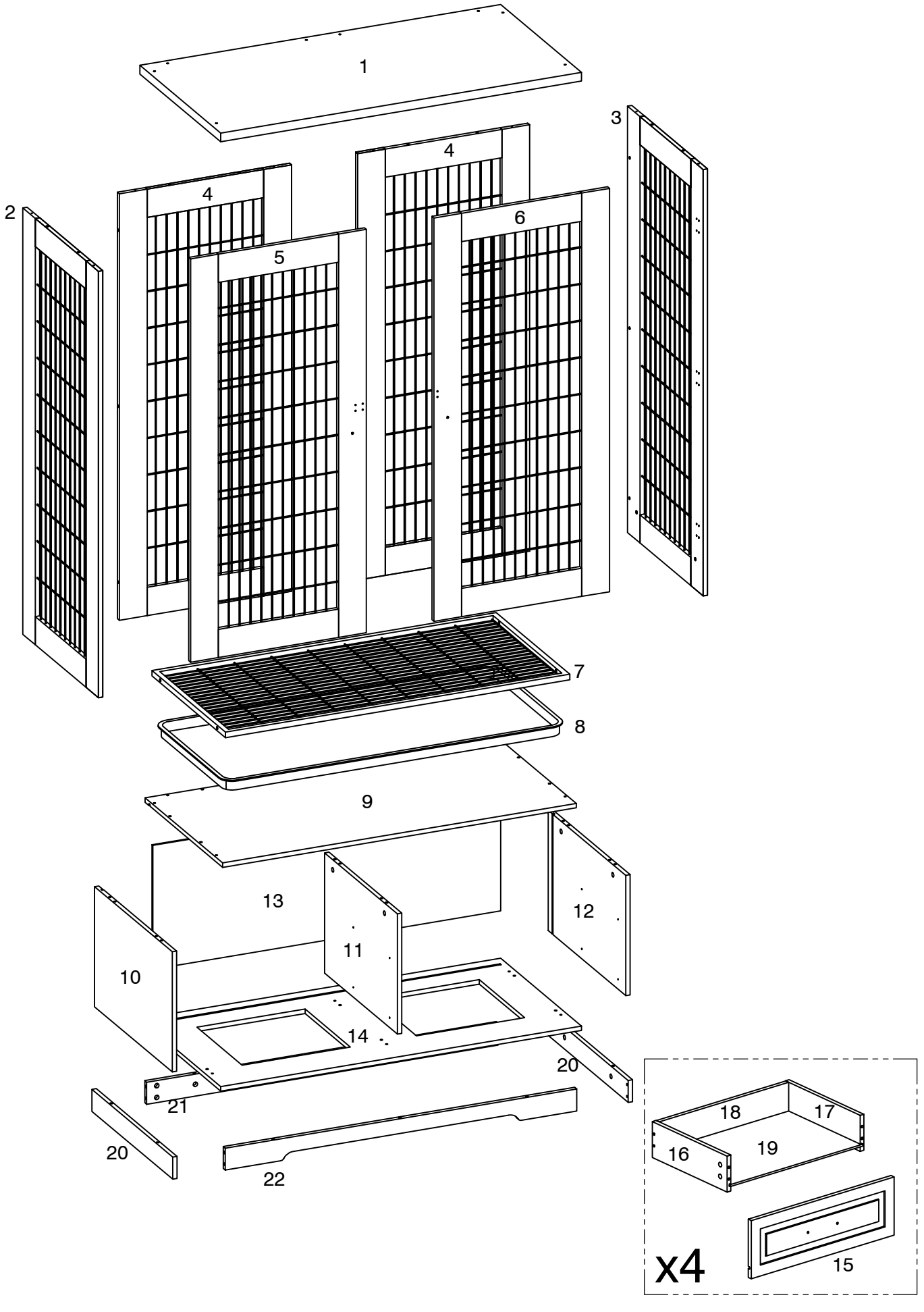

ASSEMBLY INSTRUCTION P3

A	B	C	D	E
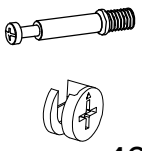 46pcs	 M4x12 90pcs	 M4x30 30pcs	 M4x16 10pcs	 Φ 6x30 28pcs
F	**G**	**H**	**J**	**K**
 4pcs	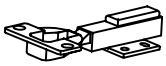 6pcs	 3pcs	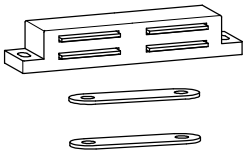 1pc	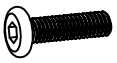 M6x23 4pcs
L	**M**	**N**	**P**	**S** M3x16 2pcs / **0** M3x12 4pcs
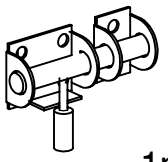 1pc	 M4x45 8pcs	 2pcs	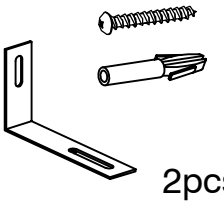 2pcs	
CR	**DR**	**DL**	**CL**	
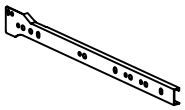 4pcs	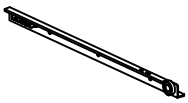 4pcs	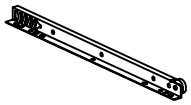 4pcs	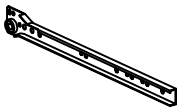 4pcs	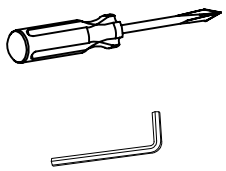

1

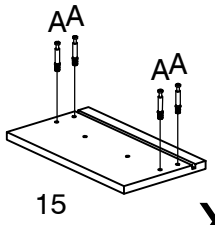

x4

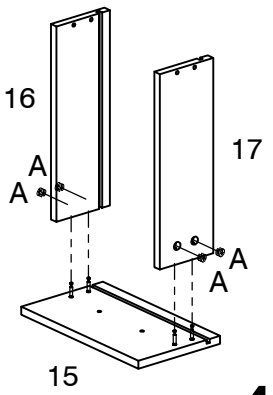

x4

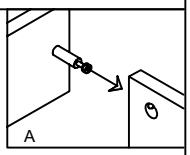

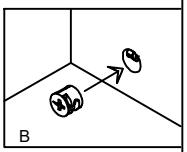

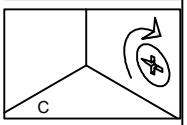

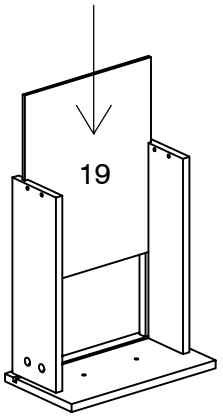

x4

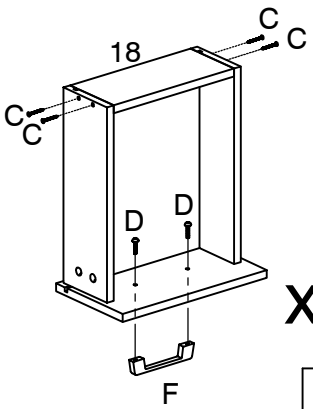

x4

D	x8

F	x4

C	x16

A	x16

A	x16

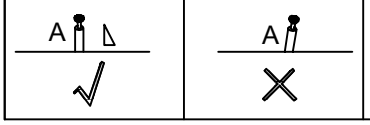

ASSEMBLY INSTRUCTION P4

2

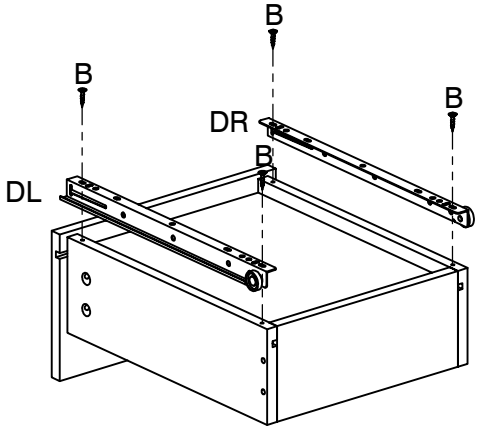

x4

	
DR	x4
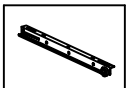	
DL	x4
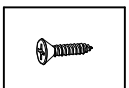	
B	x16

3

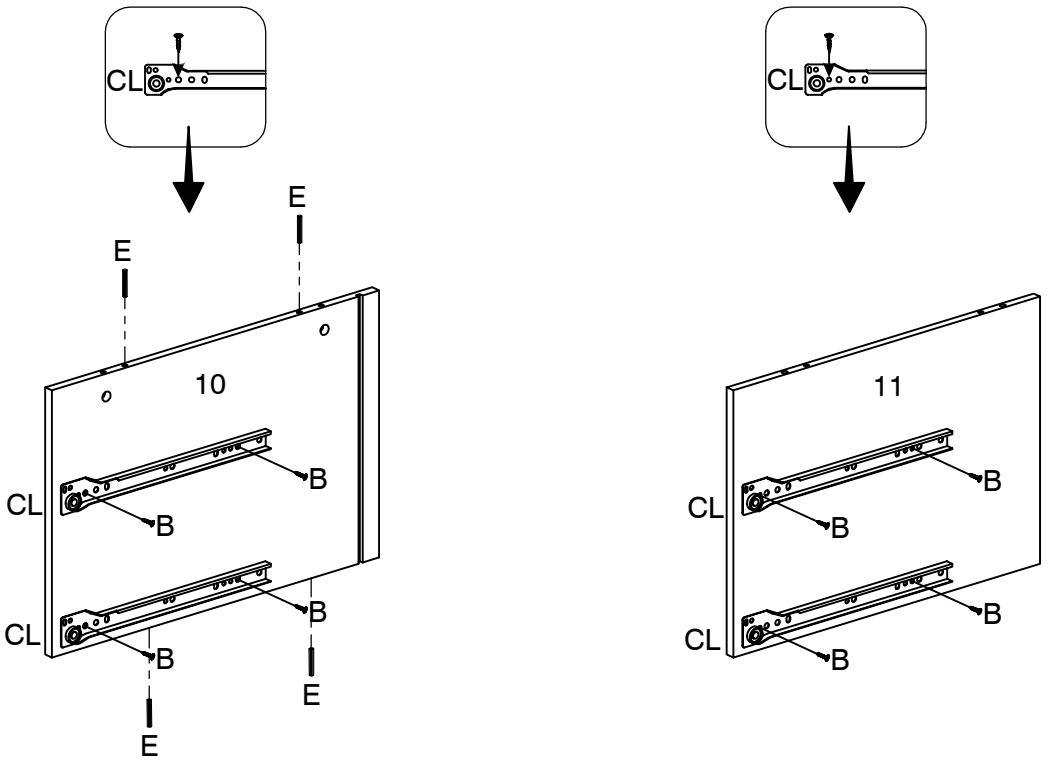

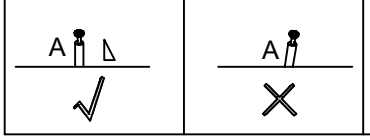

		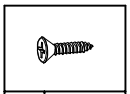		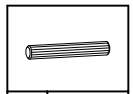	
CL	x4	B	x8	E	x4

ASSEMBLY INSTRUCTION P5

4

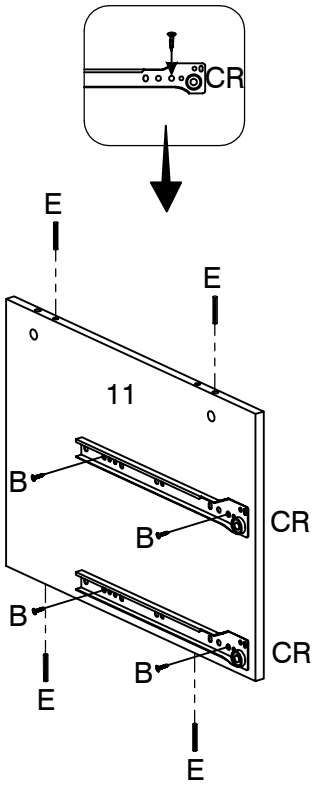

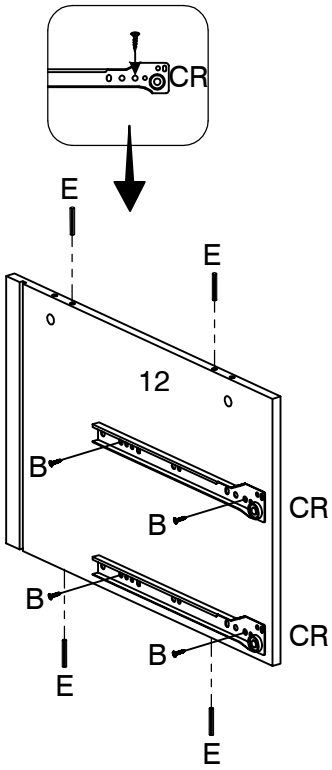

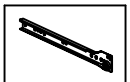	CR	x4		B	x8		E	x8

5

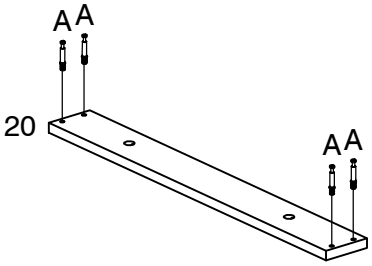

x2

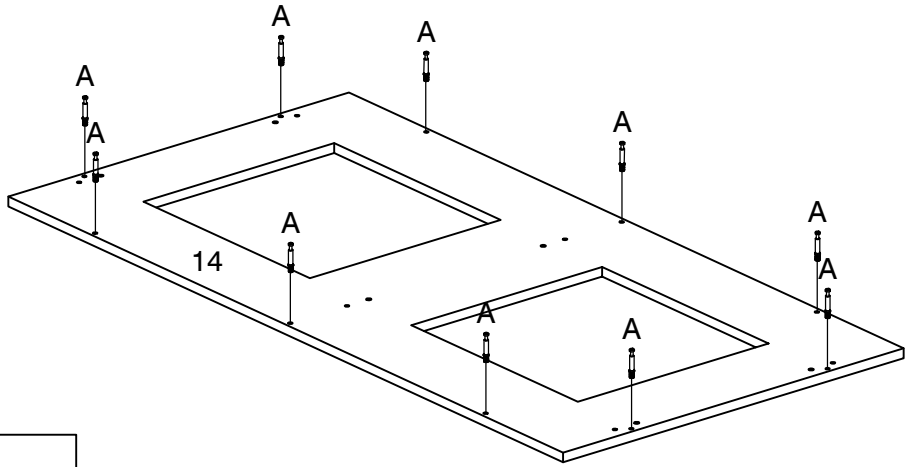

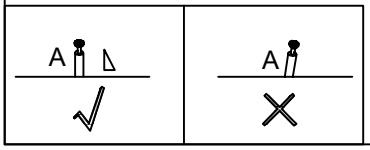

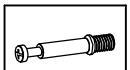	A	x18

6

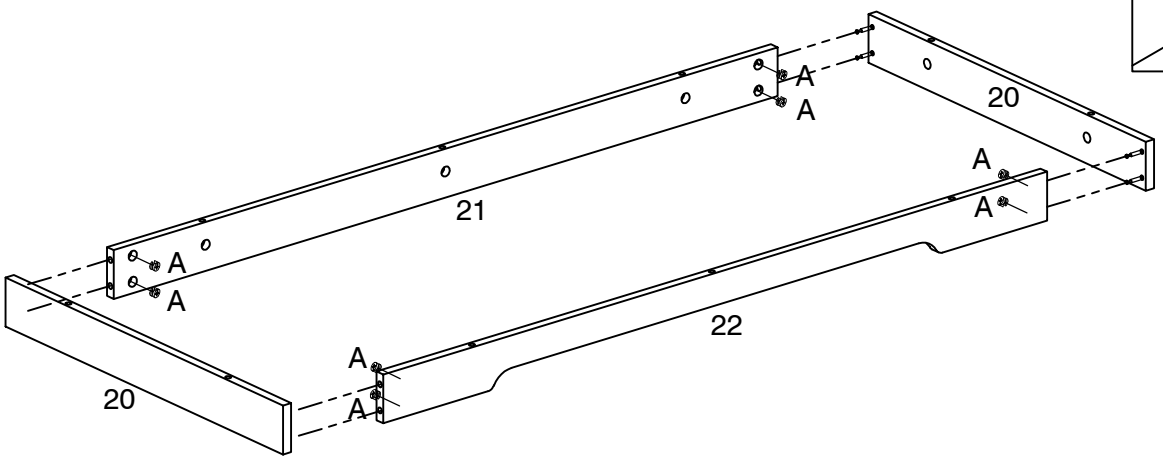

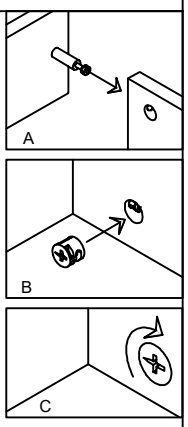

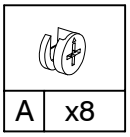

7

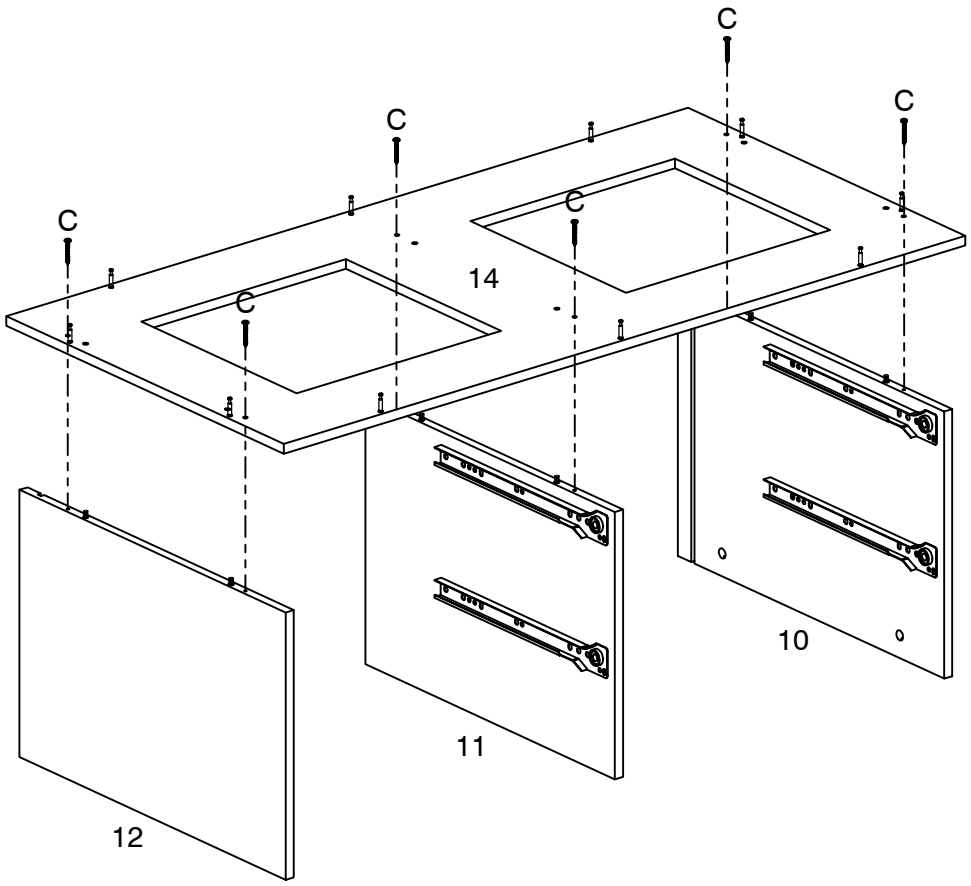

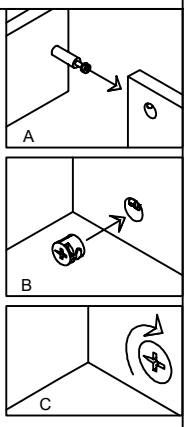

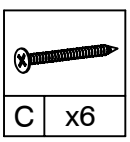

8

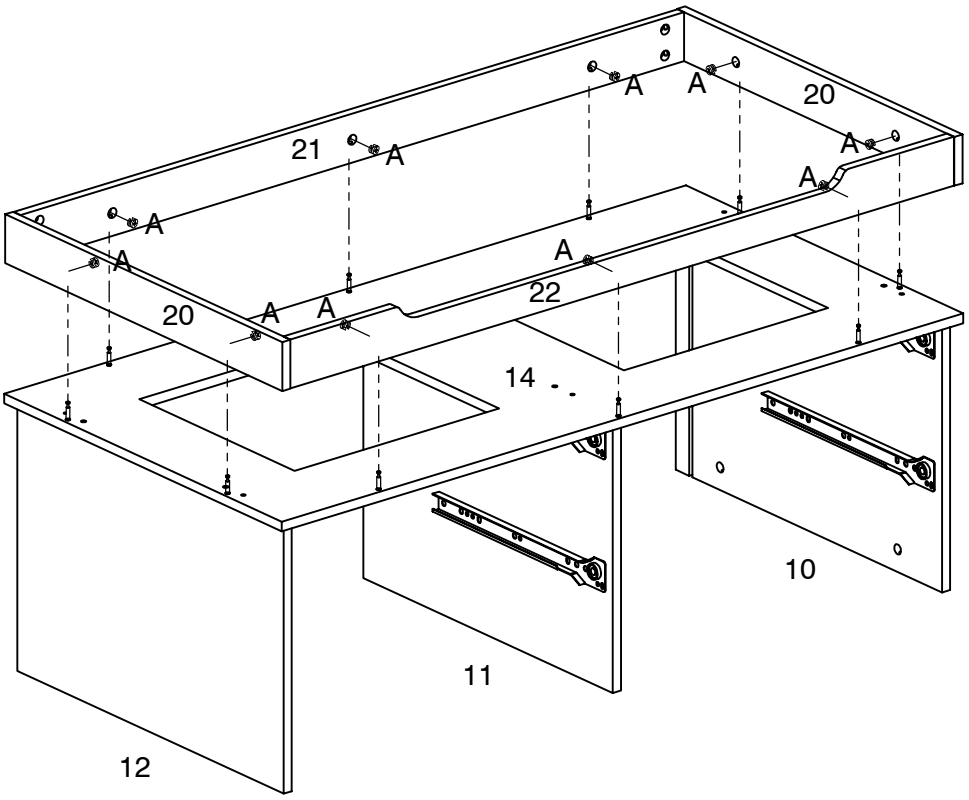

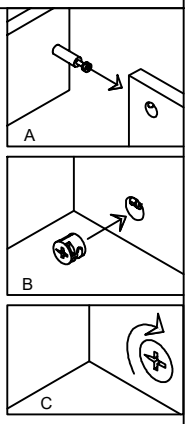

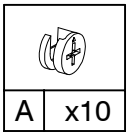

9

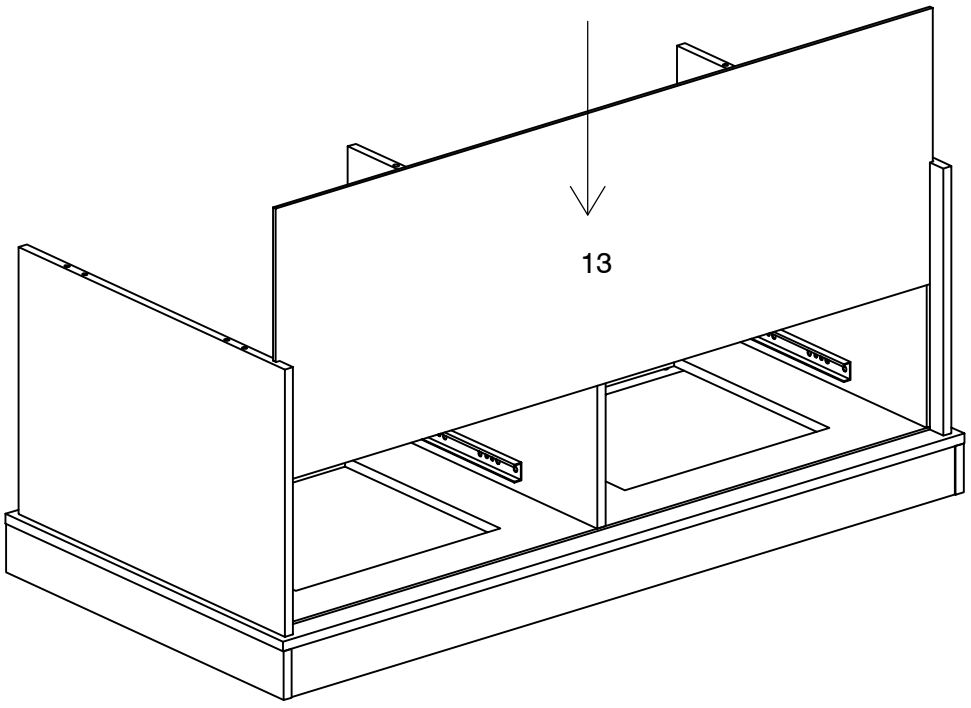

10

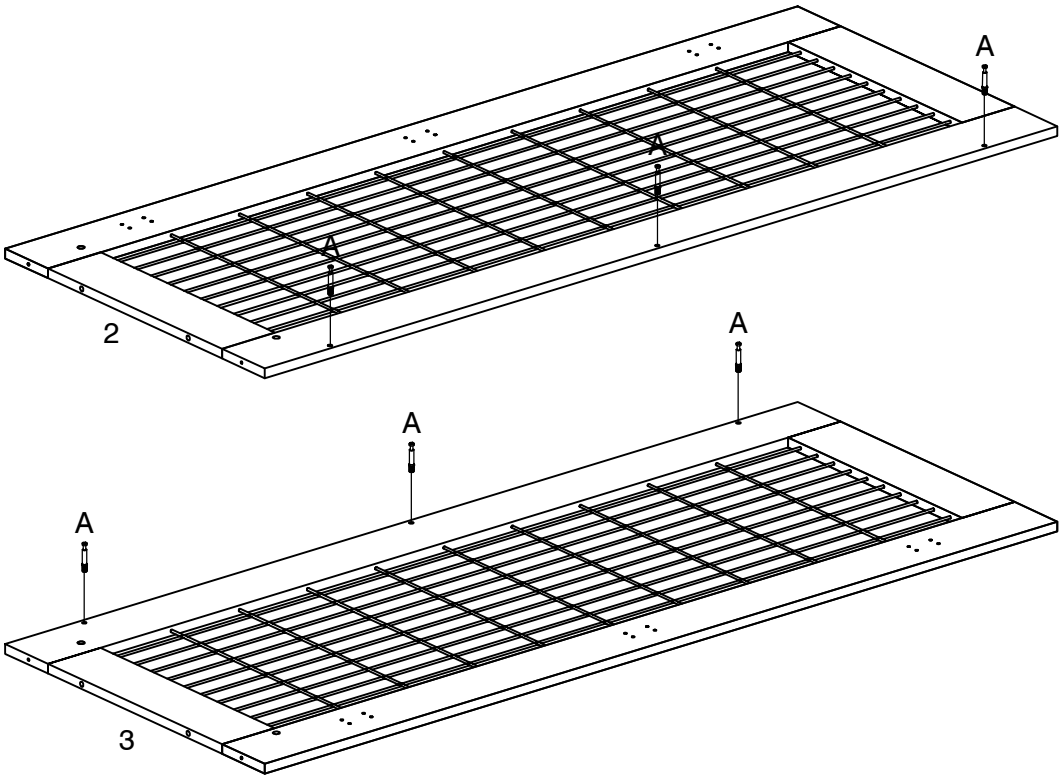

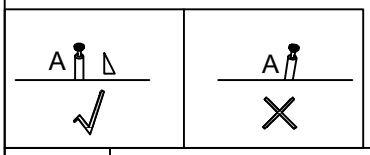

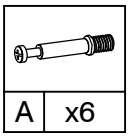

11

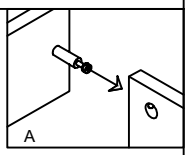

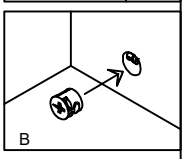

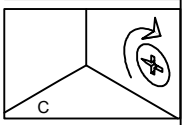

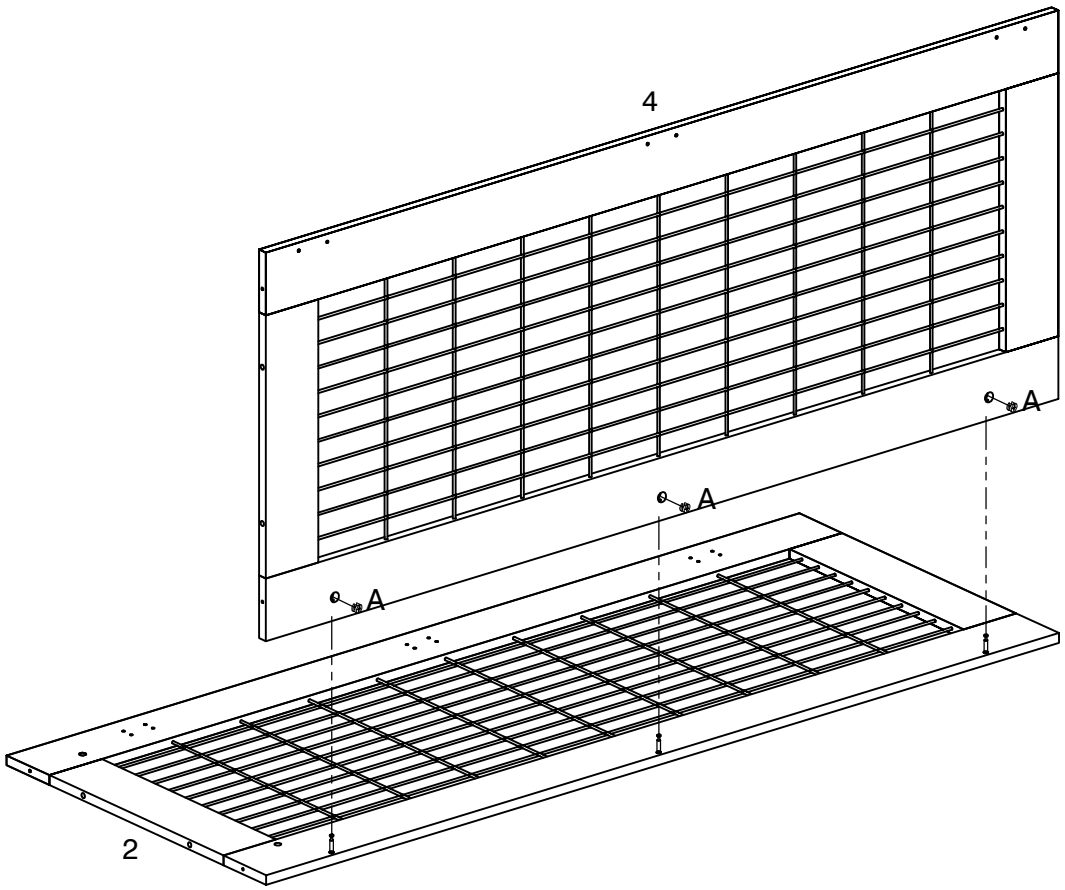

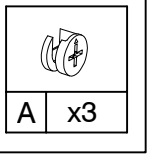

12

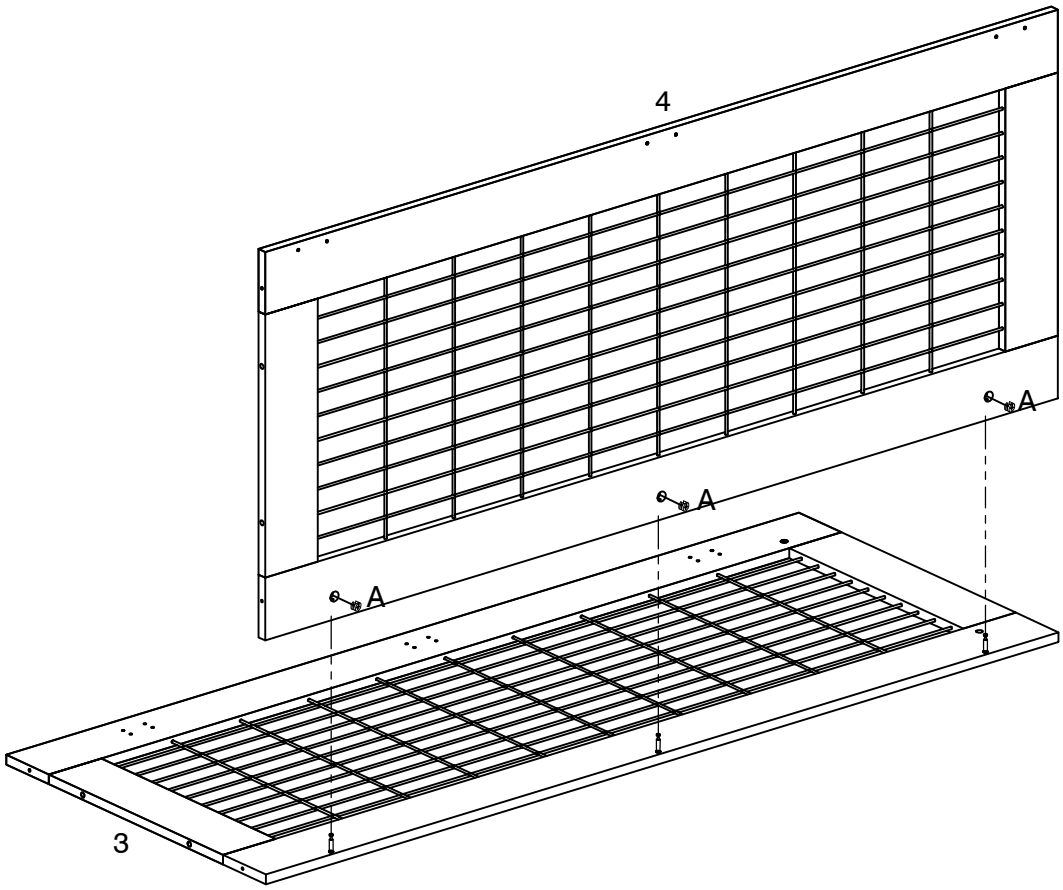

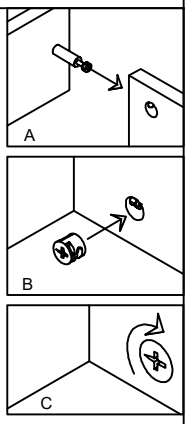

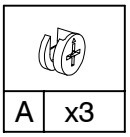

13

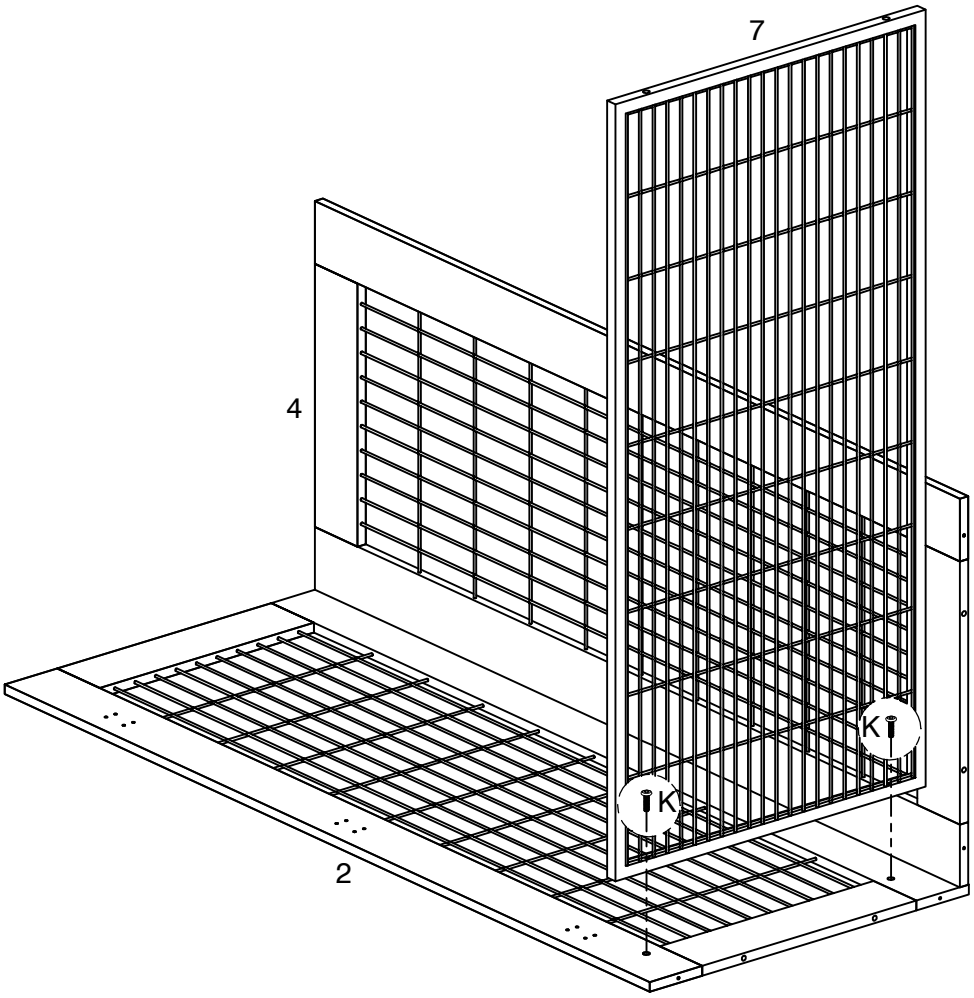

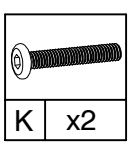

14

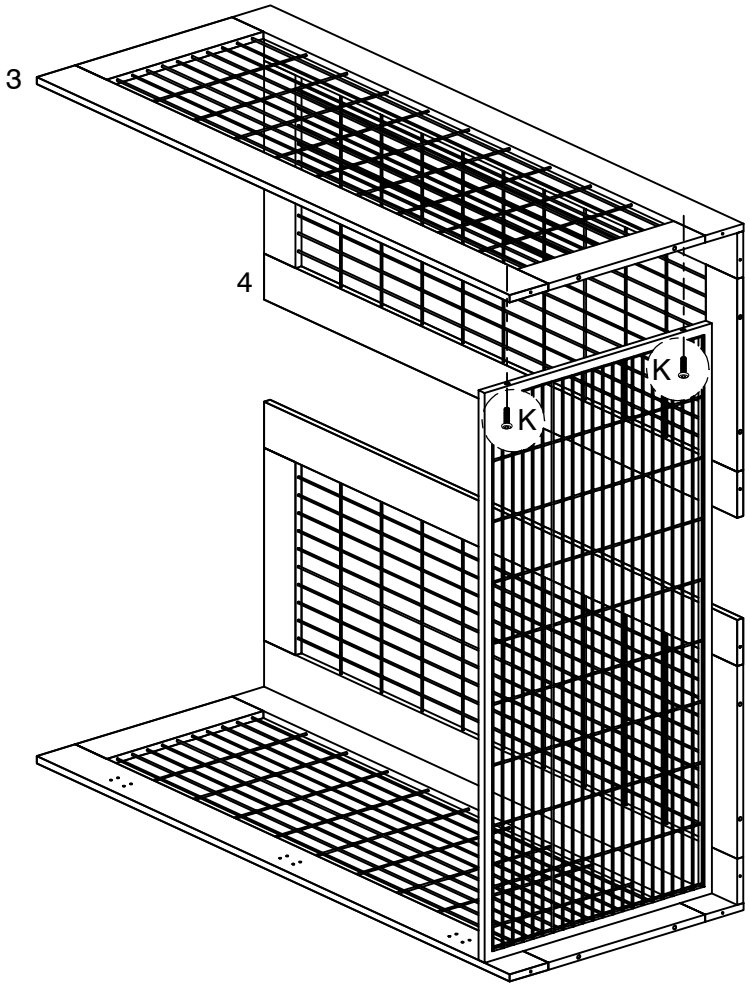

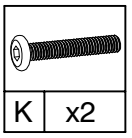

K	x2

15

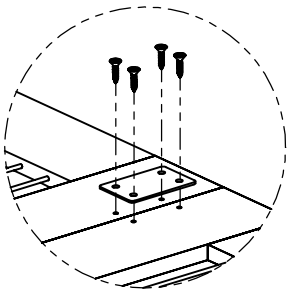

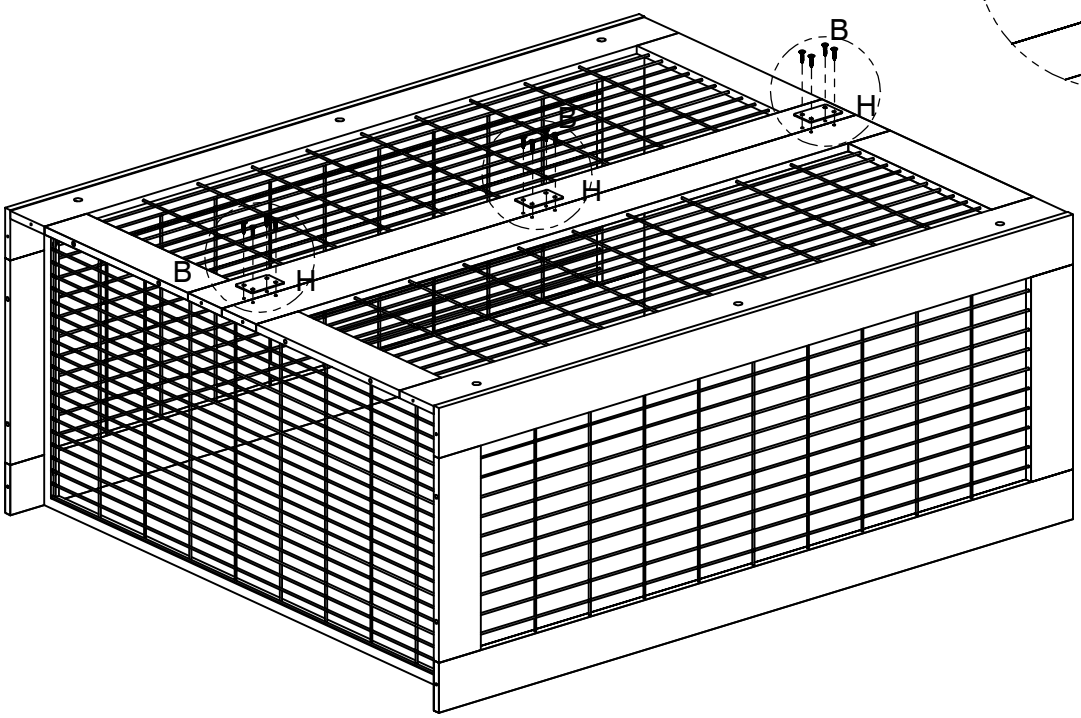

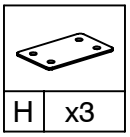

H	x3

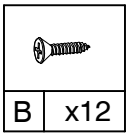

B	x12

16

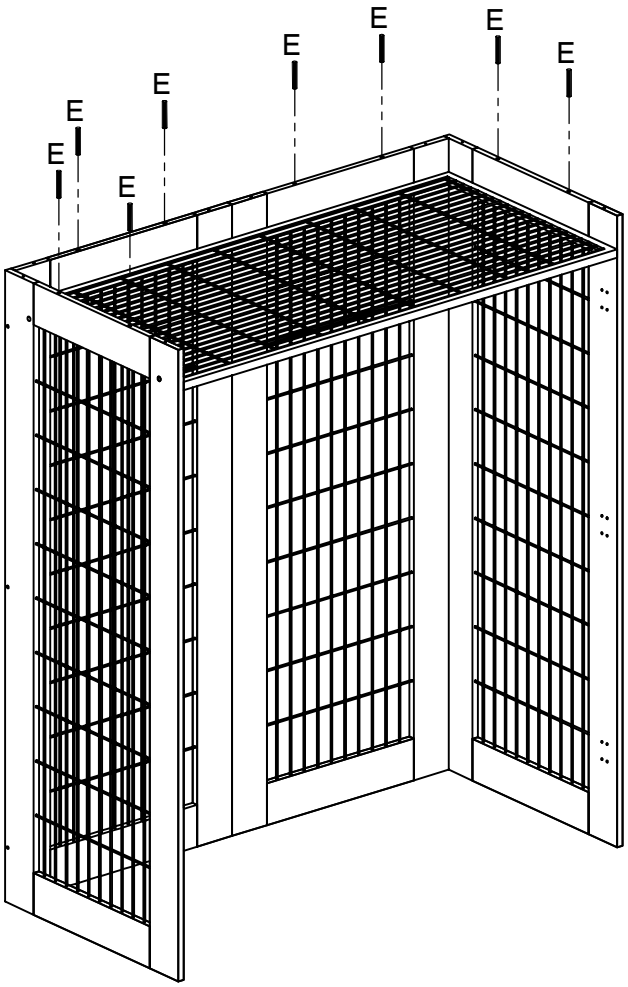

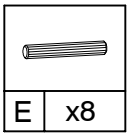

17

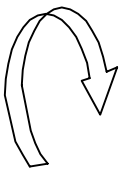

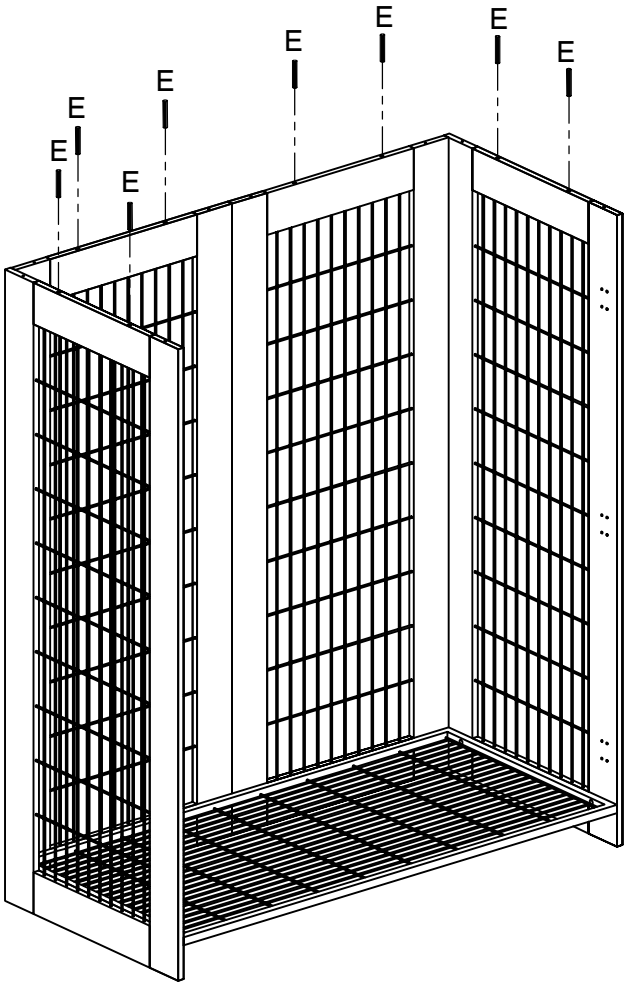

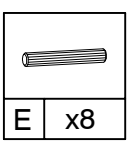

18

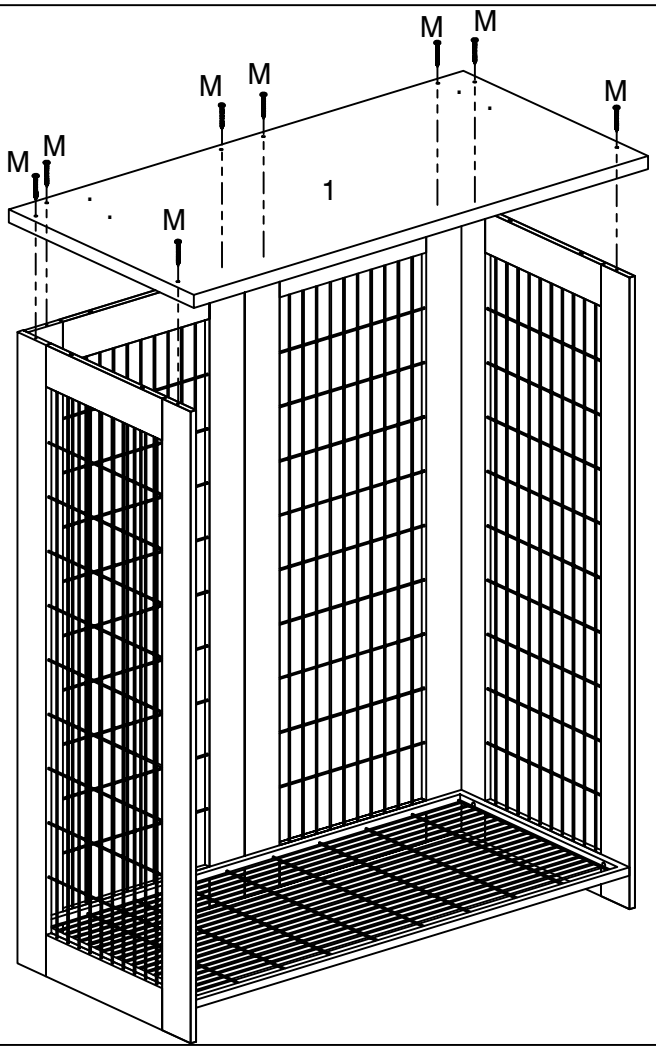

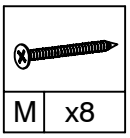

19

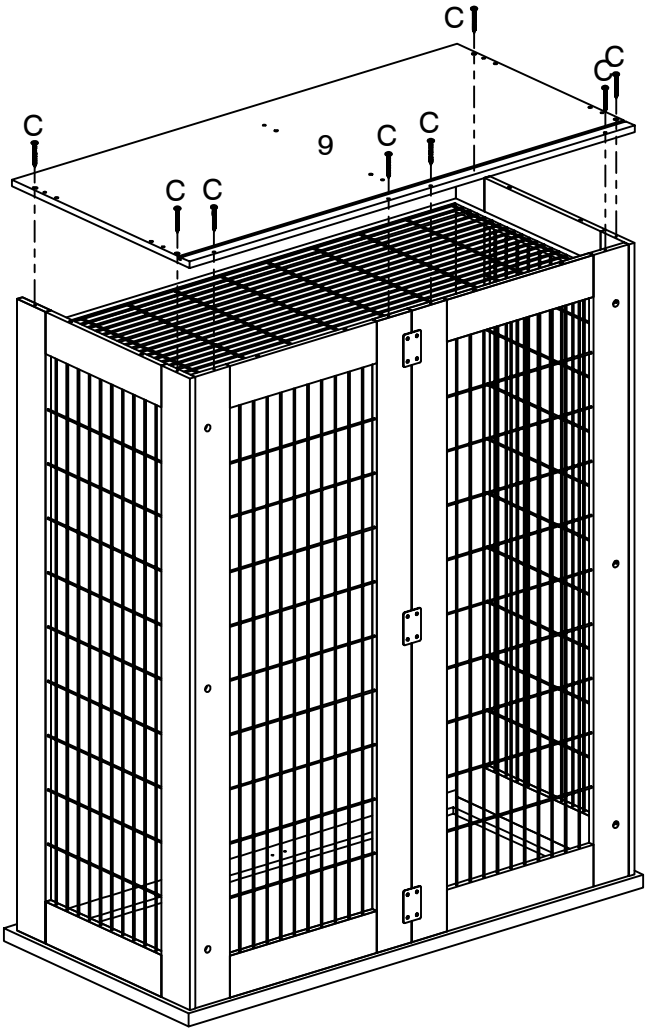

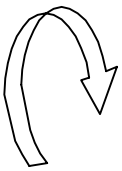

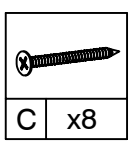

20

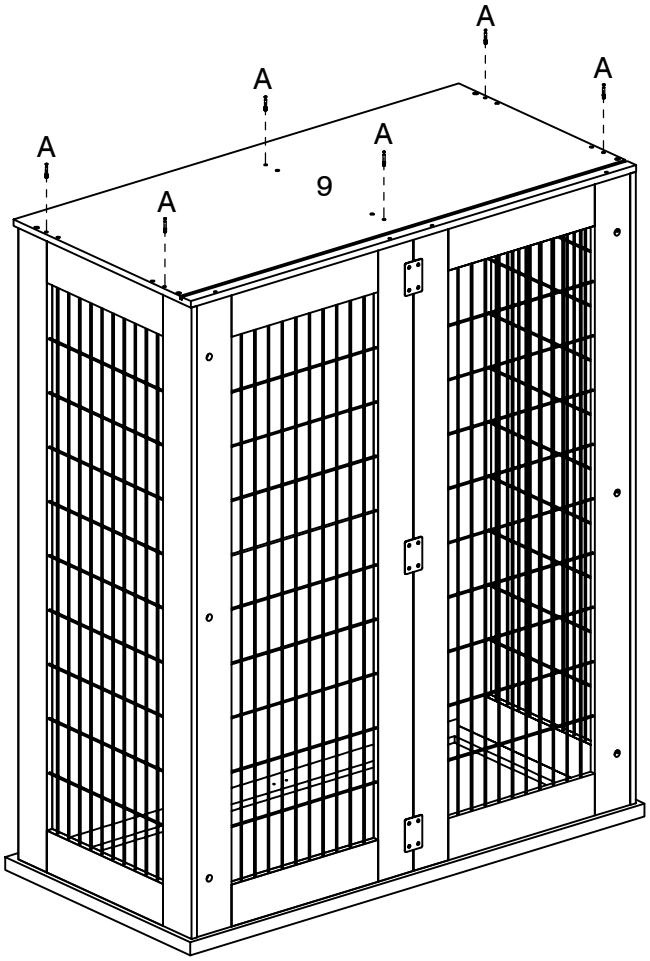

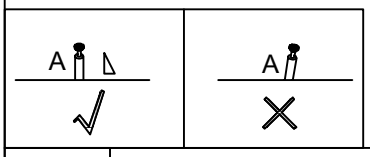

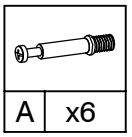

21

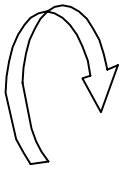

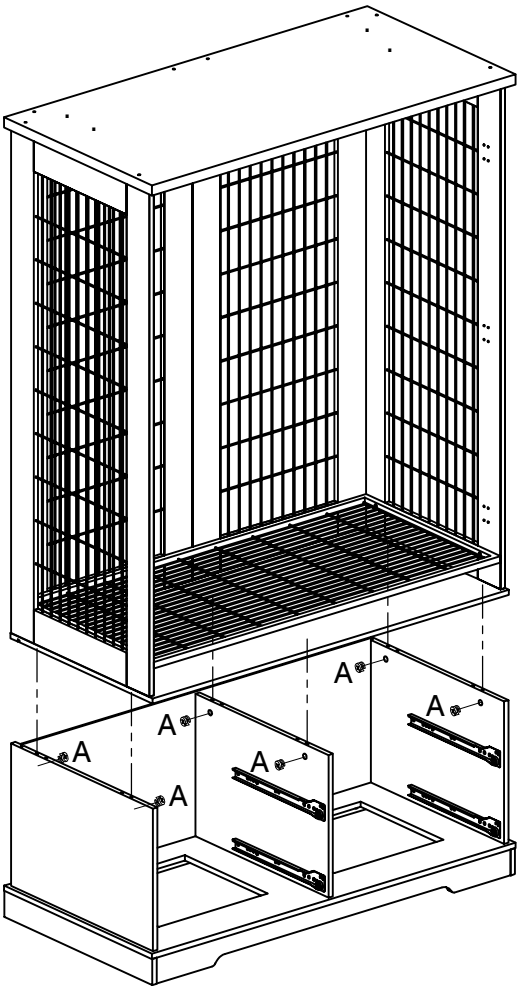

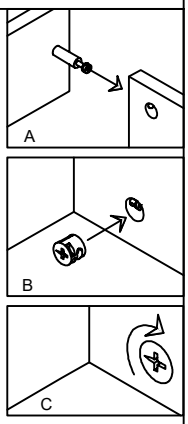

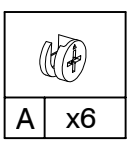

22

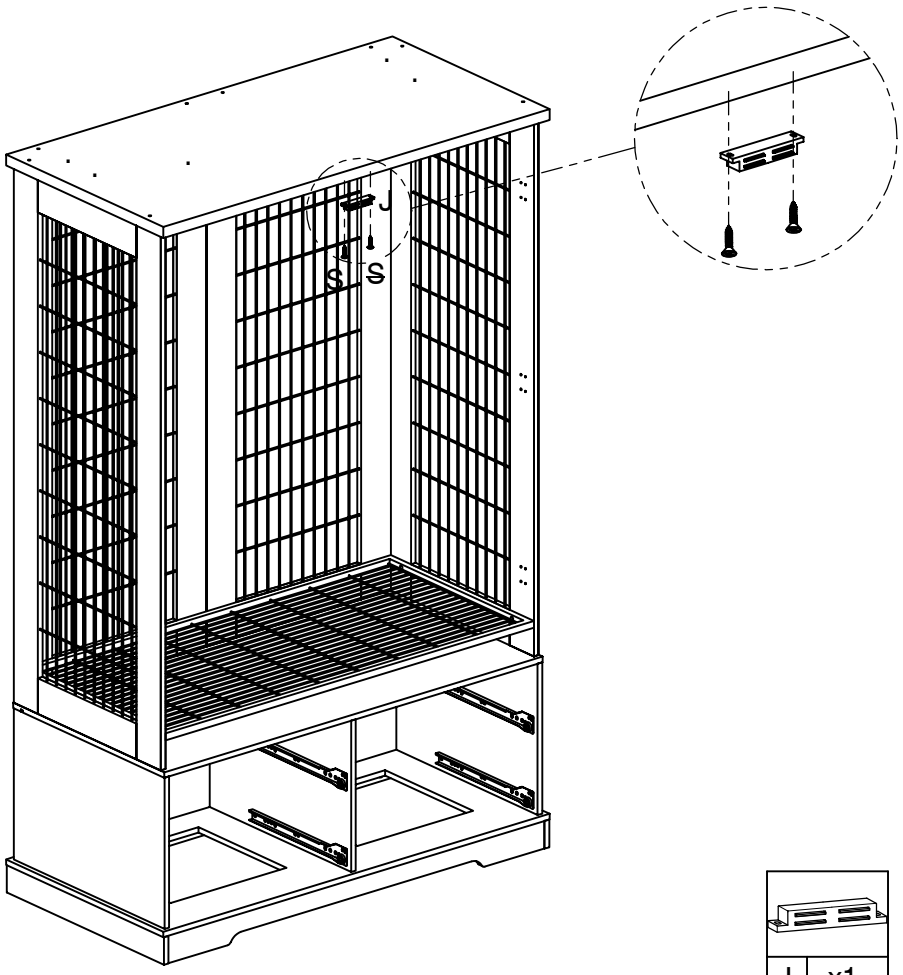

J	x1

S	x2

23

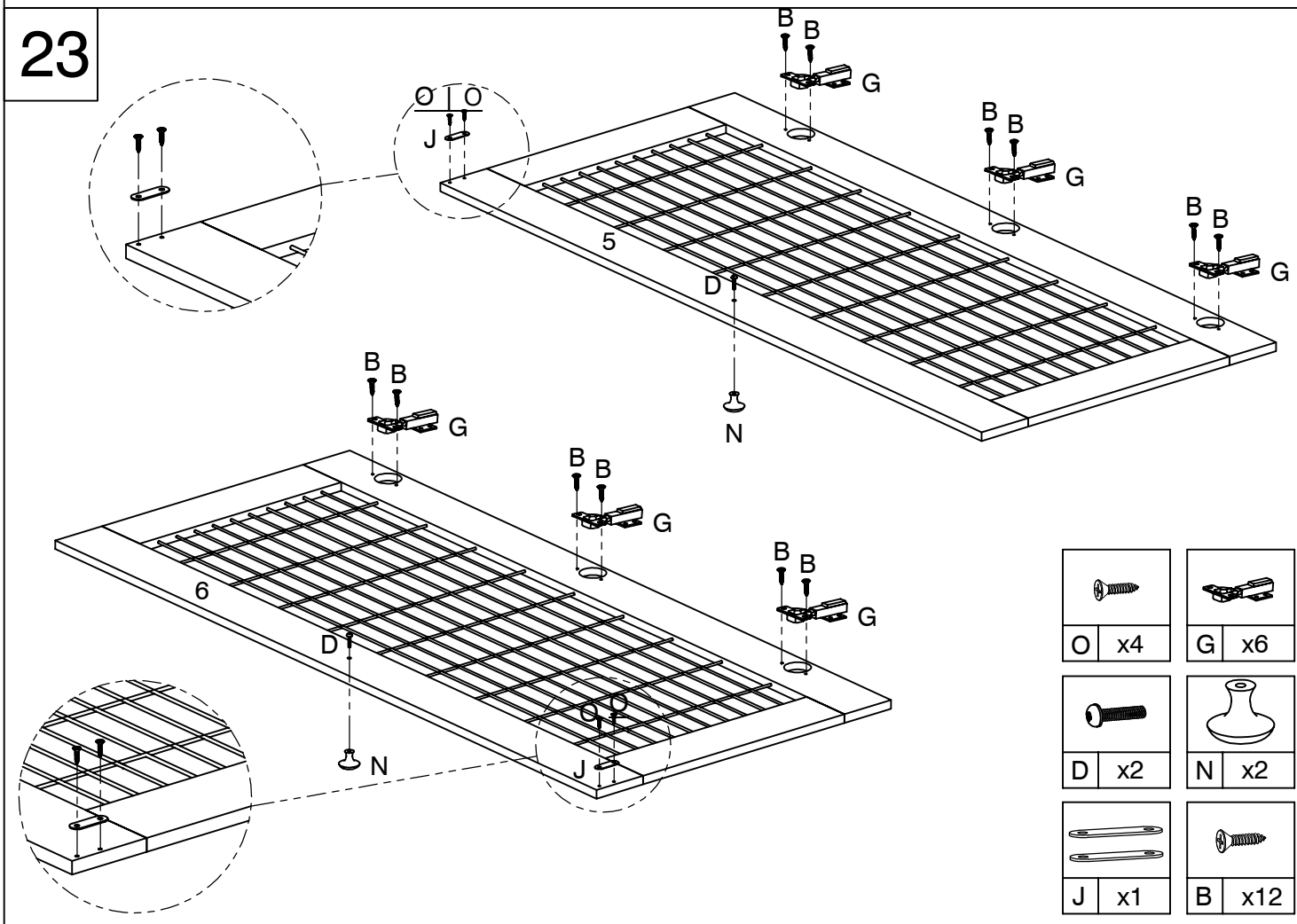

O	x4

G	x6

D	x2

N	x2

J	x1

B	x12

24

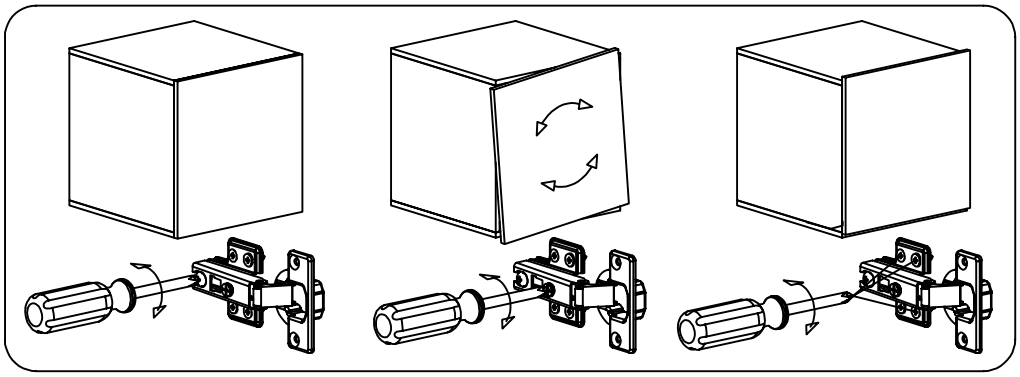

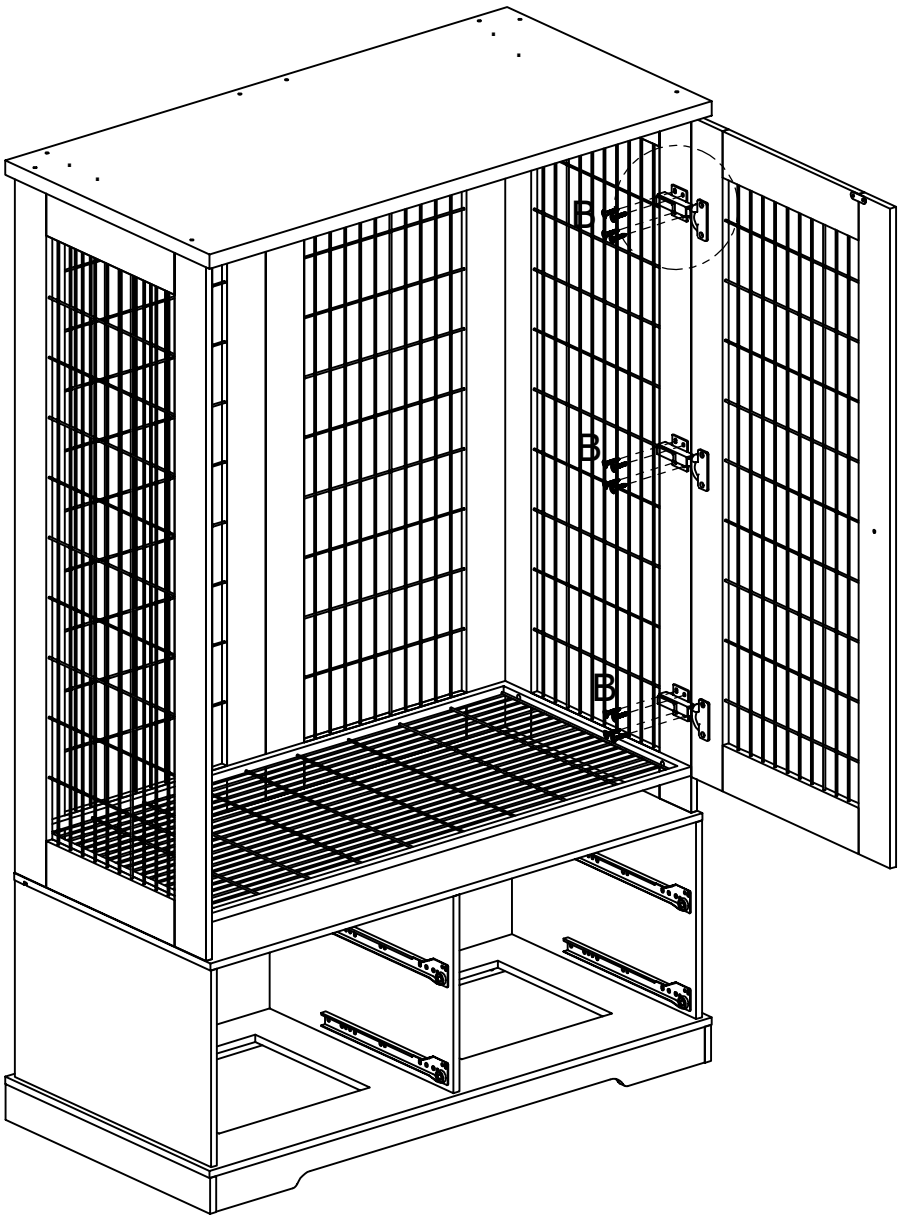

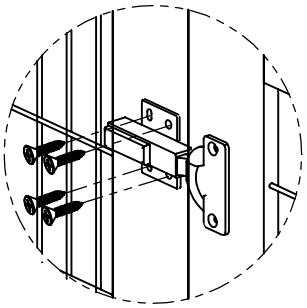

· 6

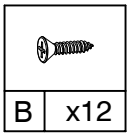

25

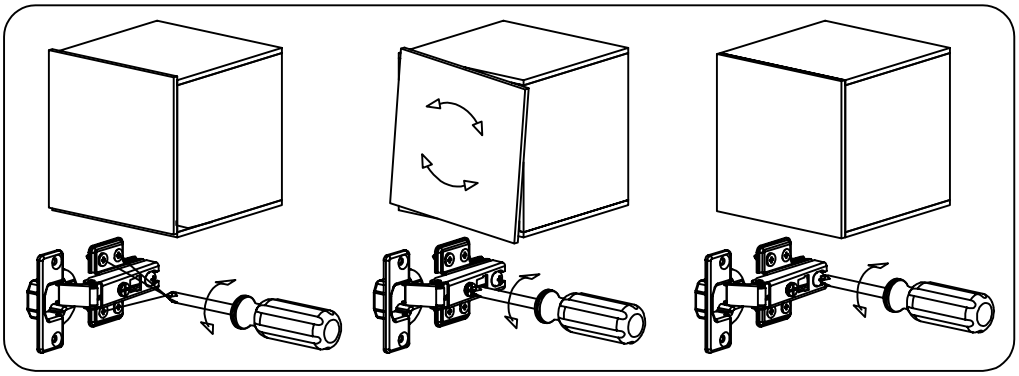

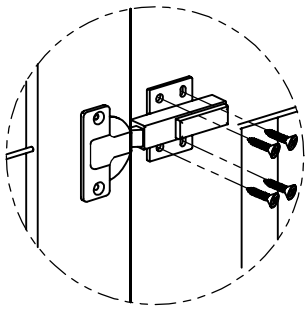

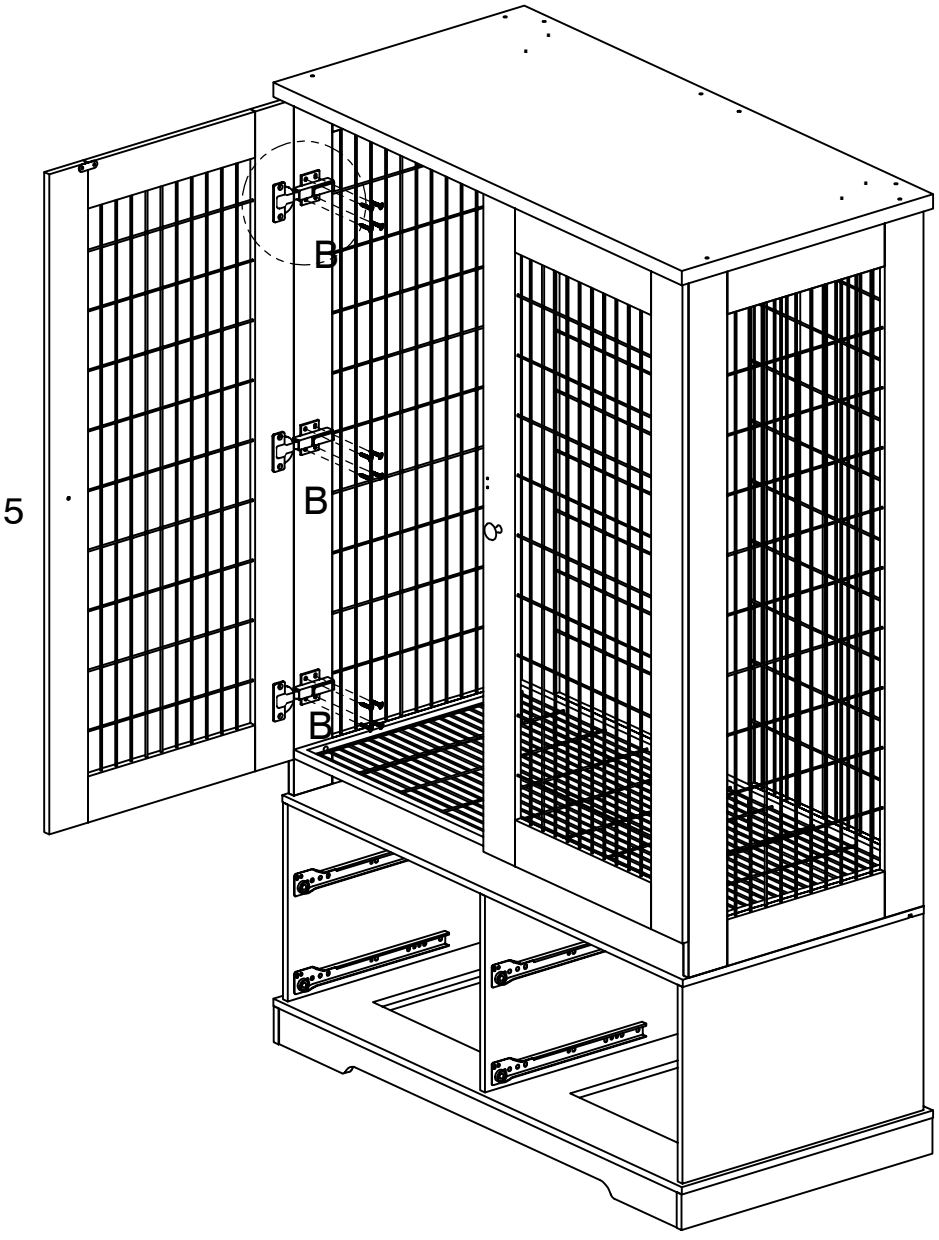

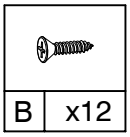

26

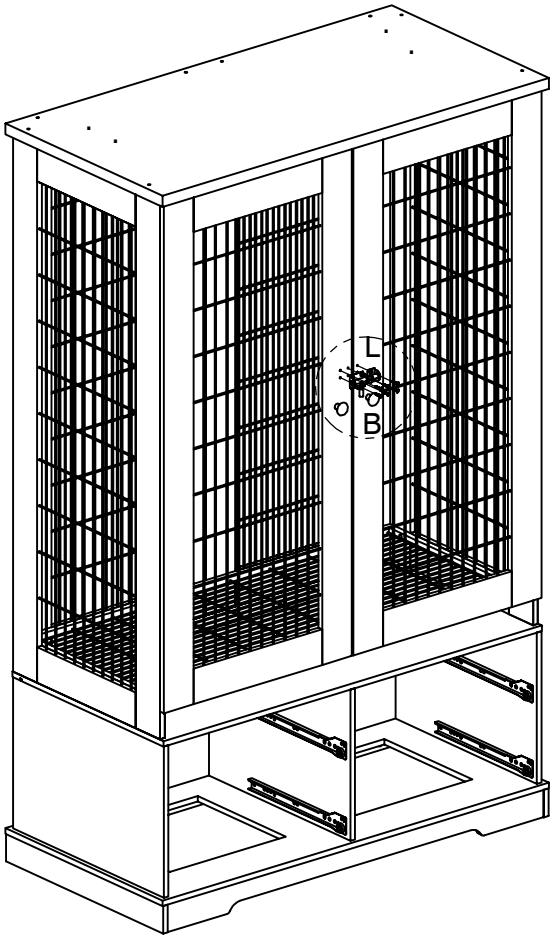

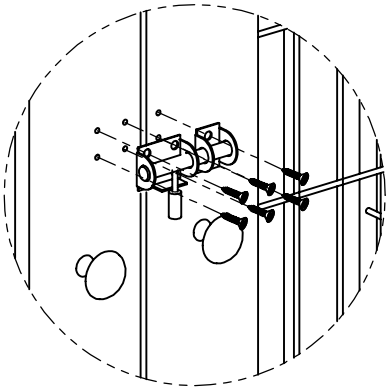

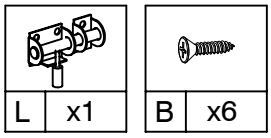

27

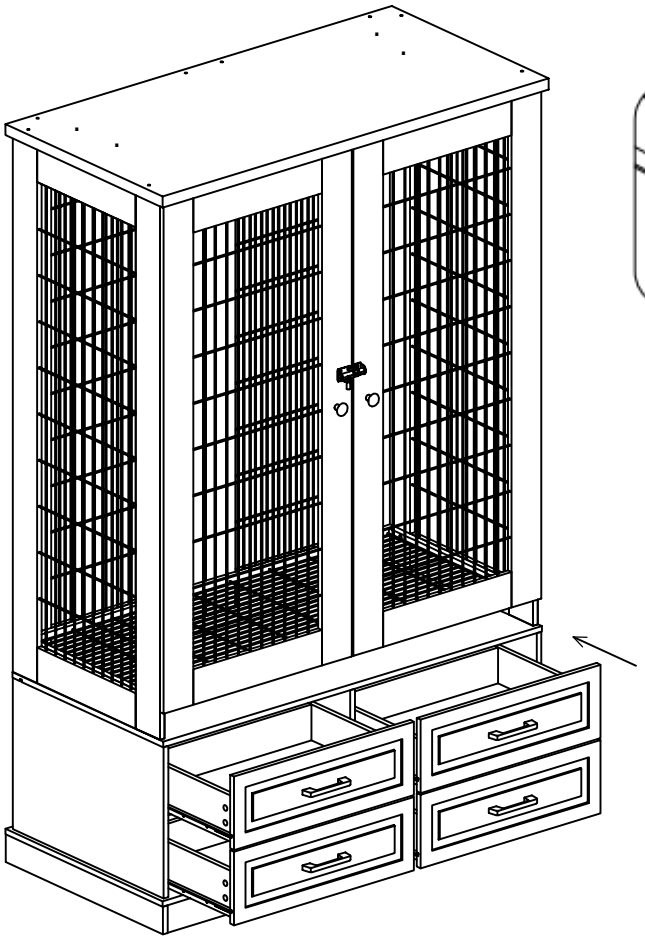

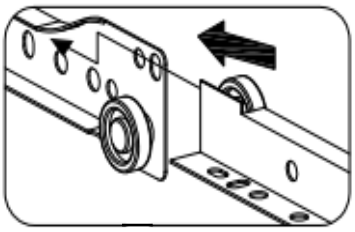

28

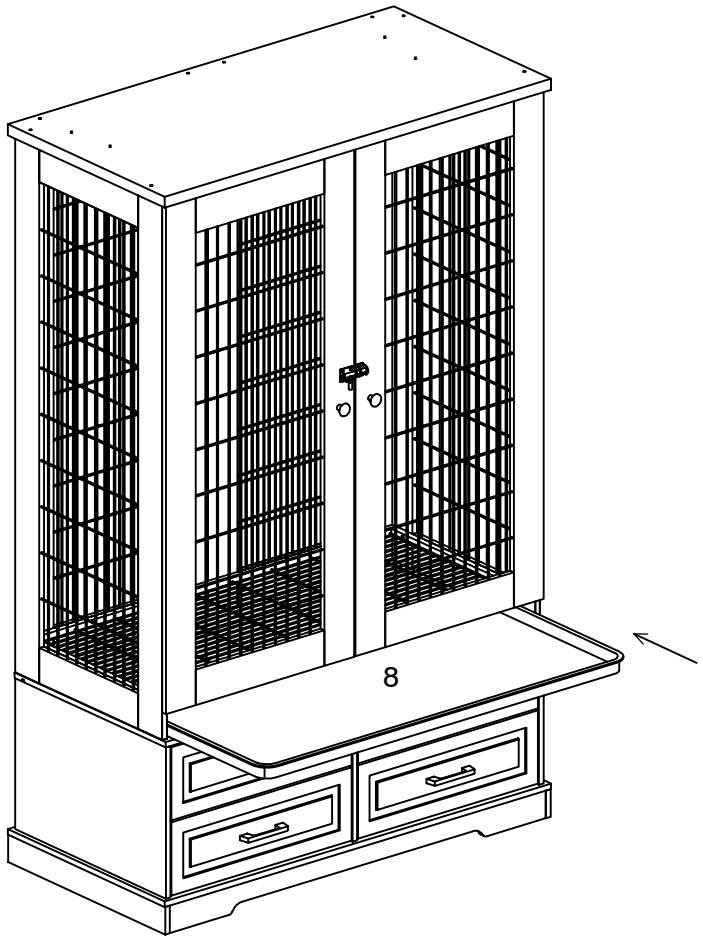

29

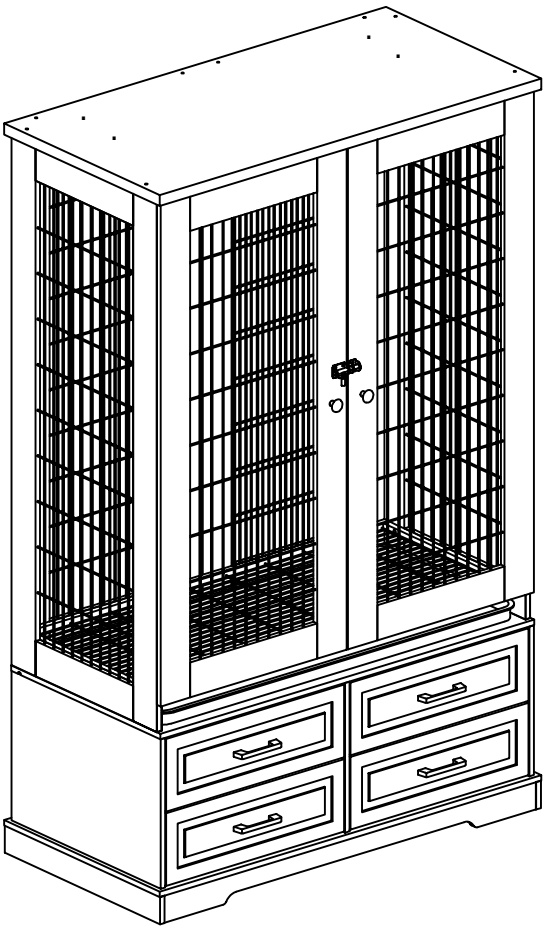

30

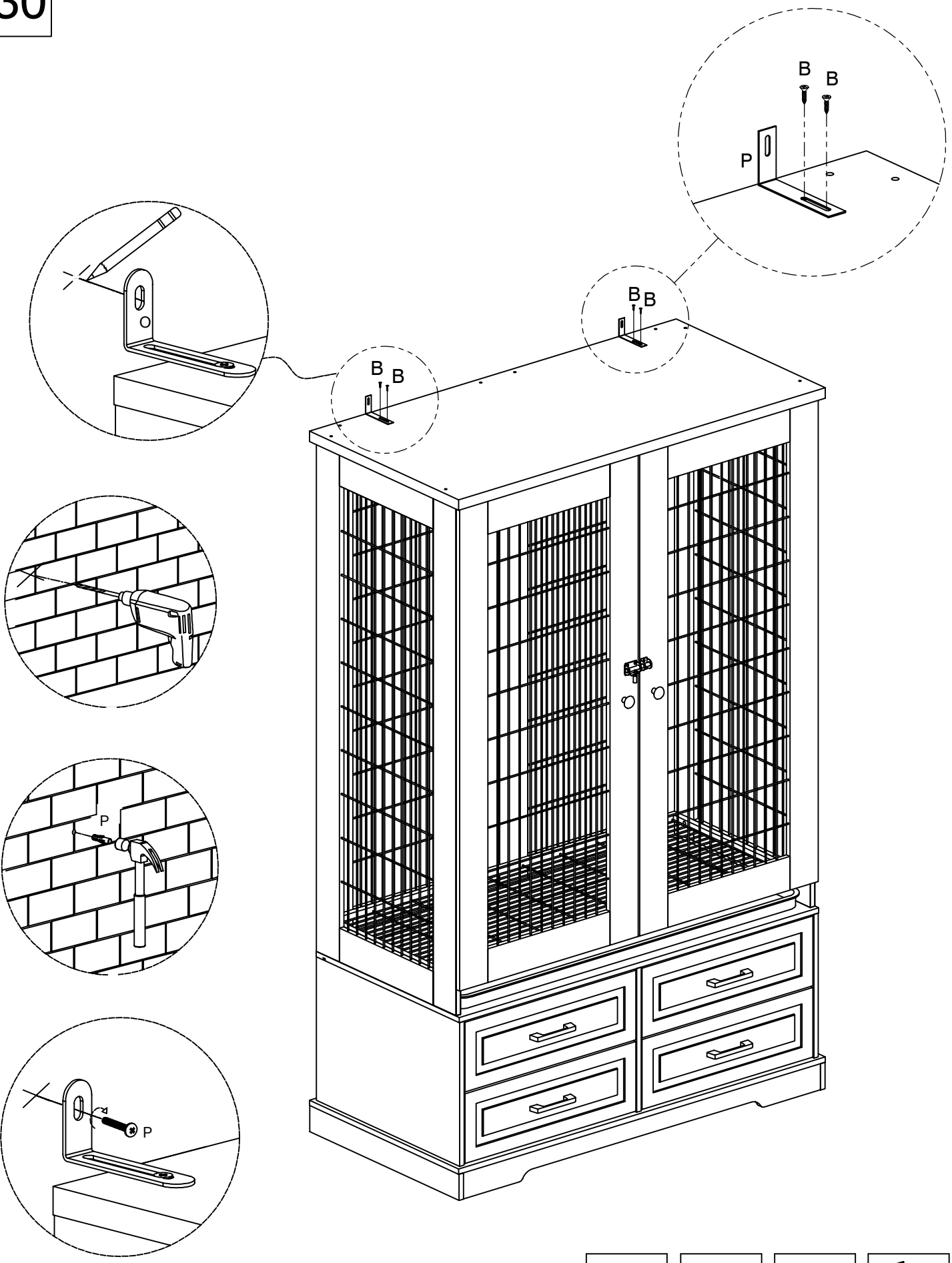

B	x4
P	x2
P	x2
P	x2