Outdoor Privacy Screen

BY0501

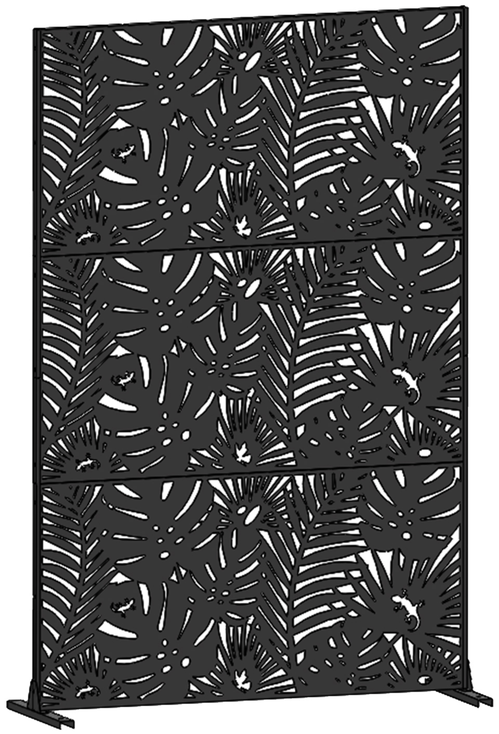

Before Assembling

If the privacy screen will be used in a strong wind area, we highly recommend you using four Hex-Head Sleeve Anchors to fix the privacy screen on solid ground.

Before assembling, we recommend:

1. Wear Gloves

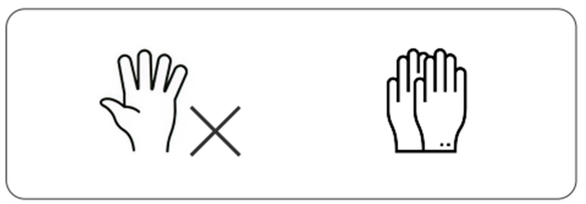

2. Assembling on a soft mat to prevent from scratch and scuf marks.

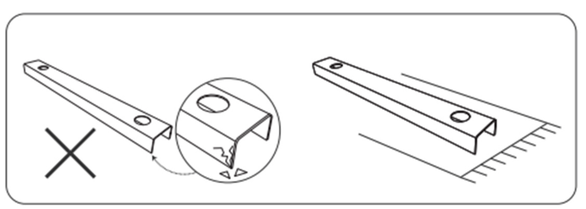

3. Ask for Helping Hand

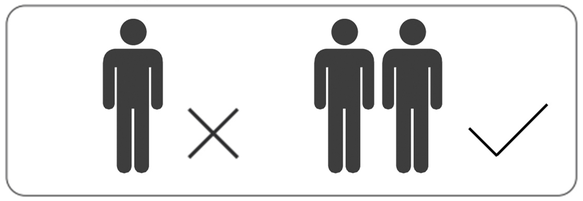

4. Use Hex-Head Sleeve Anchors to fix the privacy screen on solid ground if necessary.

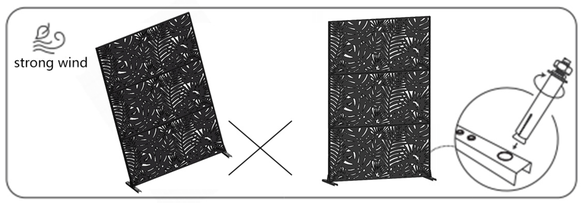

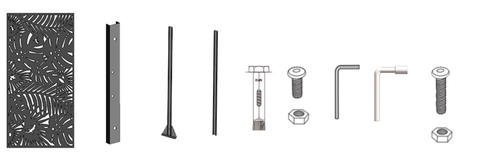

A	B	C	D	E	F	OPTIONAL		
3	2	2	2	4	30	1	1	3

1. Secure part C to base B using screw F.

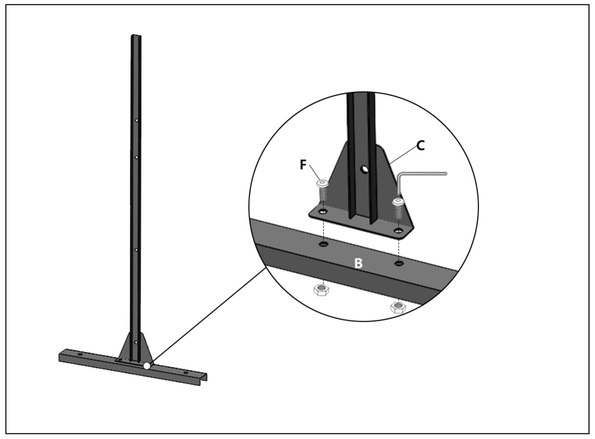

2. Use screw F to secure panel A and part C.

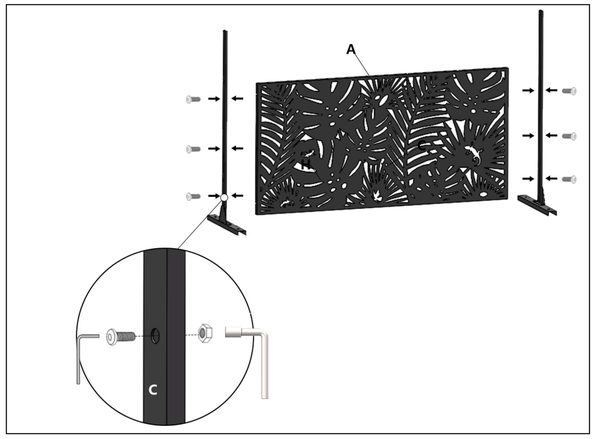

3. Secure the 2nd Panel A to the 1st Panel A and Part C using Screw F.

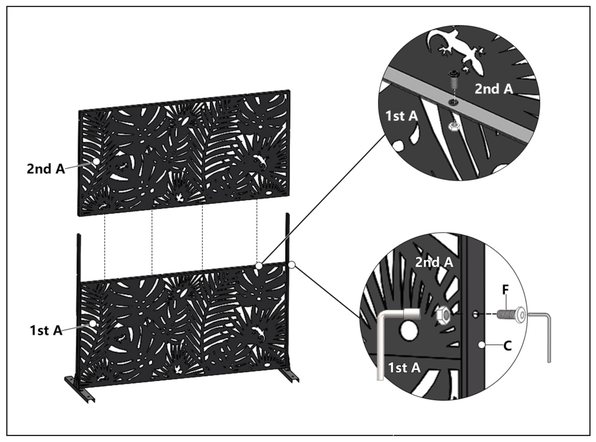

4. Use screw F to attach part D to the connection of part A.

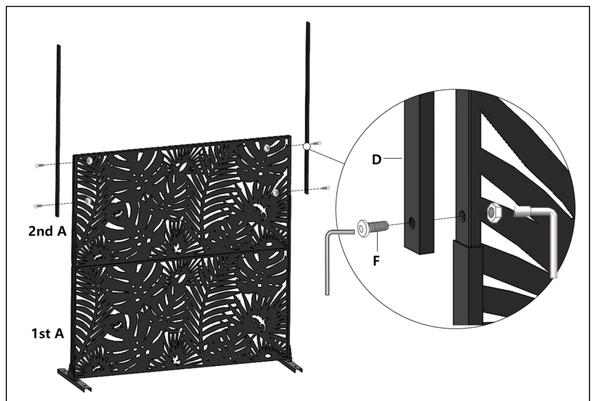

5. Secure the 3rd Panel A to the 2nd Panel A using Screw F, and connect part D to the connection of part A using Screw F.

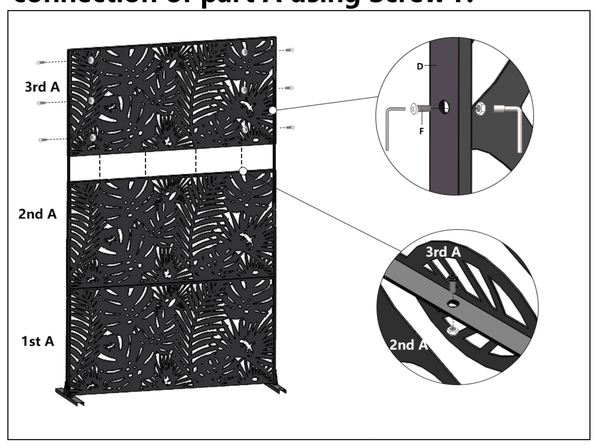

6. Use part E to fix base B on the ground.

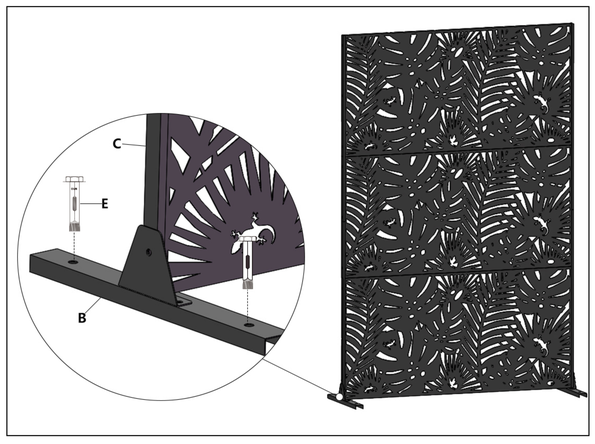

CONNECTING TWO UNITS (Optional)

INCLUDED HARDWARE

3x 

M6x20 Long Screws



Step 1:Position screens side-by-side.
Step 2: Remove screws at 3 chosen points.
Step 3: Connect using the 3x M6x20 Long Screws.

Note: Choose any 3 of the connection points.
Only 3 long screws are provided