SKU:H00099

THE BED
ASSEMBLY INSTRUCTIONS

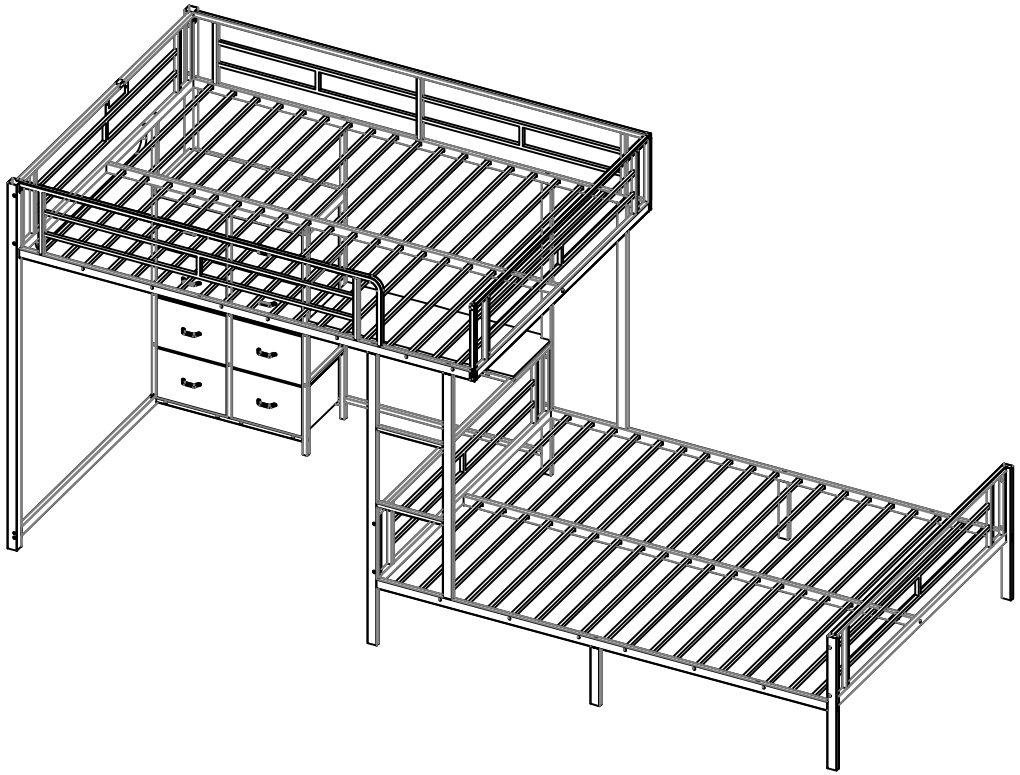

SAFETY WARNINGS AND GENERAL NOTES:

1. Follow the information on the warnings on the bunk bed end structure and on the carton. Do not remove the warning label from the bed.
2. Always use the recommended size mattress on mattress support, or both, to help prevent the likelihood of entrapment or falls.
3. Do not allow children under 6 years of age to use the upper bunk.
4. Periodically check and ensure the guardrail, ladder and other components are in their proper position, free from damage, and all connectors are tight.
5. Do not allow horseplay on or under beds.
6. Always prohibit jumping on the bed.
7. Prohibit more than one person on upper bunk.
8. Always use the ladder for entering and leaving the upper bunk.
9. Do not use substitute parts. Contact the manufacturer or dealer for replacement parts.
10. Use of a night-tight may provide added safety precaution for a child using the upper bunk.
11. Always use guardrails on both long sides of the upper bunk.
12. If the bunk bed will be placed next to a wall, the guardrail that runs the full length of the bed should be placed against the wall to prevent entrapment between the bed and the wall.
The use of water or sleep flotation mattresses is prohibited.
13. **STRANGULATION HAZARD**-Never attach or hang items to any part of the bunk bed that are not designed for use with the bed; for example, but not limited to, hooks, belts and jump ropes.
14. Keep these instructions for future reference.
15. We recommend assembling your bunk bed on the shipping carton to protect your floor or carpet.
16. Be certain all staples are out of the box before beginning assembly on the shipping carton.
17. USE ONLY MATTRESSES WHICH ARE AS THE TABLE BELOW ON UPPER AND ON LOWER BUNKS.

Down bed

Mattress type	Length	Width	Thickness
FULL Standard	74”-75”	53-54"	8”

Up bed (bunk bed and tribed included)

Mattress size	Length	Width	Thickness
FULL Standard	74"-75"	53-54"	6"max

18. SURFACE OF MATTRESS MUST BE AT LEAST 5"(127MM) BELOW THE UPPER EDGE OF GUARDRAILS.
19. Replacement Parts:
Replacement Parts, including additional guardrails, may be obtained from any of our （Shenzhen Yuefeng Zhiqi Technology Co., Ltd） dealers.

Bed parts view

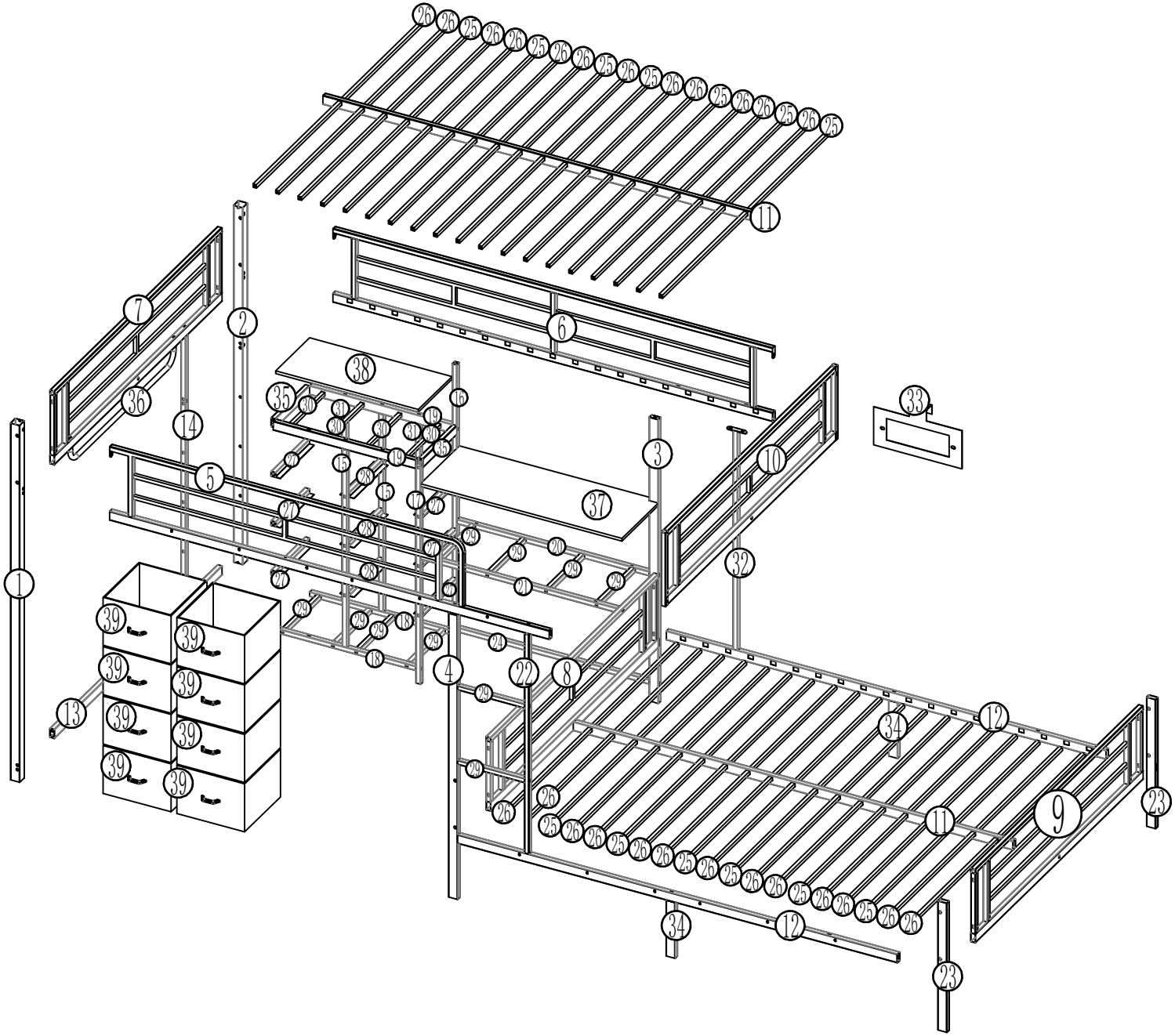

Part List

 1-1pcs	 2-1pcs	 3-1pcs	 4-1pcs	 5-1pcs	 6-1pcs	 7-1pcs
 8-1pcs	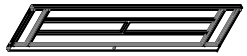 9-1pcs	 10-1pcs	11-2pcs	12-2pcs	13-1pcs	14-1pcs
 15-2pcs	16-1pcs	17-1pcs	18-2pcs	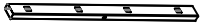 19-2pcs	20-1pcs	21-1pcs
 22-1pcs	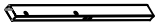 23-2pcs	 24-1pcs	25-13pcs	26-25pcs	 27-6pcs	 28-3pcs
 29-10pcs	 30-4pcs	31-2pcs	32-1pcs	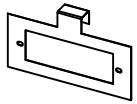 33-1pcs	 34-2pcs	 35-2pcs
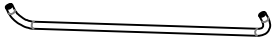 36-1pcs	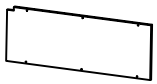 37-1pcs	 38-1pcs	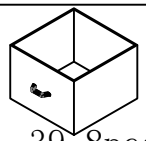 39-8pcs			

Hardware List

 V M4*10 2PCS	C 8*35 73PCS	D 8*55 48PCS	E 6*25 26PCS	F 8*18 19PCS	B M8*18 1PCS	K 76PCS	R M4*25 6PCS	M M4 2PCS	O 1PCS	A M4*10 16PCS	L M8=2PCS M6=1PCS	M 1PCS	1PCS	1PCS	P 8PCS

Step 1

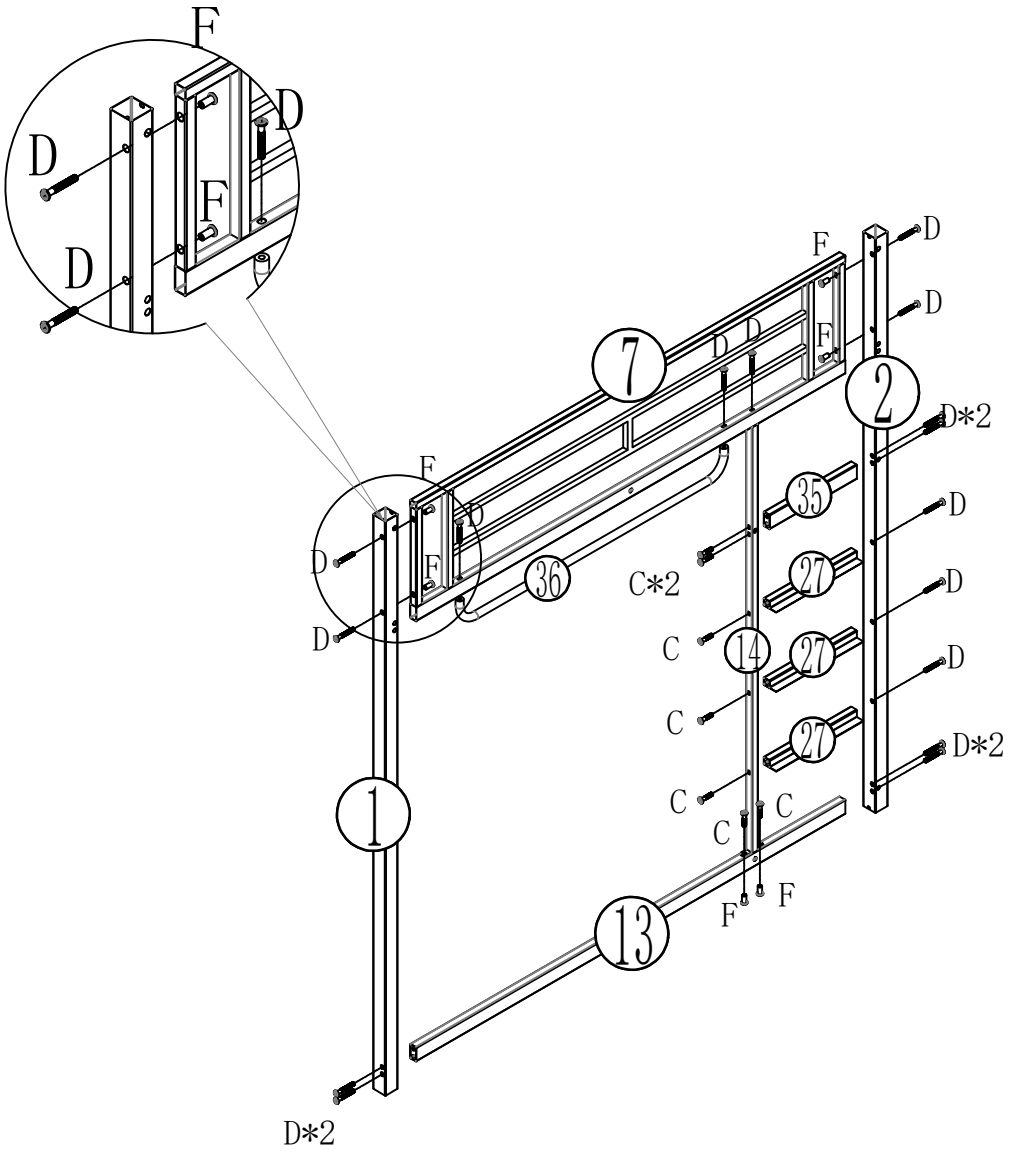
F
D
D
F
D
F
D
D
F
D
D
D
F
D
D
D

Step 3

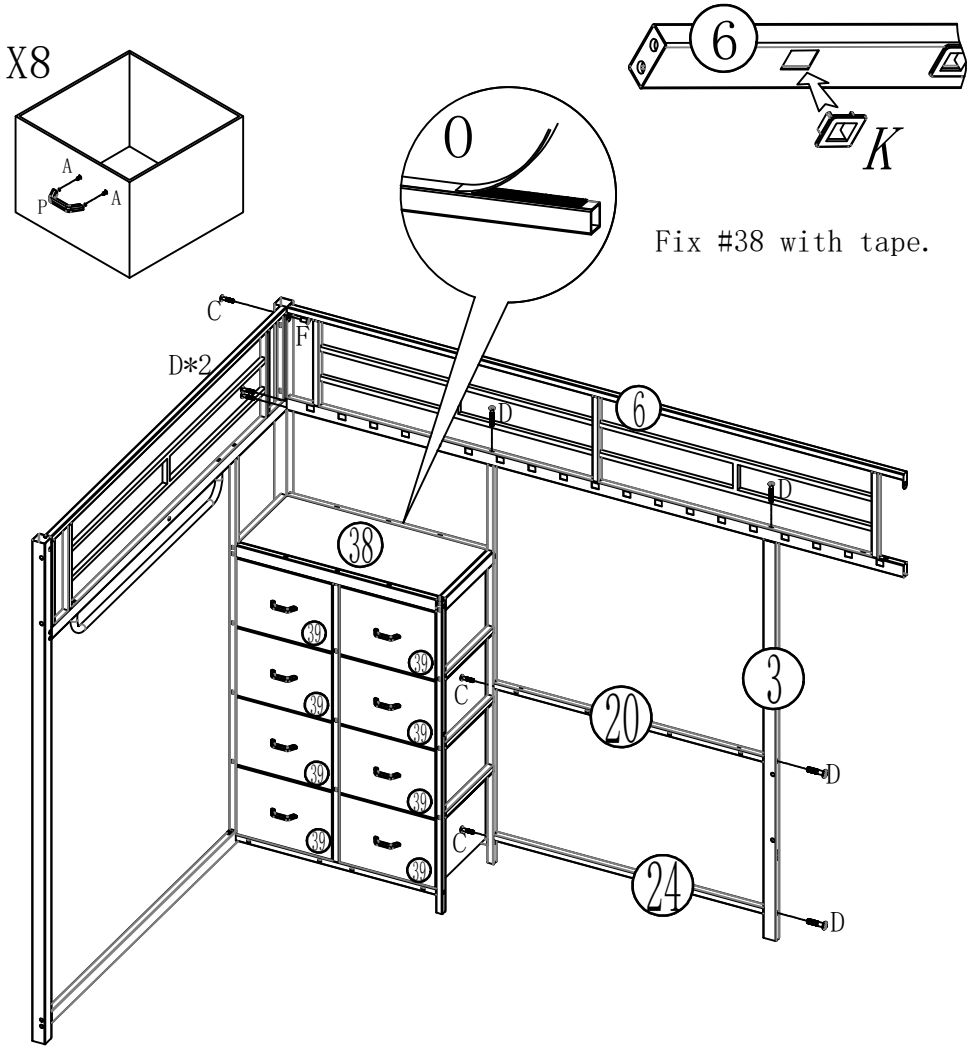

Step 4

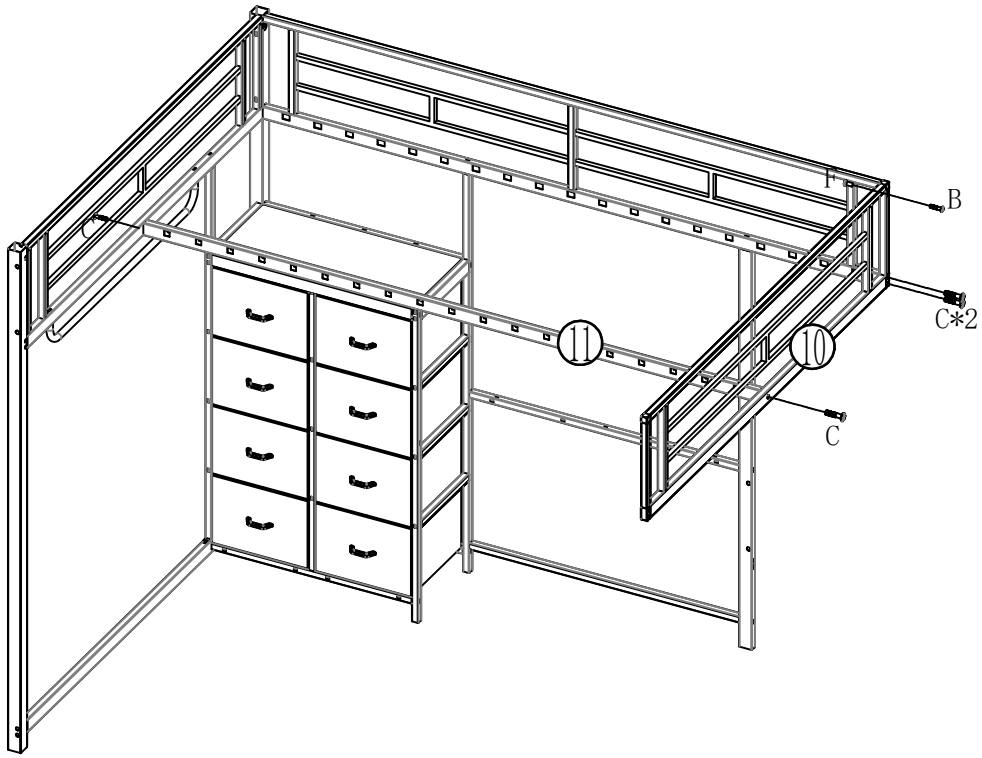

P	A	D	C	F	K	0
8PCS	4*10-16PCS	8*55-6PCS	8*35-3PCS	8*18-1PCS	19PCS	0

C	F	B	L
8*35-4PCS	8*18-1PCS	8*18-1PCS	

Step 5

Attention

Note that this step requires the collaboration of multiple people to complete.

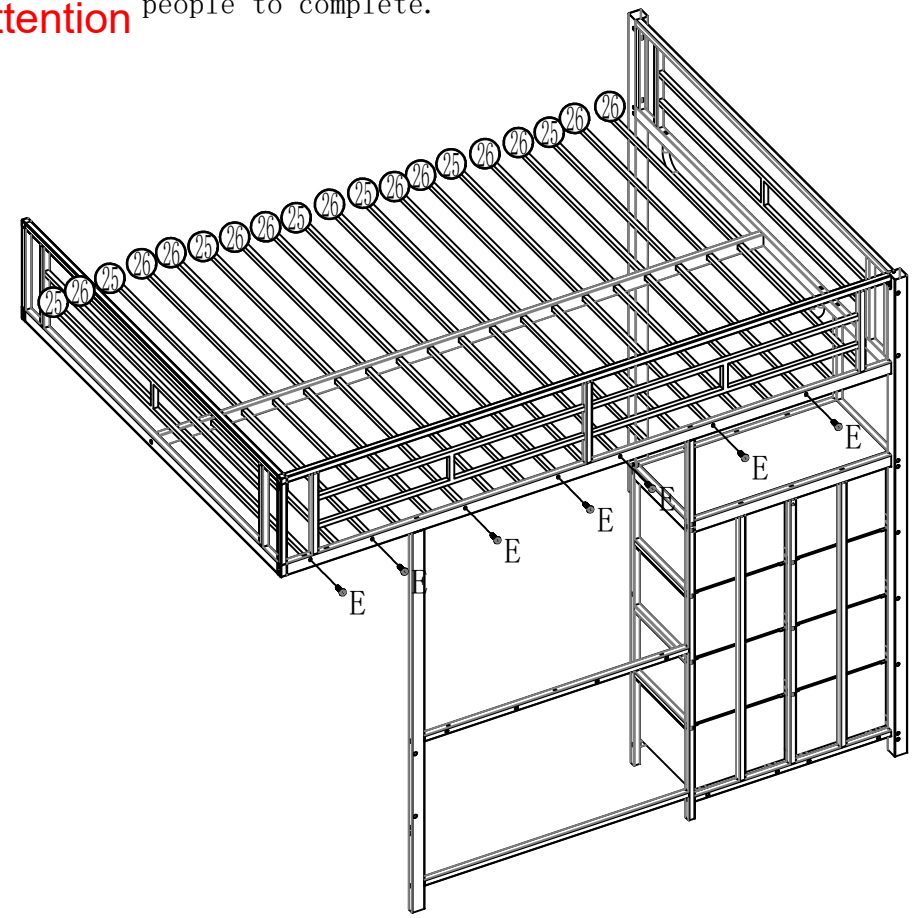

E 6*25-7PCS	L

Step 6

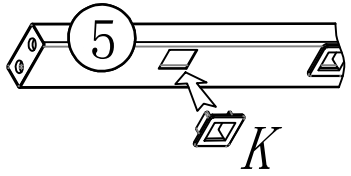

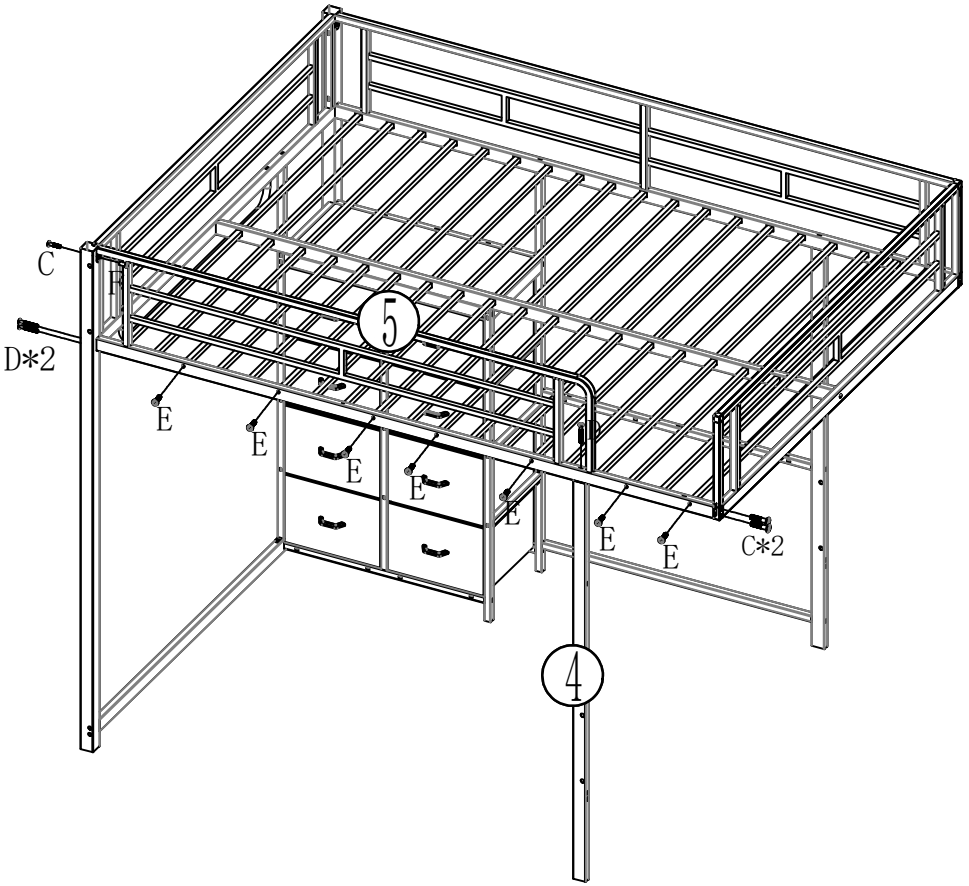

D 8*55-3PCS	F 8*18-1PCS	C 8*35-3PCS	E 6*25-7PCS	K 19PCS	L

Step 7

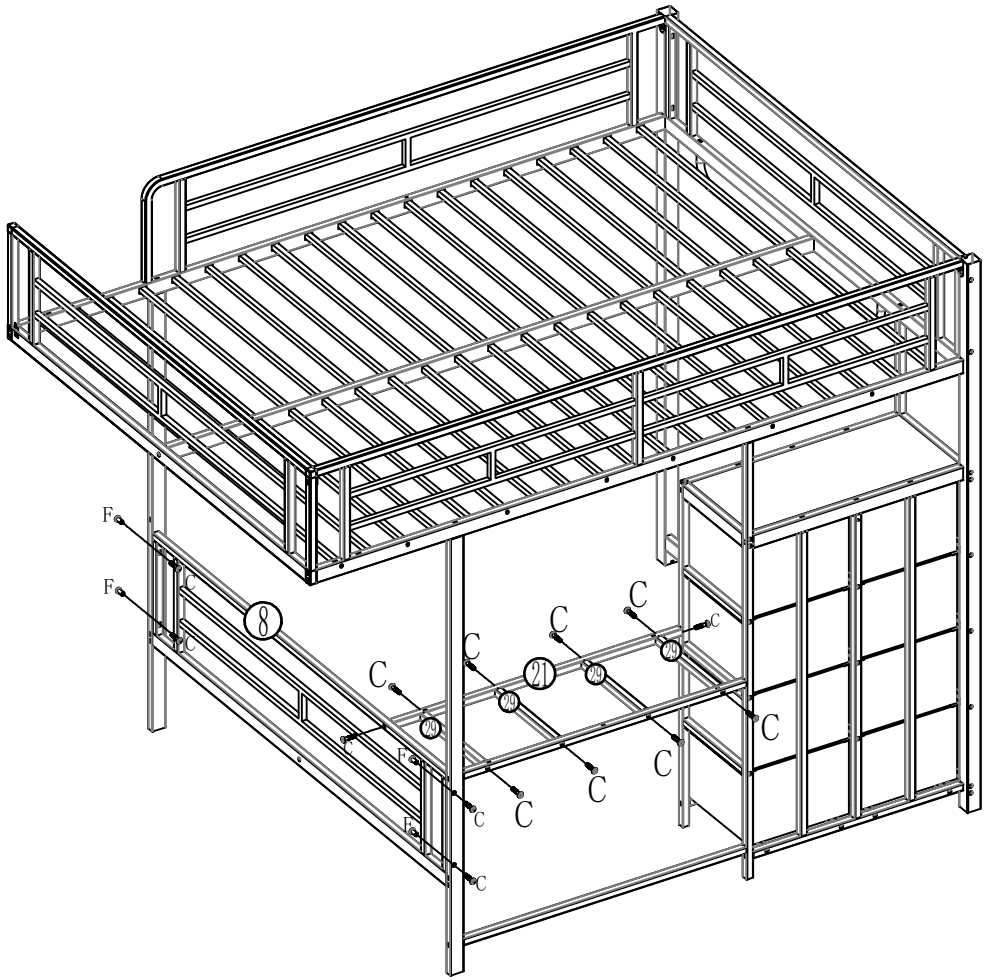

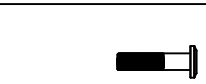

C
8*35-14PCS



F
8*18-4PCS



L

Step 8

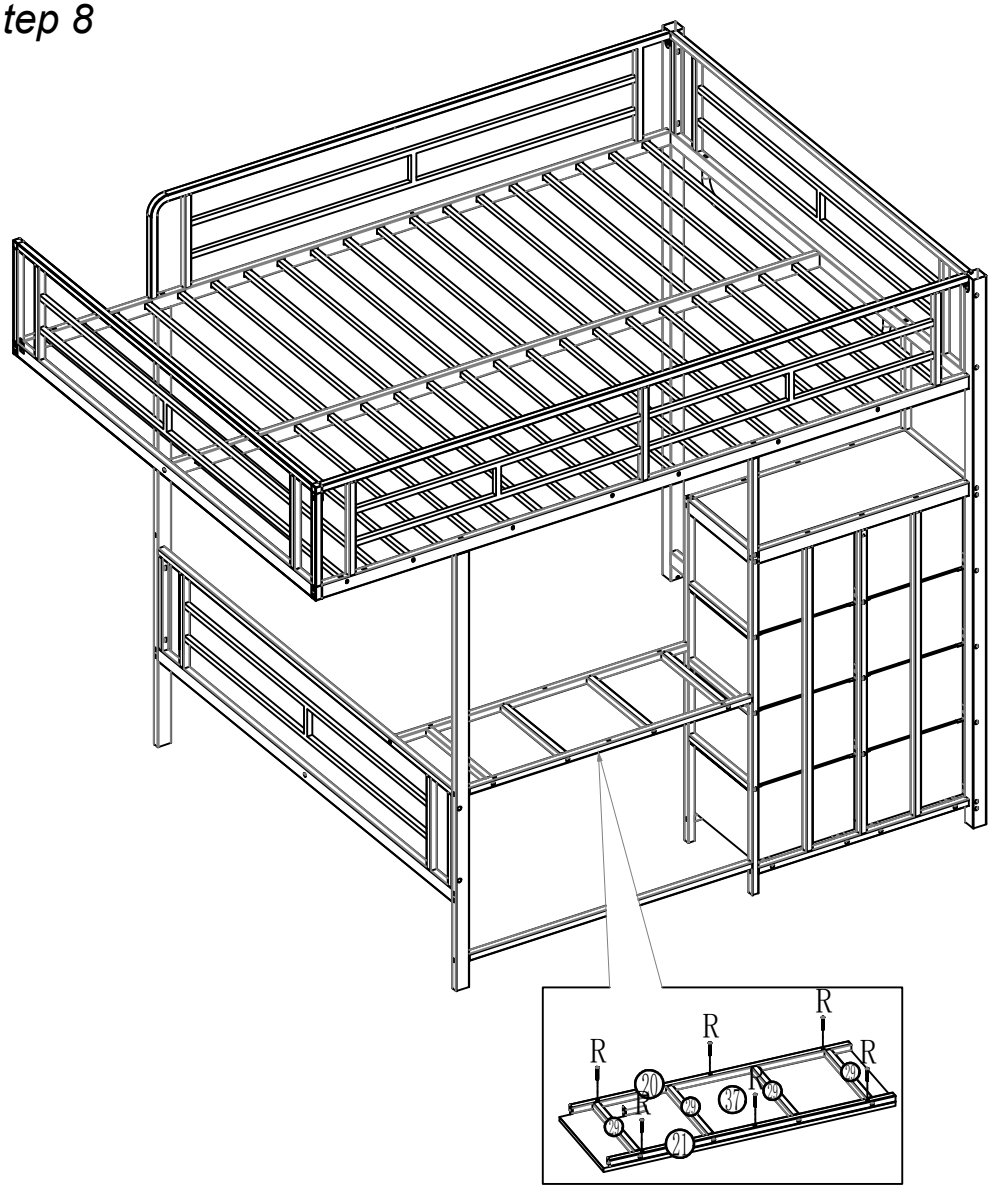



R
4*25-6PCS



M

Step 9

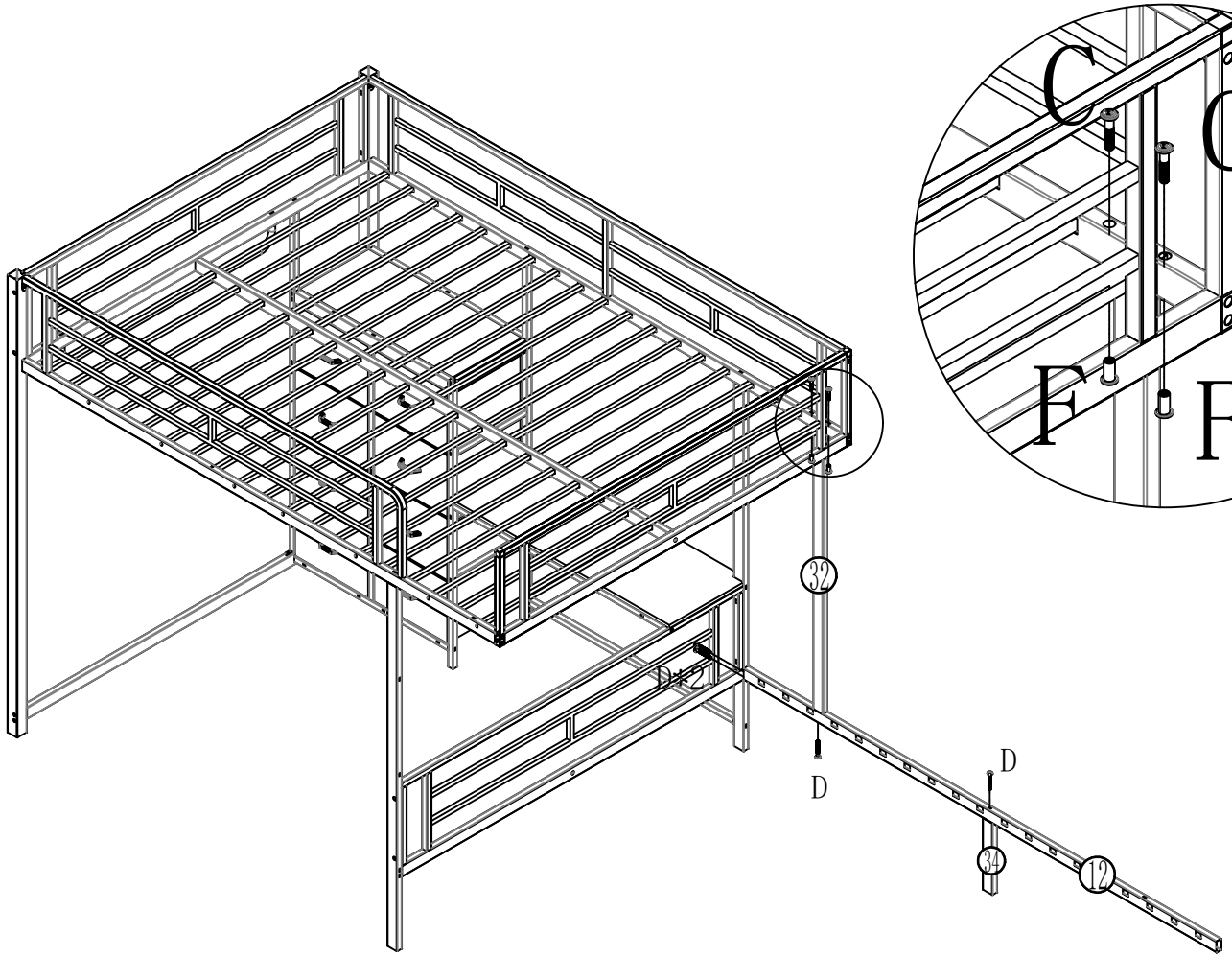

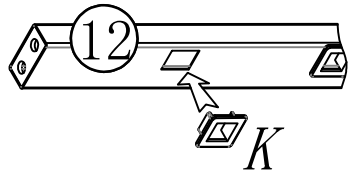

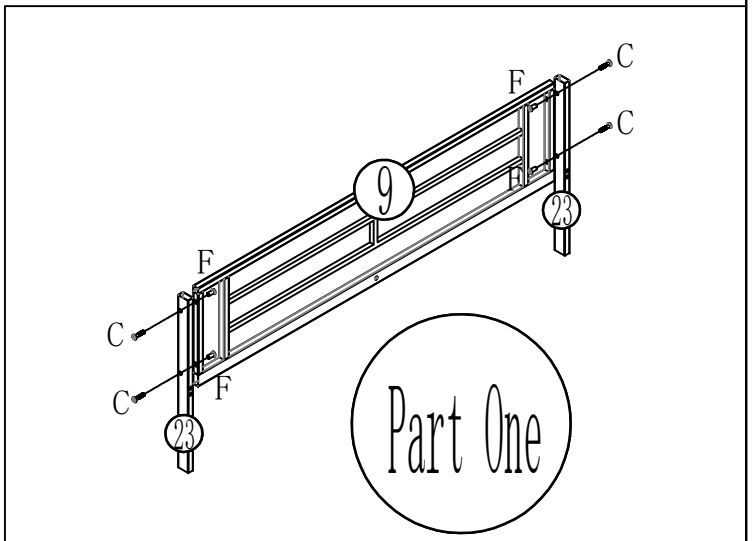

C 8*35-6PCS	F 8*18-6PCS	K 19PCS	D 8*55-4PCS	L

Step 10

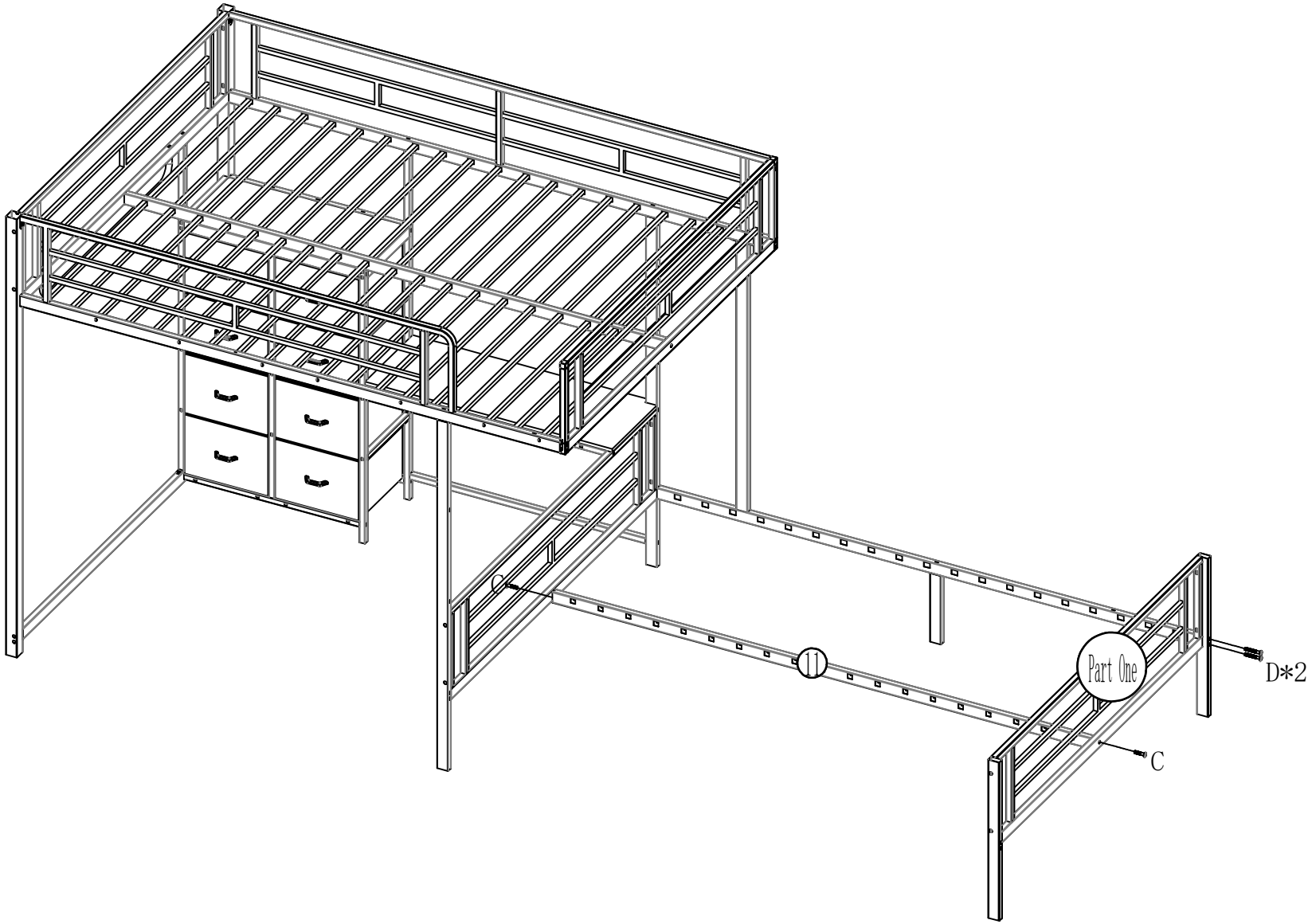

 C 8*35-2PCS	 D 8*55-2PCS	 L

Step 11

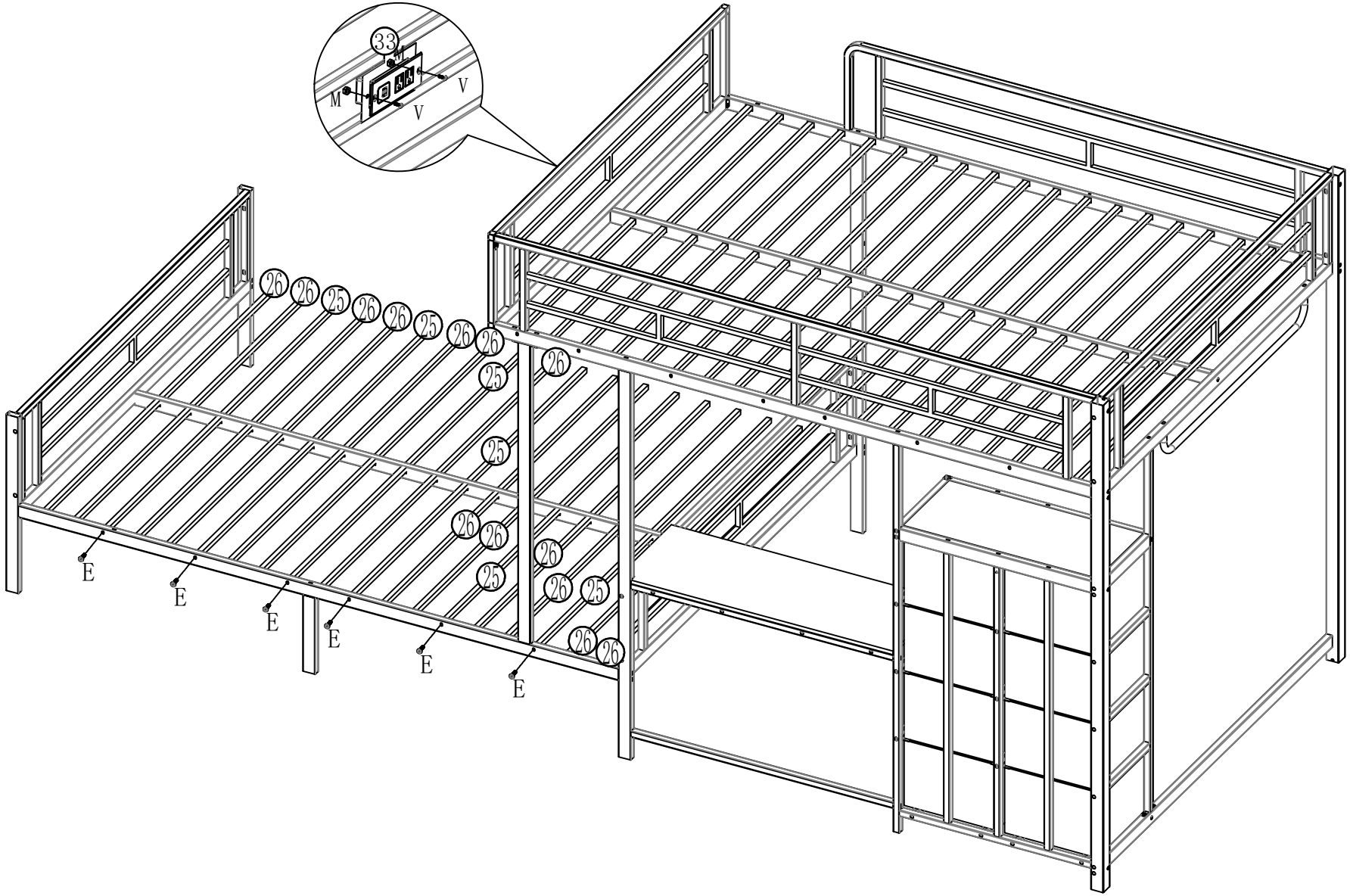

M M4 2PCS	V M4*10 2PCS	E 6*25-6PCS	M	L

Step 12

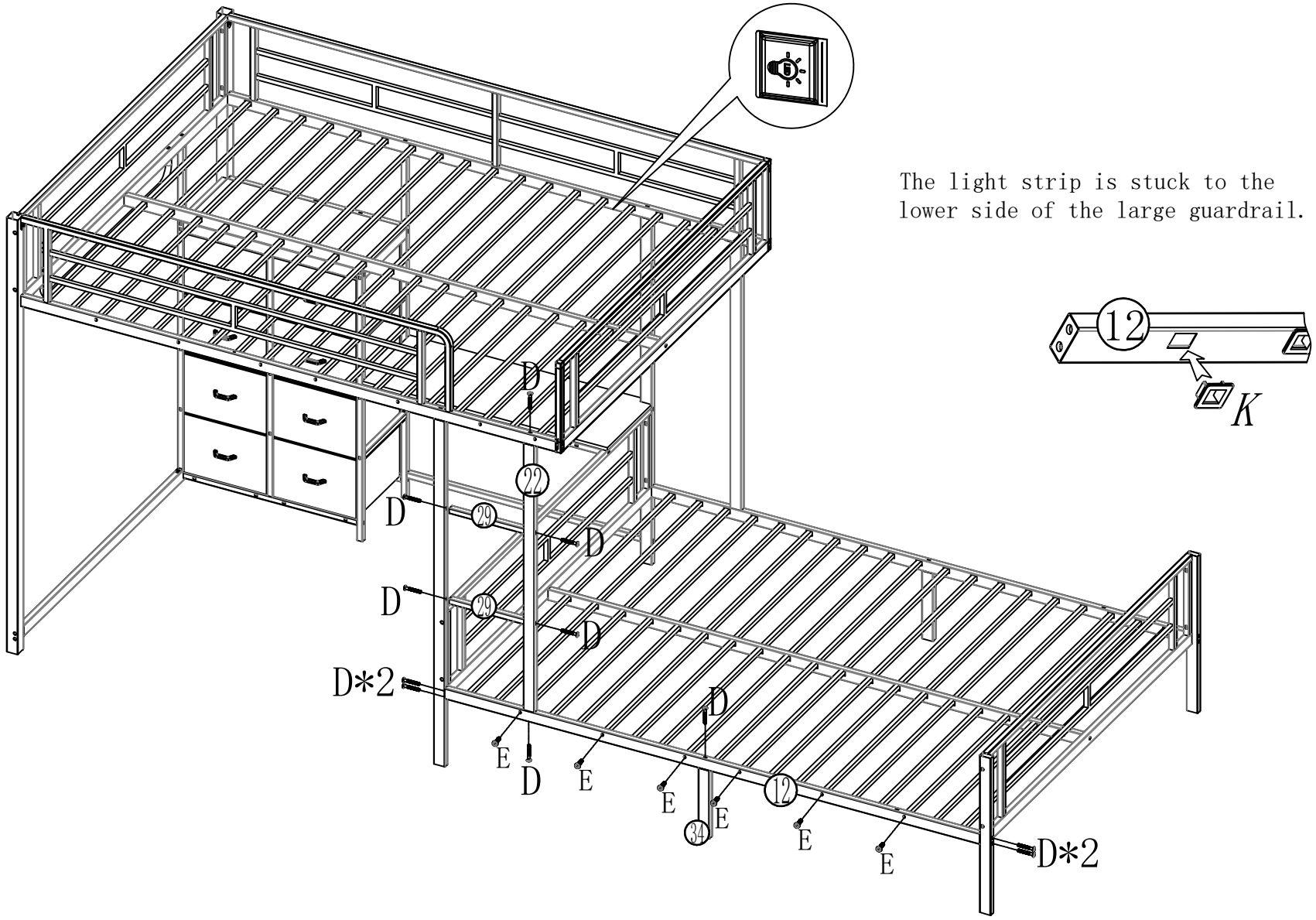

The light strip is stuck to the lower side of the large guardrail.

K	D		E	L
19PCS	8*55-11PCS	1PCS	6*25-6PCS	

Completed loft bed

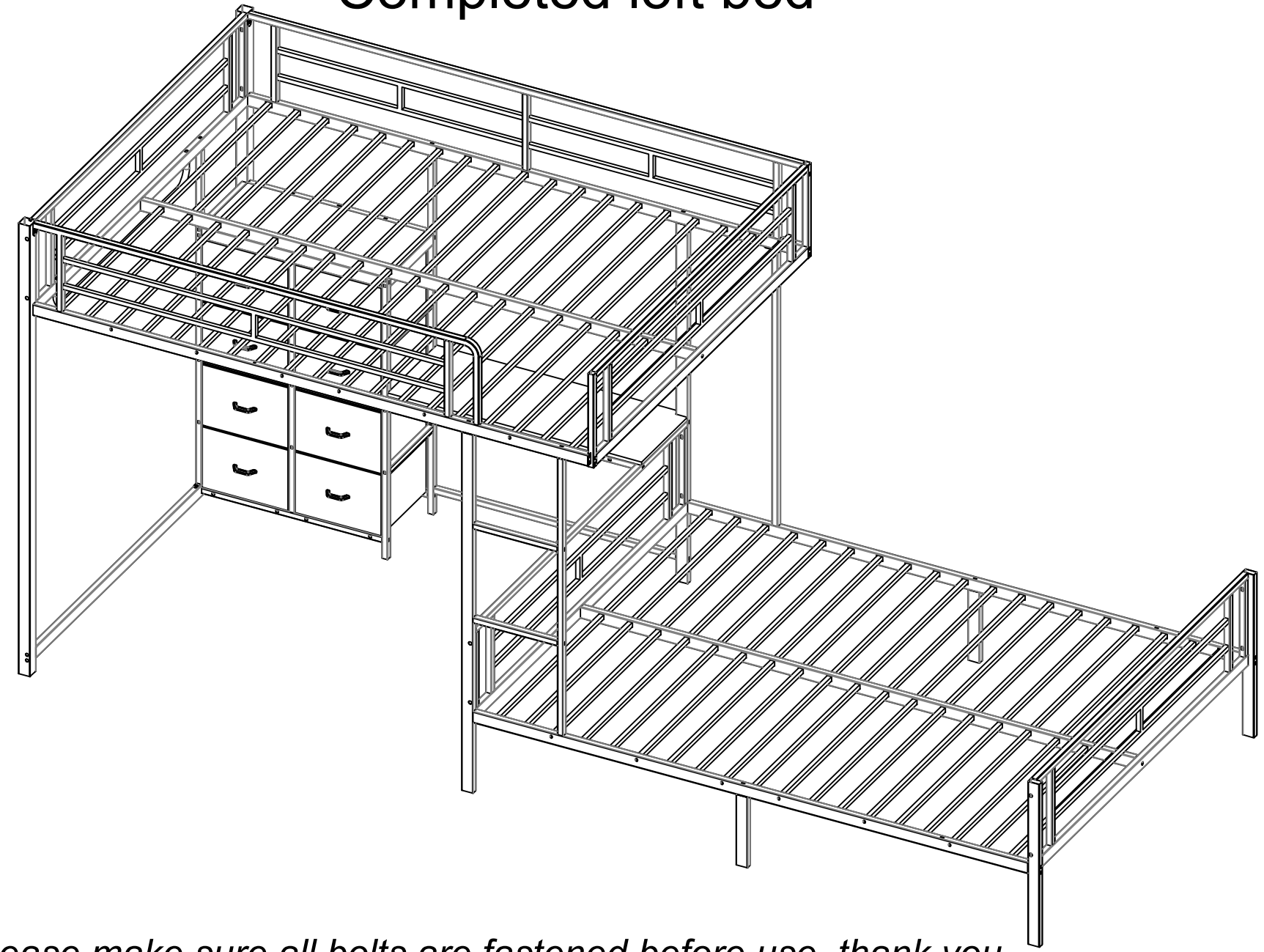

Attention

Please make sure all bolts are fastened before use, thank you.