Executive standard:
En71 and En62115
ASTM F963

McLaren
FORMULA 1 TEAM

# INSTALLATION AND OPERATING INSTRUCTIONS

## Children's electric cars

Drift

Ages 6+

SPEED 14km/h

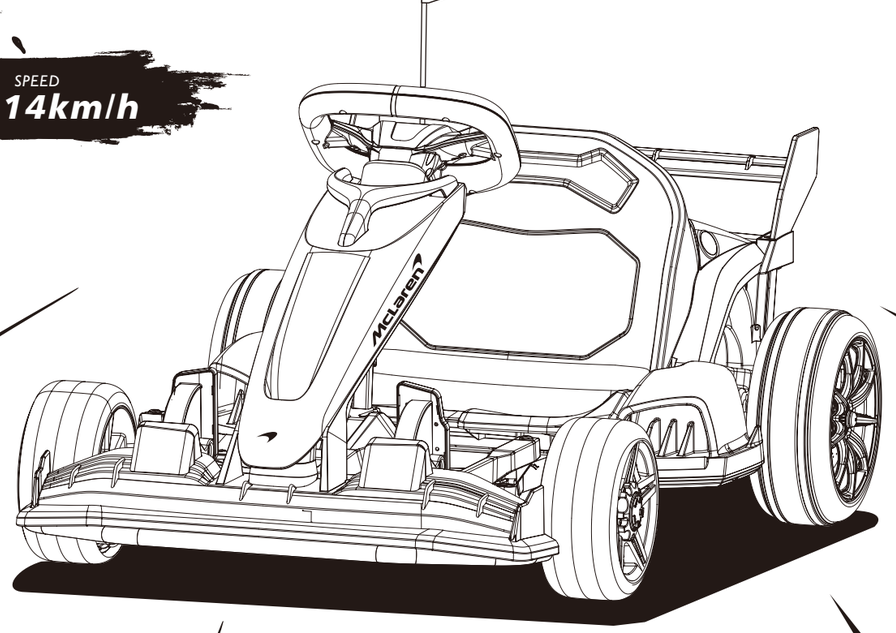


**⚠WARNING:**
- Assembled by an adult.
- This toy was not suitable for Children under 6 years due to its maximum speed.
- RISK OF FIRE. Do not bypass. Replace only with original size and type.

Photos are for reference ONLY.

# INSTALLATION INSTRUCTION

The illustrations in this instruction are used for easier understanding of the operation method of the product and the product structure. Please note there may be differences between the pictures and the physical item.
In order to improve the quality, we may change part of the structure and appearance of the product without an advance notice.

⚠ Please read the instructions carefully before use, it will tell you the right operation method and installation steps . Incorrect operation may damage the product, or even hurt your child. Please keep this instruction ready and easy to find.

## ❶ Safety

### ⚠ WARNING

The owner's manual contains assembly, use and maintenance instructions. The vehicle must be assembled by an adult who has read and understood the instructions in this manual. Keep the packaging away from children and dispose of all packaging before use.
**Note:** For best performance use on flat, hard surfaces.
The following safety hazards may result in serious injury or death to the user of the vehicle:

- This product contains small parts that are for adult assembly only. Keep small children away when assembling. Remove and dispose of all protective material and poly bags before assembly. Be sure to remove all packaging materials and parts from underneath the vehicle body.
- Battery posts, terminals and related accessories contain lead and lead compounds (acids) chemicals known to the state of California to cause cancer, reproductive harm, and are toxic and corrosive. Never open the battery.
- Body parts such as hands, legs, hair and clothing can get caught in moving parts. Never place a body part near a moving part or wear loose clothing while using the vehicle. Always wear shoes when using the vehicle.
- Do not leave a child unattended while using this toy or allow use of this toy in any location that requires braking capability, as this could result in a roll away or loss of control, which may cause serious injury or death.
- Use of this vehicle near streets, motor vehicles, steps, bodies of water, sloped surfaces,hills, wet areas, flammable vapors, in alleys, at night, or in the dark could result in an unexpected accident.
- Using the vehicle in unsafe conditions such as snow, rain, loose dirt, mud, sand or fine gravel may result in unexpected action such as tip over and skidding, and damage to the electrical system and battery.
- Do not use the vehicle in an unsafe manner. Unsafe manner include but are not limited to:

a. Pulling the vehicle with another vehicle or similar device
b. Allowing more than one rider
c. Pushing the user from the back
d. Traveling at an unsafe speed
Always use common sense and safe practices when using the vehicle.

## BATTERY WARNINGS

### ⚠WARNING

The following safety hazards may result in serious injury or death to the user of the vehicle:



- Use of a battery or charger other than the supplied 36V rechargeable battery and charger may cause a fire or explosion. Only use the supplied 36V rechargeable battery and charger with the vehicle.



- Using the 36V rechargeable battery and charger for any other product may result in overheating, fire or explosion. Never use the 36V rechargeable battery and charger with another product.



- Explosive gases are created during charging. Charge the battery in a well ventilated area. Do not charge the battery near heat or flammable materials.
- Contact between the positive and negative terminals may result in fire or explosion. Avoid direct contact between the terminals. Picking up the battery by the wires or charger can cause damage to the battery and may result in a fire. Always pick up the battery by it's case or handles.



## ❸ Safety



- Liquids on the battery may cause fire or electric shock. Always keep all liquids away from the battery and keep the battery dry.
- Contact or exposure to battery leakage (lead acid) may cause serious injury. If contact or exposure occurs immediately call your physician. If the chemical is on the skin or in the eyes, flush with cool water for 15 minutes. If the chemical was swallowed, immediately give the person water or milk. Do not give water or milk if the patient is vomiting or has a decreased level of alertness. Do not induce vomiting.
- Battery posts, terminals and related accessories contain lead and lead compounds (acid), chemicals known to the State of California to cause cancer, reproductive harm and are toxic and corrosive. Never open the battery.
- Tampering or modifying the electric circuit system may cause a shock, fire or explosion and permanently damage the system. Exposed wiring, circuitry in the charger may cause electric shock. Always keep the charger housing closed.

## RE-CHARGE INTERVAL AND TIME
## Important!

- Damage to the battery may occur if it is allowed to drain completely. Do not allow the battery to drain completely.
- Check the battery and charger (supply cord, connector) for wear and damage before charging. Do not charge the battery if damage has occurred.
- On average you will need to charge the battery between 8 and 12 hours.
- Do not charge the battery for more than 20 hours. Failure to charge the battery as directed could cause permanent damage to the battery and void the warranty.
- Only an adult who has read and understood the safety warnings should handle, charge and recharge the battery.

Before using the vehicle the child should understand the vehicle controls and safety issues. They must also demonstrate the capability to handle the vehicle and operate its controls. It is the responsibility of the adult to educate the child and supervise the vehicles use. Read the following safety warnings to any child using the vehicle before riding.

### ⚠WARNING

- This toy was not suitable for Children under 6 years due to its maximum speed.
- To reduce the risk of injury, adult supervision is required.
- Never use in roadways, near motor vehicles, on or near steep inclines or steps, swimming pools or other bodies of water; always wear shoes, and never allow more than 1 rider.
- Protective equipment should be worn. Not to be used in traffic.
- Do not drive the vehicle into loose dirt, mud, sand or fine gravel and Only drive on level ground
- Always wear shoes when using the vehicle.
- Keep your hands, hair and clothes away from moving parts.
- A reminder that the toy should beused with caution since skill is required to avoid falls or collisions causing injury to the useror third parties.
- This toy produces flashes that may trigger epilepsy in sensitive individuals.

## USER REQUIREMENTS AND WARNINGS

| | |
|---|---|
| **Age** | 6+ |
| **Max Weight** | ( 60kgs) |

## CARE WARNINGS

### ⚠WARNING

- Park the vehicle indoors or cover it with a tarp to protect it from wet weather.
- Do not leave the vehicle in the sun for long periods of time or fading may occur. Store in shade or cover with tarp.
- Do not wash the vehicle with a hose.
- Do not wash the vehicle with soap and water.
- Pay attention while driving the vehicle, avoid falls or collisions causing injury to the user or third parties.
- Please check the component parts before using, and make regularly examine the transformers or battery chargers for in the event of any damage on the cord, plug, enclosure and other parts, the vehicle shall not be used until the damage has been repaired, to avoid an accident.

## ❷ Specifications

| Name | specification |
|---|---|
| Battery | 18V9Ah*2 |
| Motor | DC 36V*2 |
| Suitable age | 6+ |
| Max weight | 60KG |
| Body size | Folded size: 98CM*73CM*54CM<br>Maximum size: 126CM*73CM*54CM |
| Speed | Low speed 0-10 KM/H<br>High speed 0-14 KM/H |
| Hours of use | charging 8-12 hours, using 1-2 hours |
| Charger | Input: 100-120V AC<br>Output: DC 36V1A |
| Main material | ABS(Acrylonitrile Butadiene Styrene),<br>PA(Polyamide), PP(Polypropylene) and Iron |

*The above parameters contain optional features, specific parameters please refer to our samples.



## ❸ Parts

### Parts list

**B**

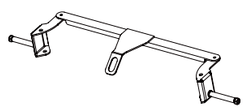

Front axle*1

**C**



Allen key*1

**D**



screw*2

**E**



washer*2

**F**



M8 nut*2

**G**

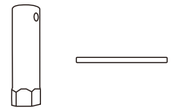

Allen key*2 sets

**H**



Rear axle*1

**I**

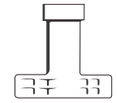

M8 spanner*1

**J**



Rear wheel*2

**K**



Front wheel*2

**L**



Rear wheel cover*2

**M**



Front wheel cover*2

**N**



steering axle support*1

**O**

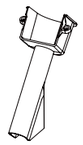

steering axle sleeve*1

**P**

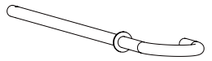

steering axle*1

**Q**



front cover*1

**R**

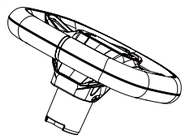

steering wheel*1

**S**

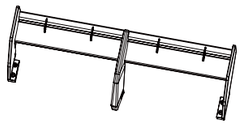

rear tail wing*1

**T**



Self-tapping screw*4

**U**



seat*1

**V**



flag*1

**W**

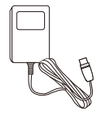

Charger*1

**X**



Instruction Book*1

**Y**



backup fuse*1

*Photos are for reference ONLY.

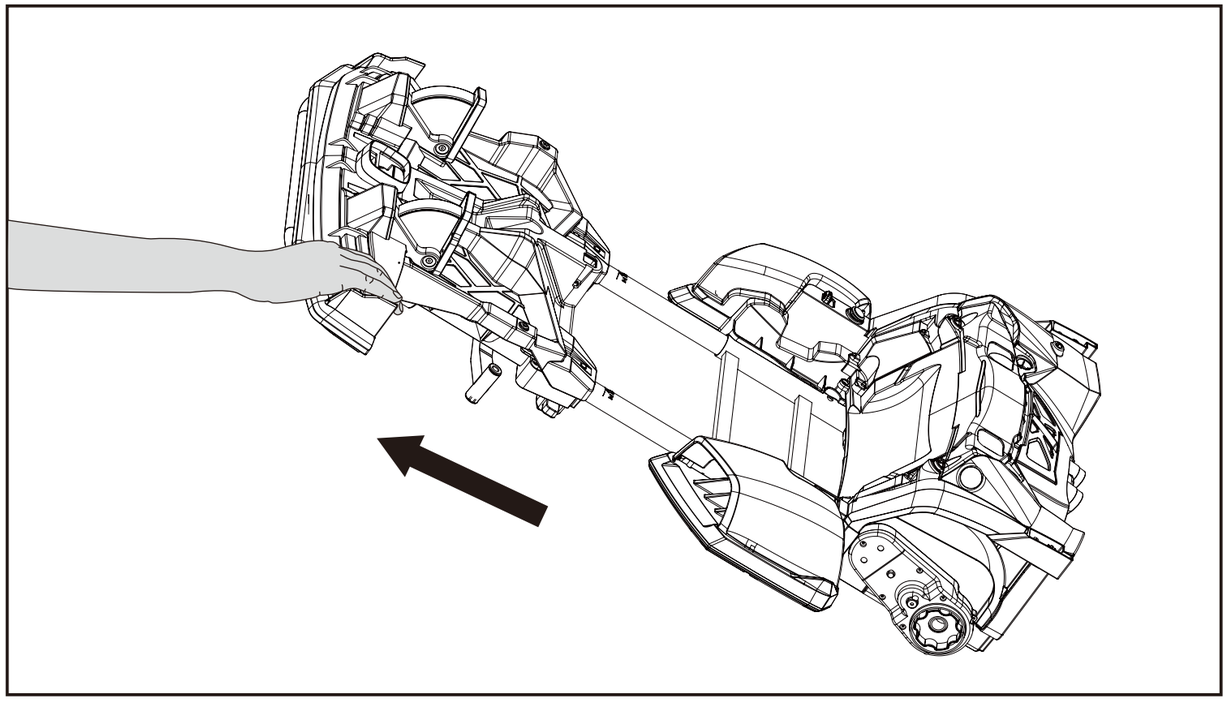

**Preparation before installation**

**Lift the car and pull it forward to lengthen the car body, as shown in figure .**

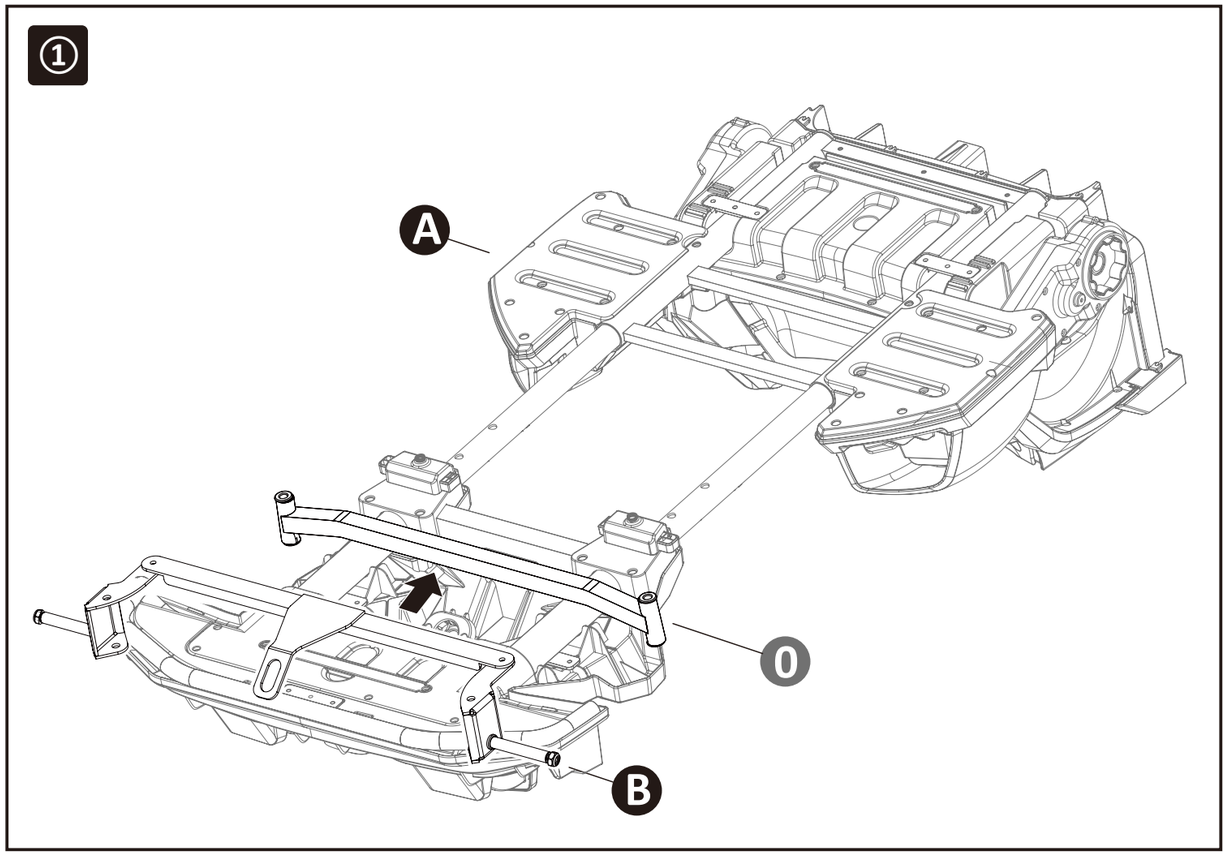






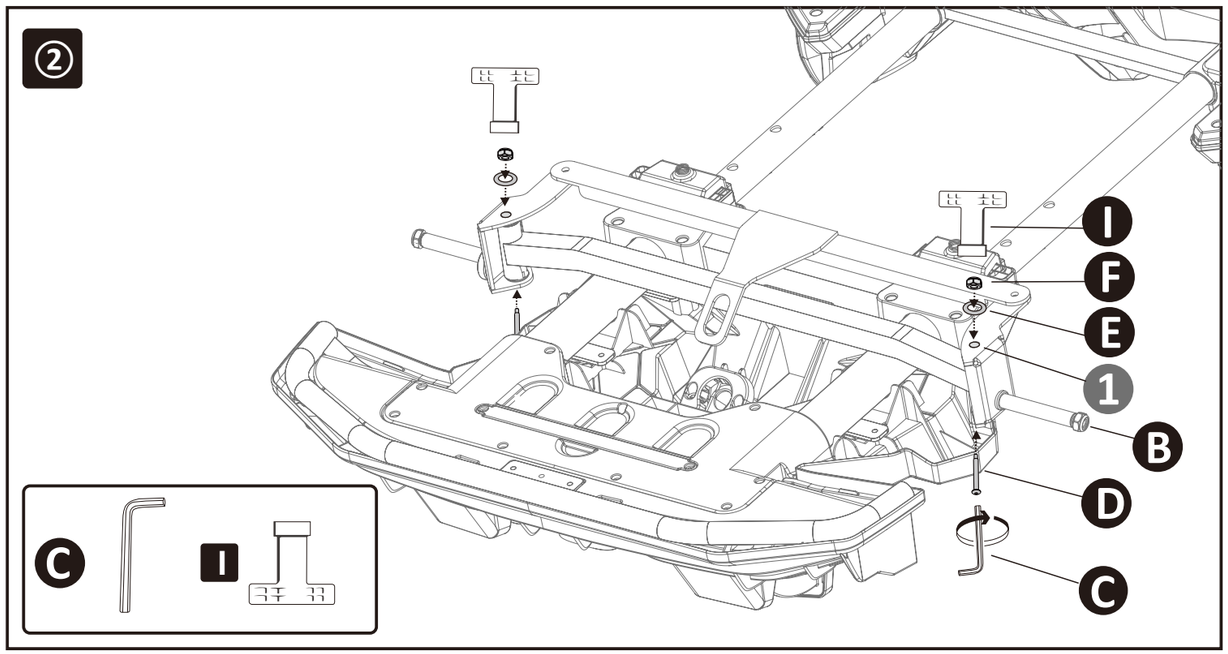


**Step 1: Install front axle**

1. Lift the A( car body) and place the B( front axle) in position 1 of the A( car body).
2. Then pass the D (screw) through the 1. Put E (washer) ,F(M8 Nut)to D(screw), tighten with F (M8 nut) finally.

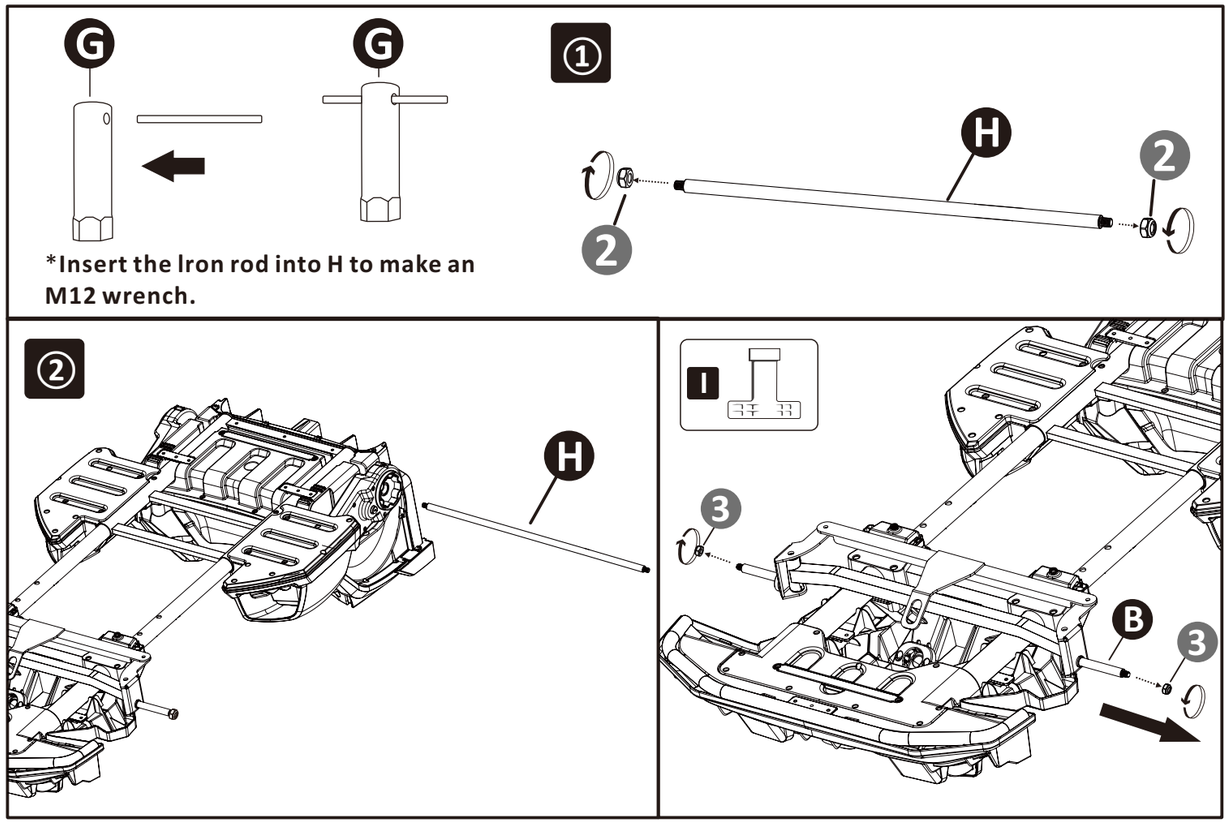


**Step 2: Install rear axle**

1. Use G (M12 wrench) to loosen two pieces of 2 (M12 nut) on the H (rear axle).
2. Insert the H(rear axle) into the A (car body) as shown in the diagram to ensure that both sides remain the same length.
3. Use I (M8 spanner) to loosen 3 (M8 nut) in counterclockwise direction.

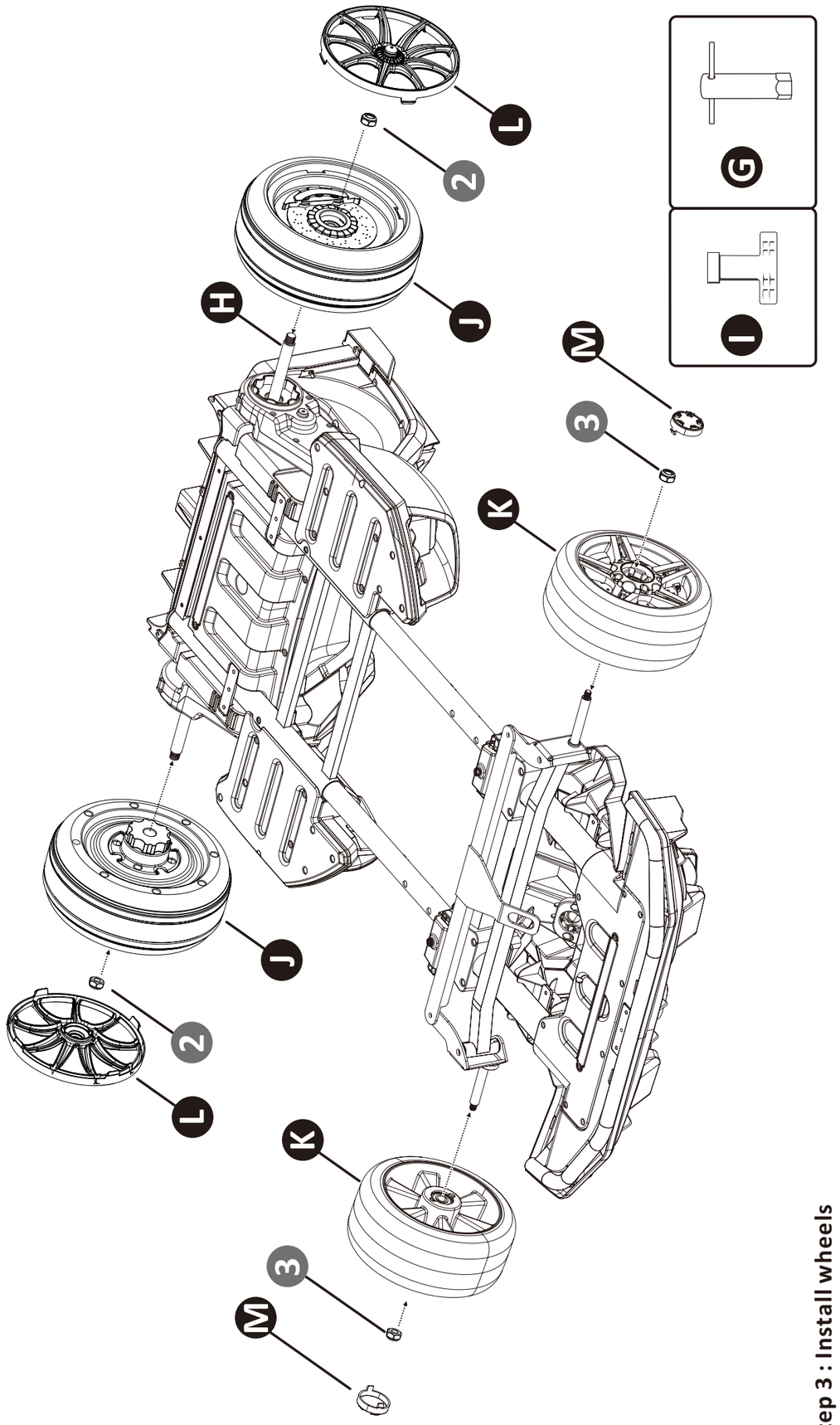


## Step 3 : Install wheels

1. Install rear wheel: first install 2 pieces of J(rear wheel) on the left and right sides of the H(rear axle), use G (M12 wrench) to install 2 (M12 nut) on the rear axle . and finally install L( Rear wheel cover) on the J (rear wheel).
2. Install front wheel: first install 2 pieces of K(front wheel) on the left and right sides of the front axle, use I (M8 spanner) to install 3 (M8 nut) on the front axle . and finally install M( Front wheel cover) on the K(front wheel).





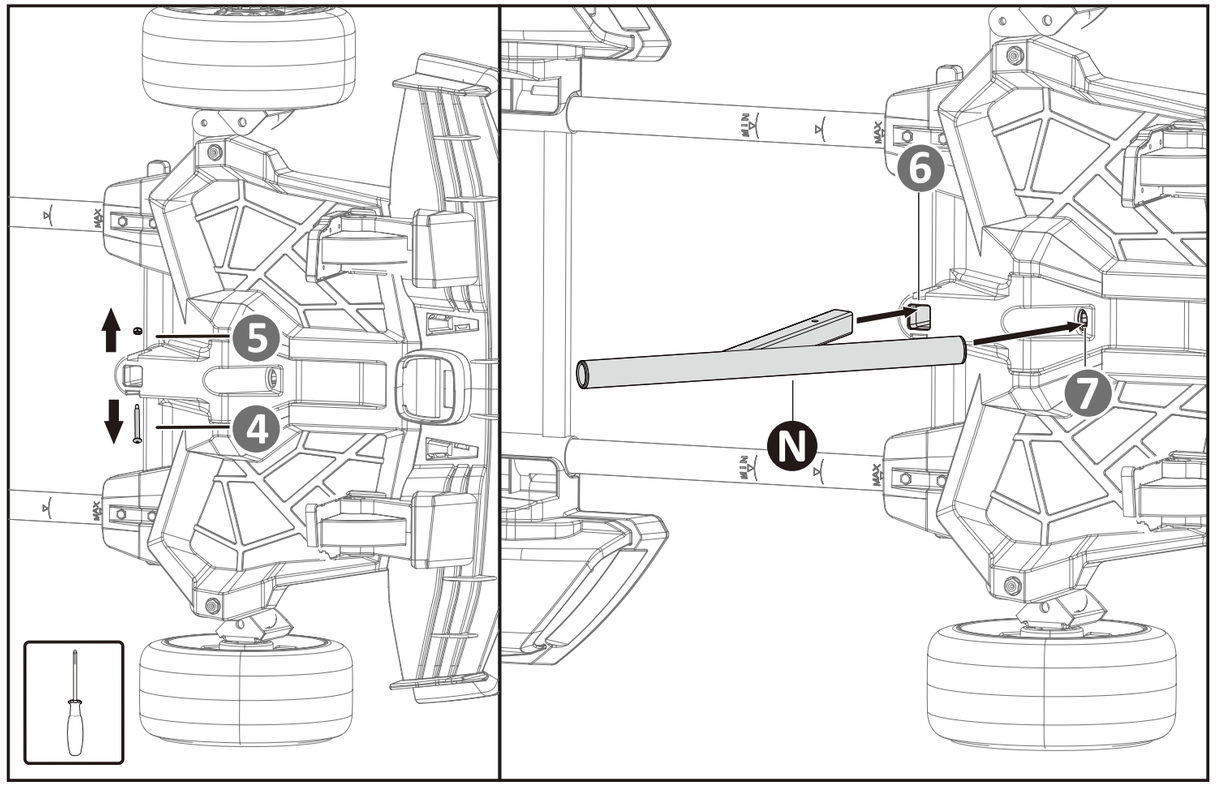


## Step 4-1: Install steering axle support

1. First turn the car body over as shown.
2. Remove the 4 screws and 5 nuts from the body with the screwdriver

## Step 4-2: Install steering axle support

Put the N( steering axle support) align with the 6 square hole and 7 round hole of the A( car body) , then insert the P down into place.

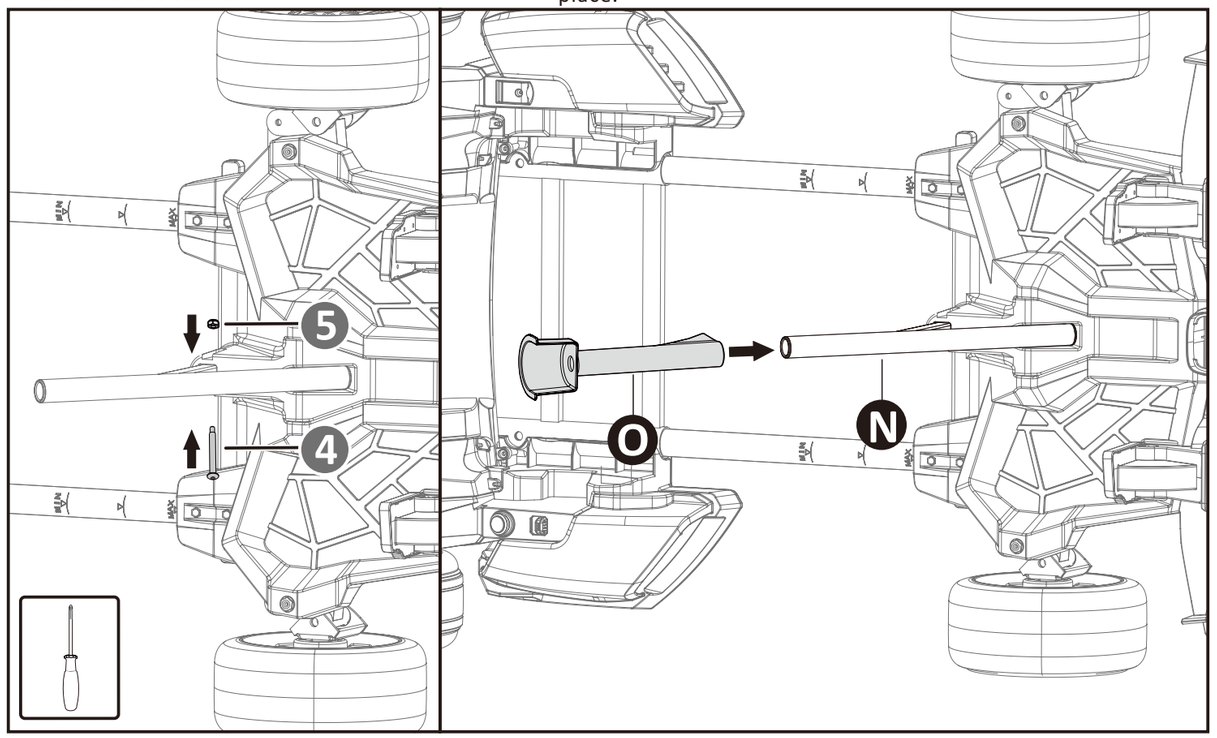


## Step 4-3: Install steering axle support

Replace the 4 screws and 5 nuts

## Step 5: Install steering axle sleeve

Put O(steering axle sleeve) on N(steering axle support).

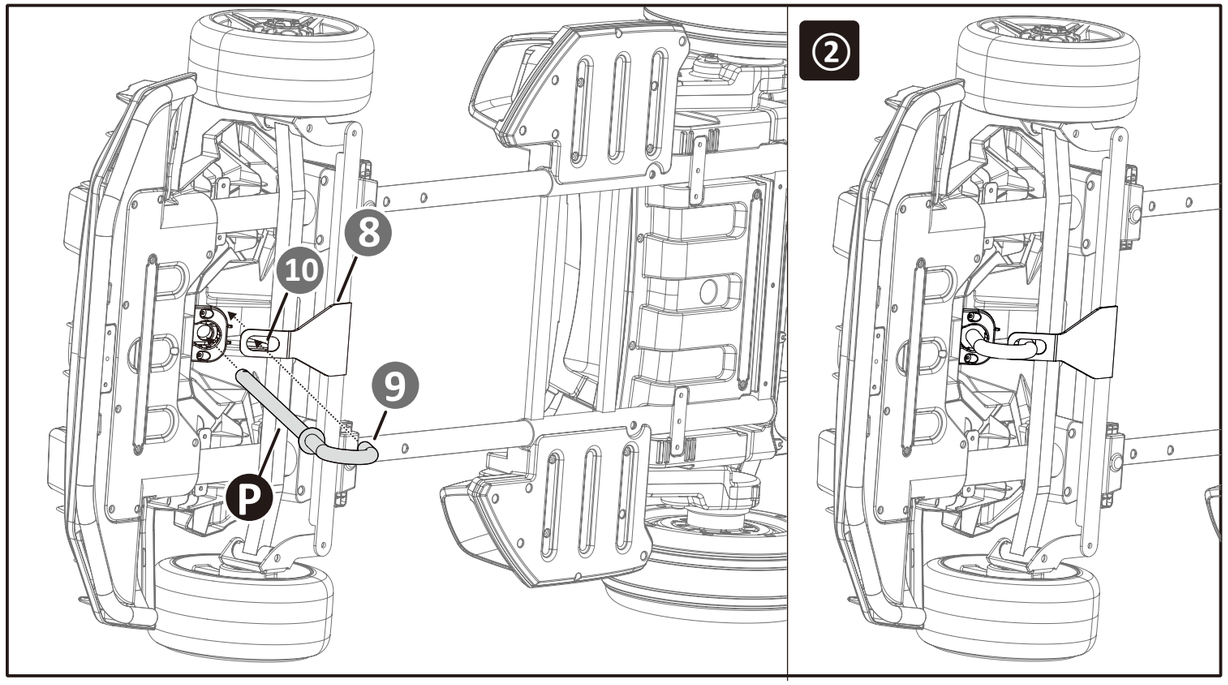


## Step 6: Install Steering Axel

1. First turn the car body over as shown.
2. Insert P (steering axle) through 8, (The 9 rod of P inserted into the 10 hole. The complete picture please check picture 2.）

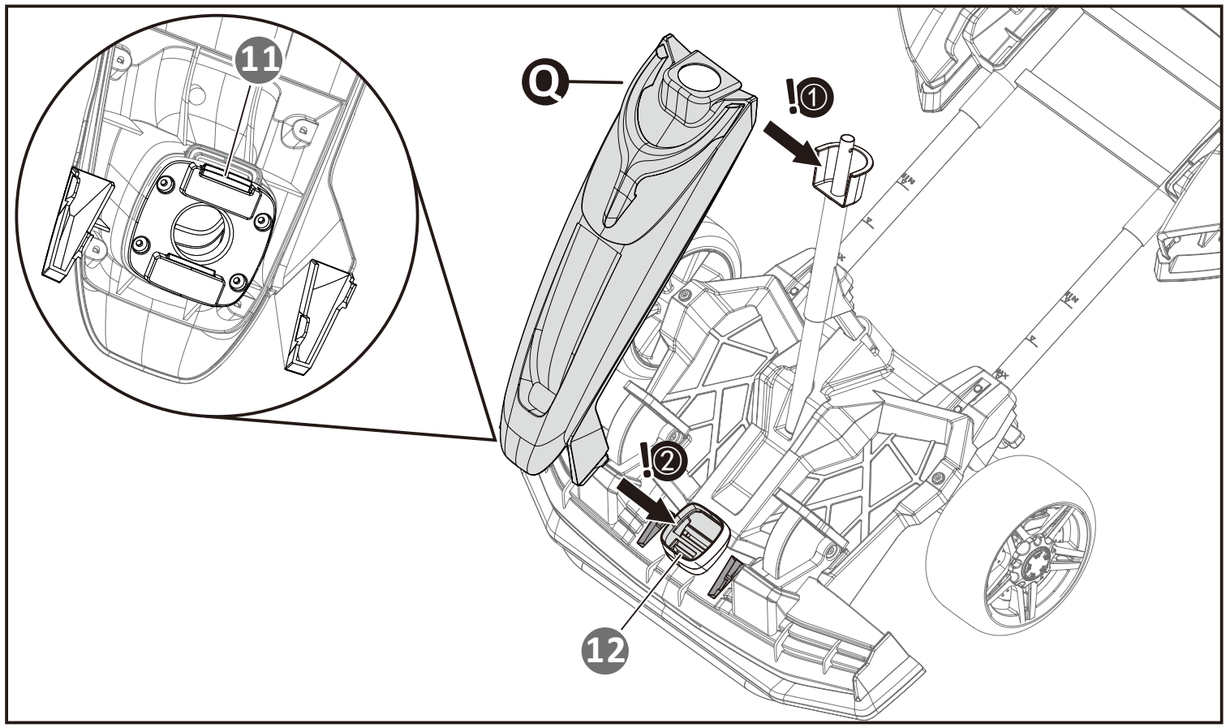


## Step 7: Install Front cover

Install Q (front cover) on the steering axle, then align the front 11 with the 12 on the car body. You need to fasten the clasps on both sides first, then press down tightly.





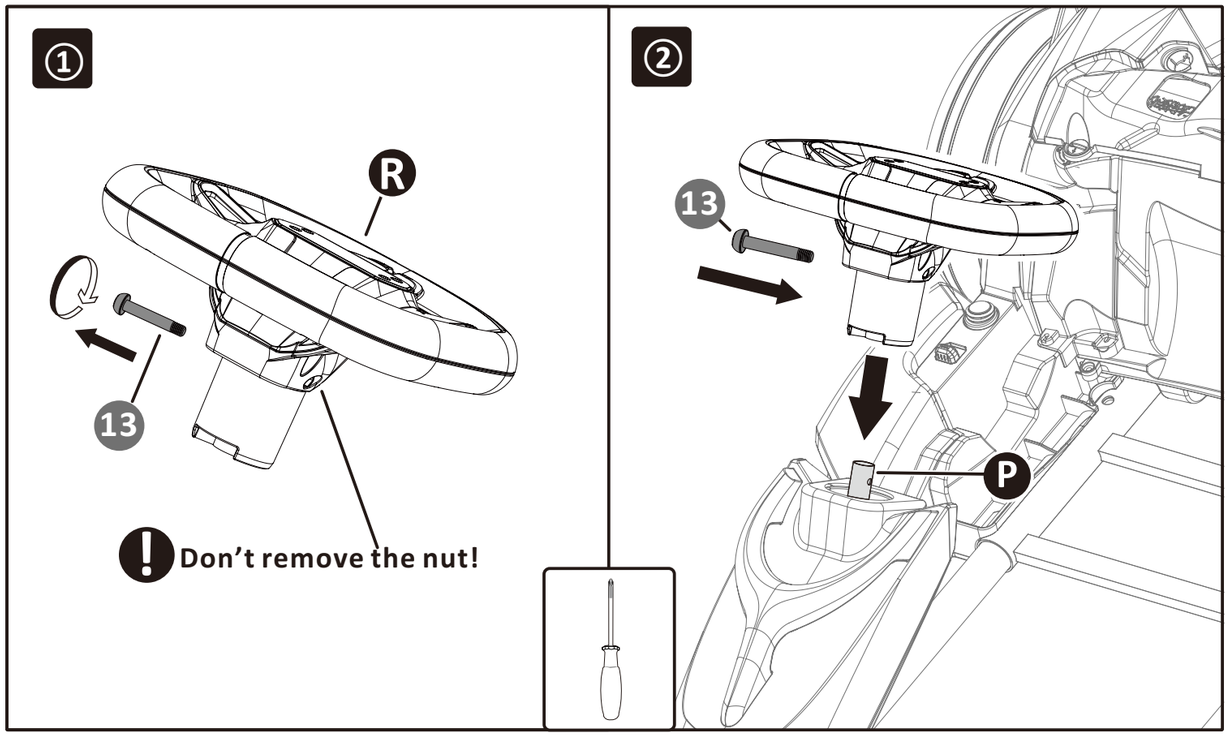


## Step 8: Install Steering Wheel

1. First, use screwdriver to unscrew 13 (screw) from R(steering wheel) by anticlockwise.
2. Then install the R(steering wheel) onto the P (steering axle). Install 13 (screw) onto R (steering wheel) as shown in the figure.

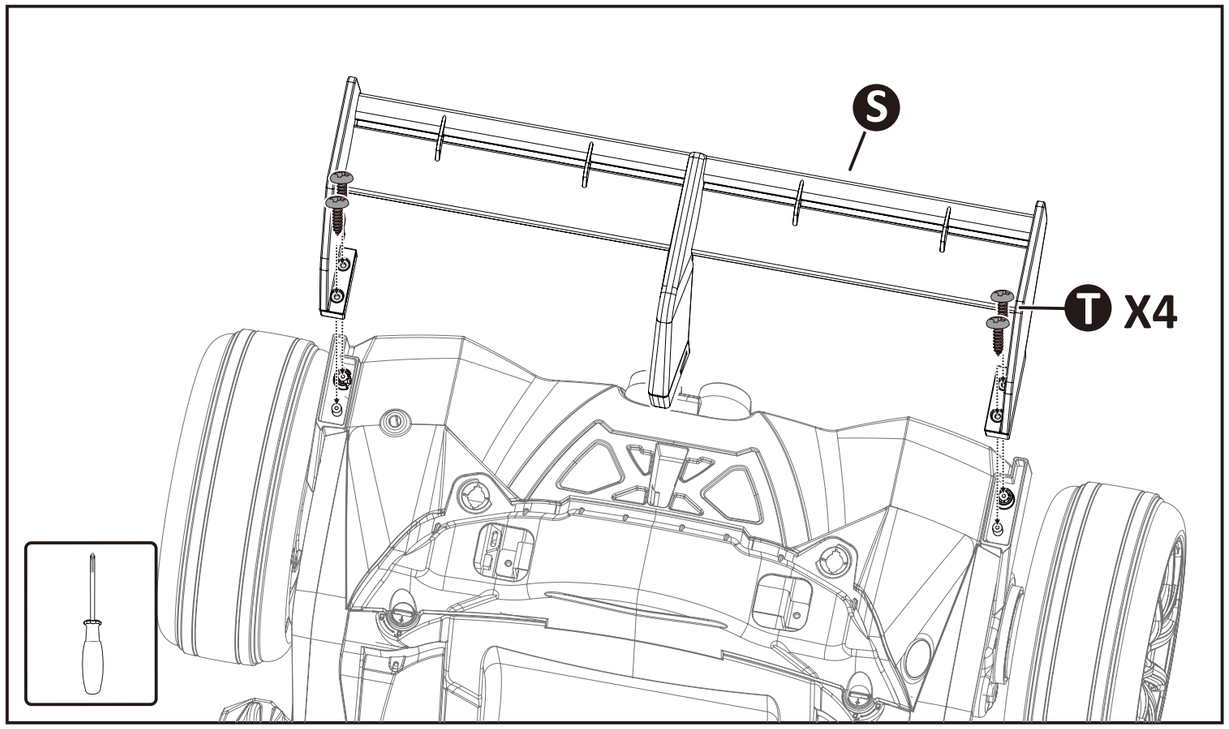


## Step 9: Install the rear tail wing

Install the S (rear tail wing) into the two holes of the car body as shown in the figure, then install the 4 T (screws) clockwise as shown in the figure.

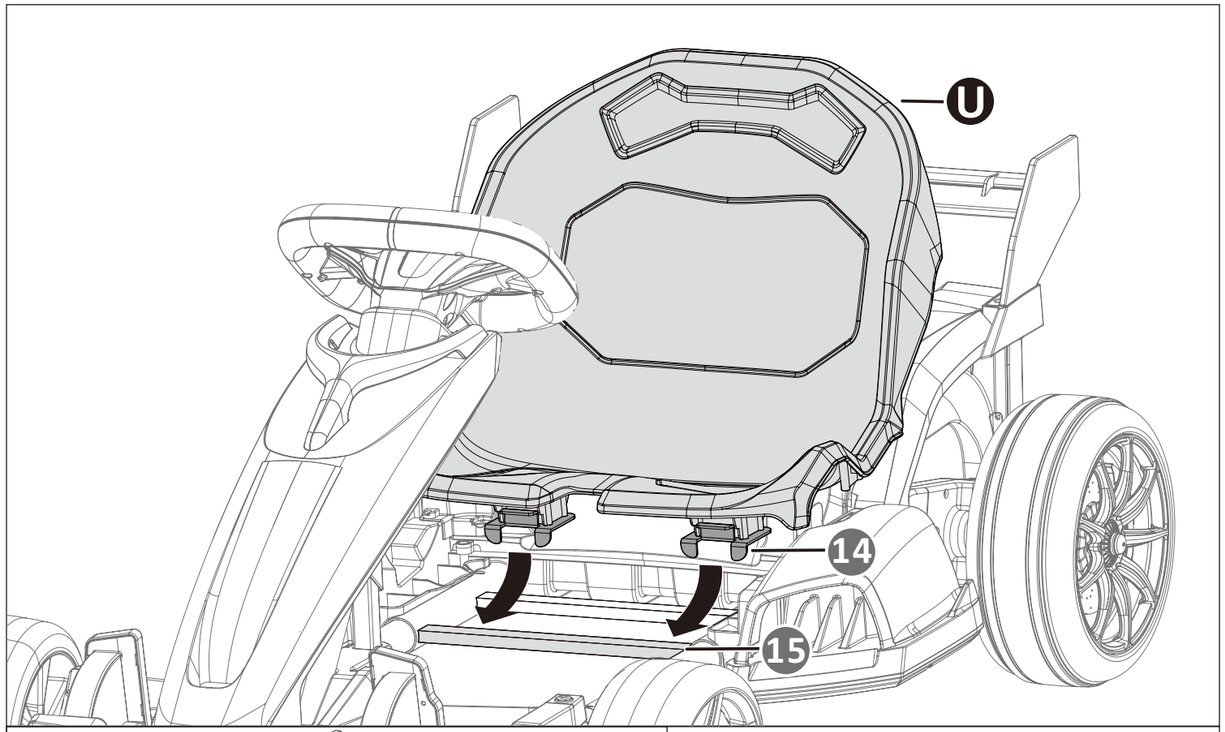


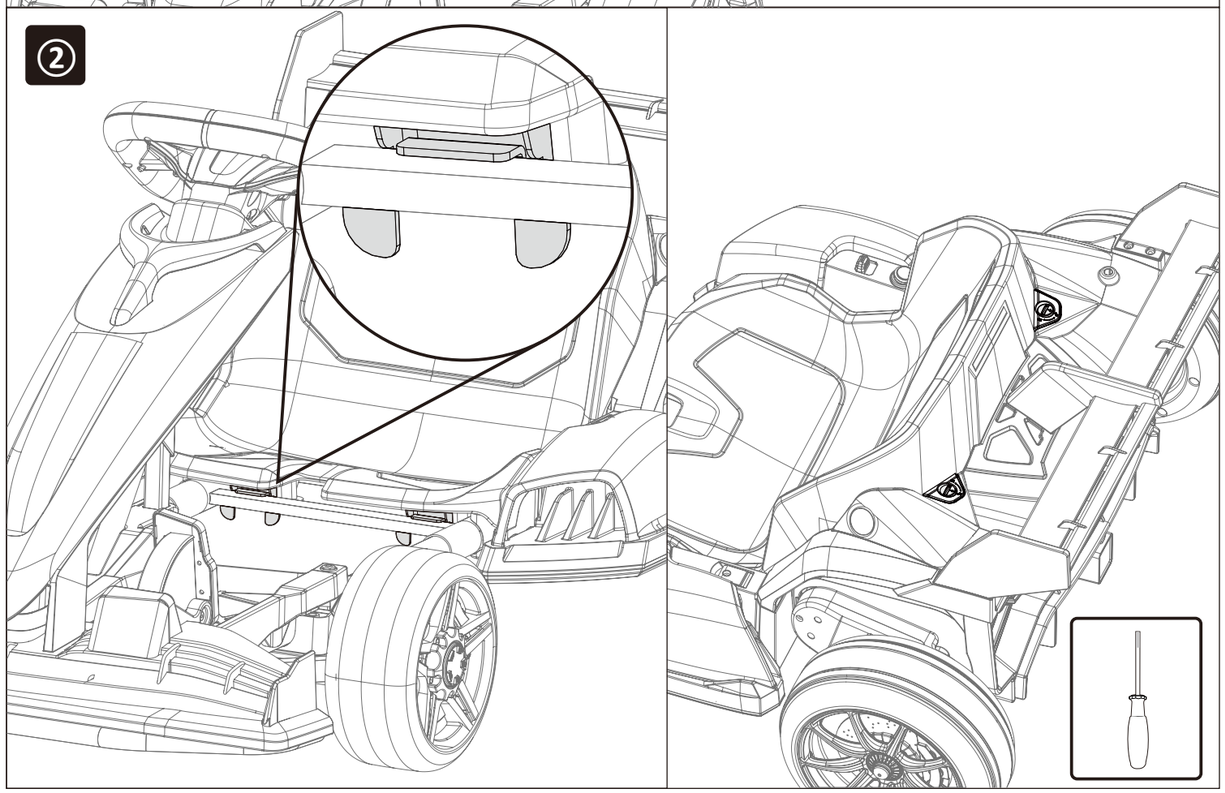


## Step 10: Install Backrest

1. Install U (seat) to the vehicle body at a forward tilting angle. Pay attention to aligning the 14 buckle on the seat with the 15 square tube on the car body. ② is completed drawing.
2. Use a flat-head screwdriver to screw the buckle to the "🔓" position to lock the seat.





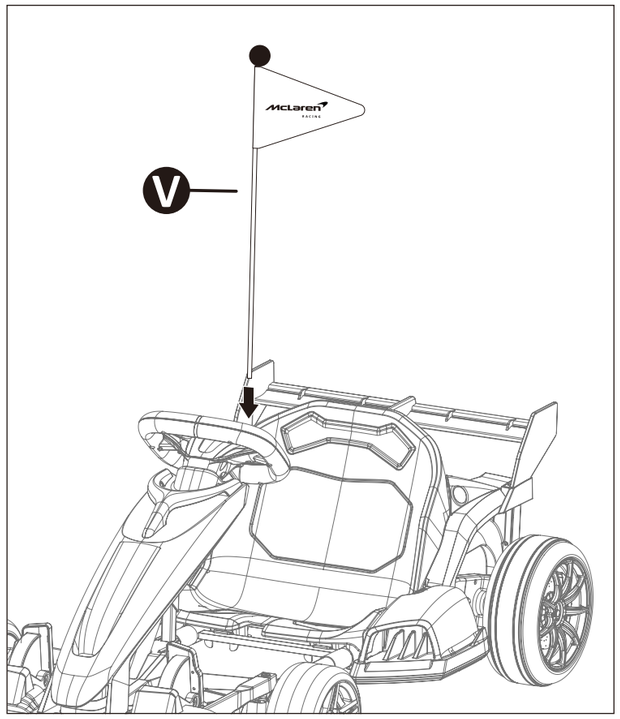


## Step 11: Install the flag

Insert the V (flag) into the round hole of the rear tail wing.

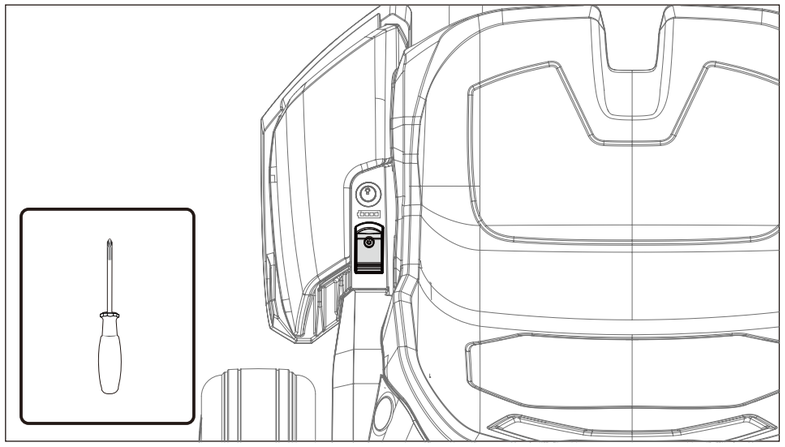

***high/low speed switch***

First, use a screwdriver to loosen the screw, then open the cover and you can use the high and low speed switch.

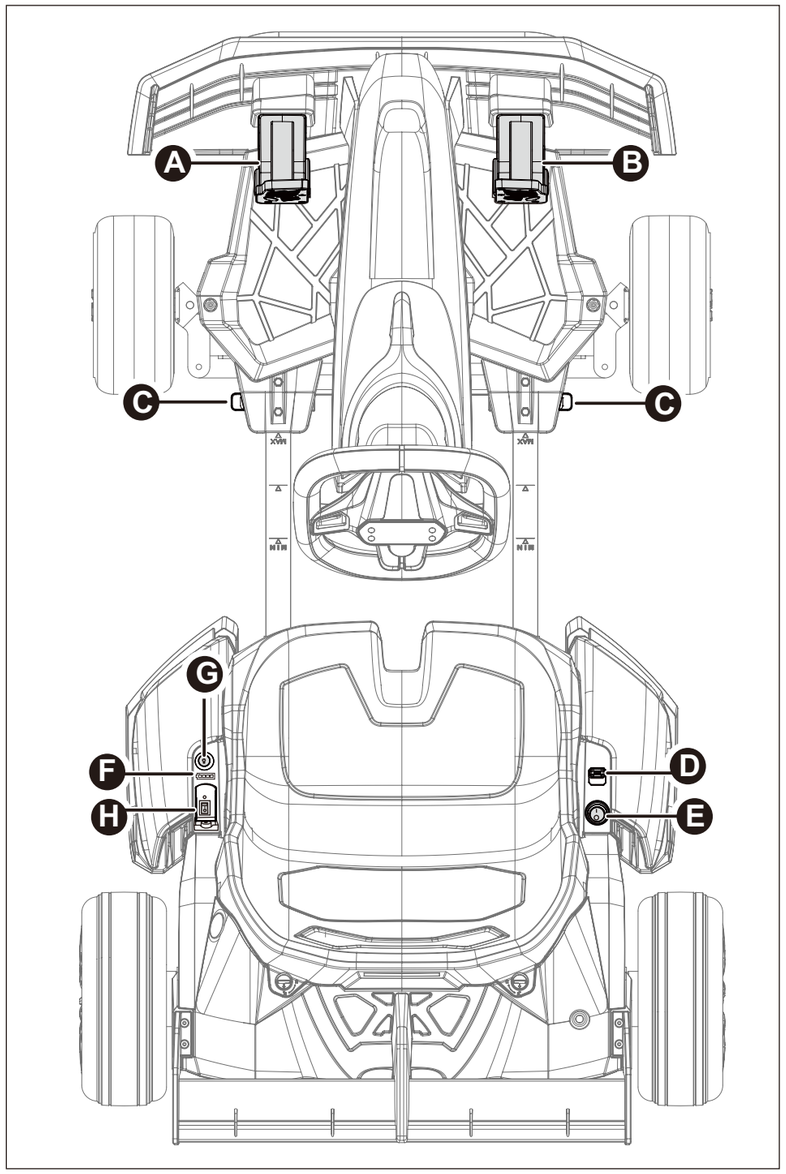


## 1. Instruction of User Switches and Buttons

A. Brake: press the brake to brake the car.
B. Gas pedal : Press the gas pedal forward/reverse, release the gas pedal , the car will come to a gradual stop.
C. Adjustment button. Press it inward to unlock, and press it outward to lock.
D. Forward/reverse switch, push forward is forward, push backword is reverse.
E. Power switch: " | " is turn on, "O " is turn off the power.
F. Power display, (Grids 4 indicate full power; Grids 3 and 2 indicate that the power left; Grids 1 indicates that the power is about to be used up. The last grid flashing indicates that the battery is no power and need be charged.
G. Light switch: Push up to turn on the light, push down to turn off the light.
H. high/low speed switch, "O" is high speed, " | " is low spedd.

**⚠ WARNING**

5 minutes without operation, the car will enter into dormant state, pls press "O" of E( Power switch) to turn off the car, then press " | " of E to restart the car.





## 2. Driving Instructions

You are at a risk of injury when driving a Gokart, please dress properly as shown in the picture. Minors must learn and drive under adult supervision.

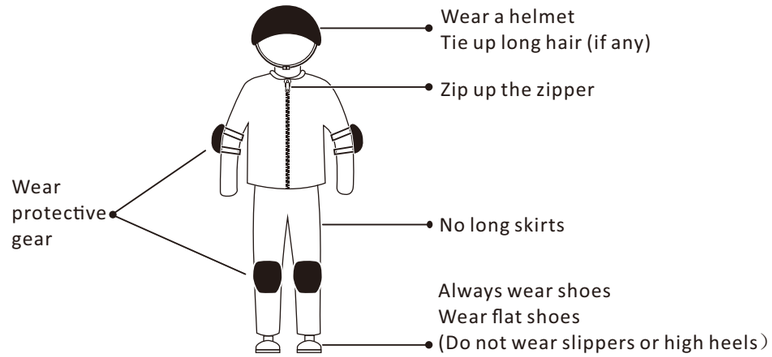


## 3. Operation guide for Manual control (Forward, Reverse ):

Driver sit down and fasten the seat belt. Press the Power switch , The forward/reverse switch to the forward mode, Press the gas pedal, the car will move forward, release the gas pedal, the car will stop. Press the brake ,the car will stop.The forward/reverse switch to the reverse mode, the car will move backward, release the gas pedal, the car will stop. Press the power switch again to turn off the power.

## 4. The illustration of High/Low speed

Power on, default is forward slow mode, press the gas pedal, the car will forward slow, release the gas pedal, the car will stop, press the " 1 " mode button, press the gas pedal,the car will forward at fast speed ,release the gas pedal, the car will stop.

## 5. Precautions for using seat belts

**Fasten safety belt**

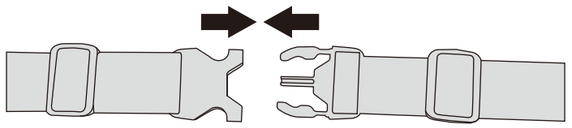

**Unfasten the seat belt**

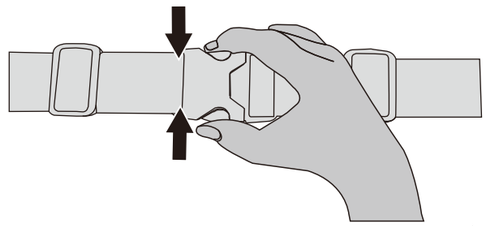

**Adjust the seat belt**

shorten:

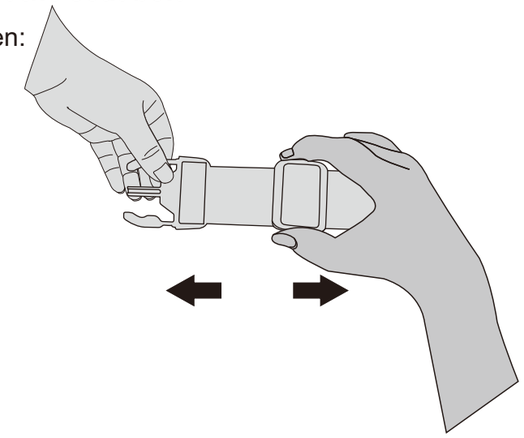

lengthen:

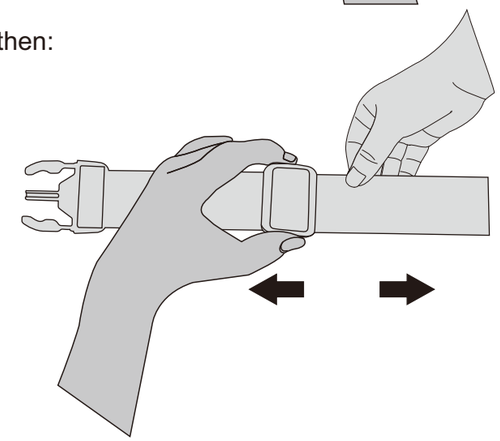

## ❻ How to replace fuse

**When the current exceeds a certain rating, the fuse will blow, please replace the same type of fuse, to restore the function.**

⚠ **WARNING: RISK OF FIRE,** Do not bypass fuse. Use only the replacement **40** A fuses stored on the battery pack.

**NOTE-**Prior to replacing fuse, we recommend that you contact Customer Service to discuss electrical problem.

### USE FUSE 40 A ON BATTERY COVER

Firstly use a flat-head screwdriver to rotate the lock and remove the seat, then remove the battery cover and rear tail component. The fuse is under the battery cover and on the red power line.

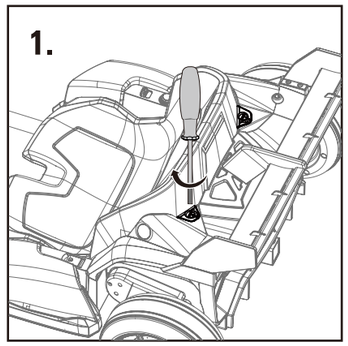


Disconnect the battery with system wire connector .

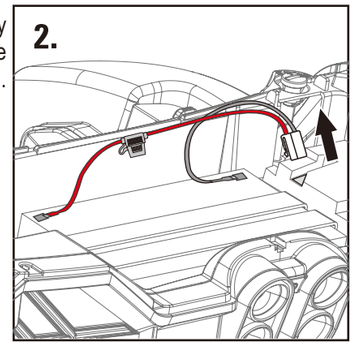


Open the fuse protective cover.

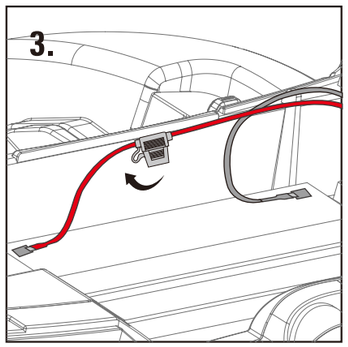


Remove the old fuse.

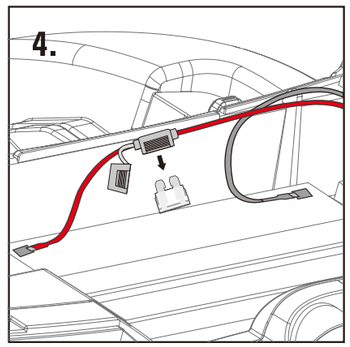


Replace it with a new one of the same specifications. Finally, put the fuse cover back on.

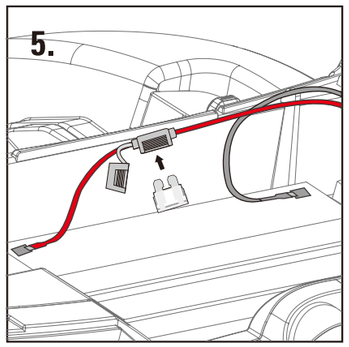


Plug the power terminal into the original receiver position

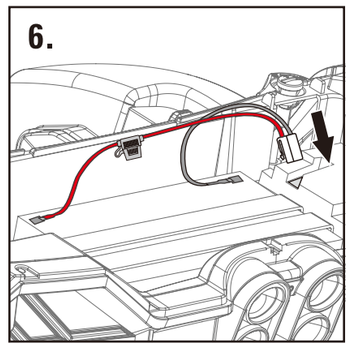


Firstly, install battery cover and rear tail component, then install seat, rotate the lock.

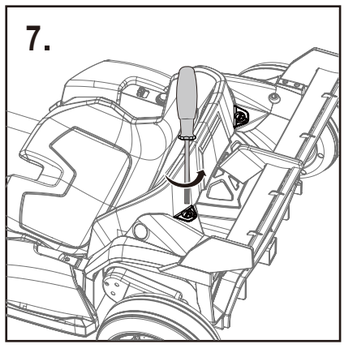




## ❼ Charging Instructions

### ⚠ WARNING!

Please plug wall charger directly into a wall outlet. Do not use an extension cord.

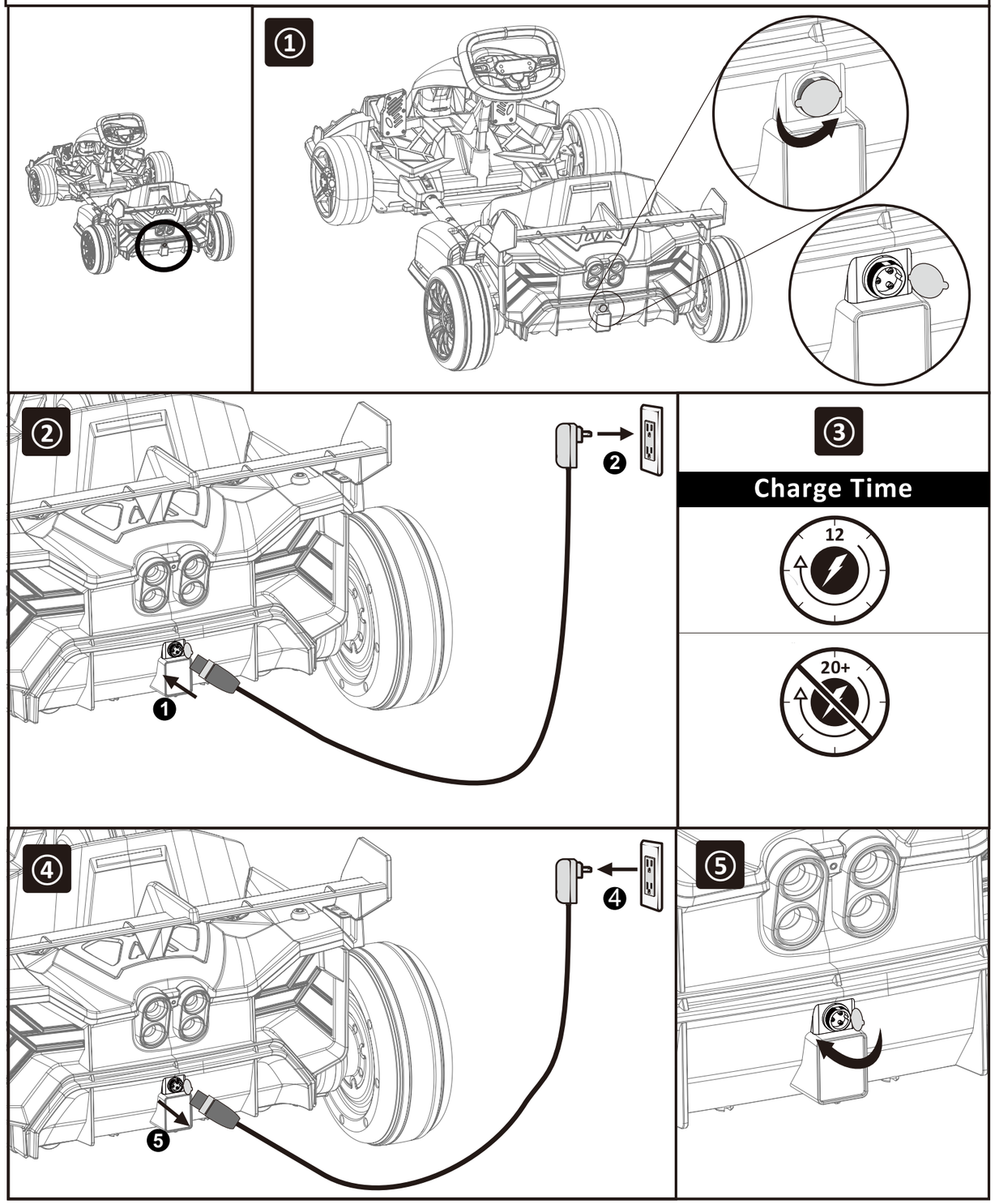


**When the battery is low, please charge it immediately.**

When battery power is low,please charge it immediately. The charging port is behind of the car. (Note: toys can not be operated in the charging state. Toys should be charged under adult supervision ).

## ❽ Attention

1. Operating this kart exposes users to injury risks. While risks can be mitigated (but not entirely eliminated) by adhering to warnings and precautions in the Manual, you must carefully review all prohibitions, warnings, and legal disclaimers outlined in the manual and below.
2. Given the specialized nature of this vehicle, we strongly recommend purchasing insurance immediately after acquisition to minimize operational risks.
3. Users are obligated to understand and comply with all applicable laws in your jurisdiction.
4. All components must be installed strictly according to the Manual. Improper installation may lead to loss of control, collisions, or falls. Always power off the vehicle before installation/maintenance. Apply appropriate force during assembly—excessive tightness or looseness may cause damage or malfunction. Prior to each use, inspect tire integrity, battery level, operational status, assembly specifications, safety straps, electrical control connections, frame stability, and steering wheel alignment. Cease use immediately and contact after-sales service if abnormalities are detected.
5. Operators must be at least 6 years old and under 60 years old. Children under 6 are strictly prohibited from use. **Special Notice to Guardians**: Guardians are fully responsible for minors' safety and must supervise them continuously during operation.
6. Keep small or detachable components away from children to prevent choking or accidental ingestion.
7. Maintain constant vigilance while operating this vehicle. Fatigue, intoxication, illness, or emotional distress strictly prohibit usage. Individuals with visual, auditory, mobility, speech, or motor impairments, or those with cardiac, hypertensive, vertigo, or other exercise-restrictive conditions, must avoid operation. Do not use this product when taking drugs or drinking alcohol.
8. There are harmful substances in the battery, please do not attempt to destroy or disassemble the battery.
9. Ensure sufficient battery charge before use. Low/empty battery levels may compromise safety due to inadequate power. malfunctions and safety hazards. For any issues, contact our after-sales support for the best assistance.
10. Never charge the vehicle with wet ports. Use only compatible power outlets (100V-240V/50Hz-60Hz). Keep charging devices away from children, pets, and flammable materials.
11. You need to be familiar enough with the operation of the car to be able to operate it outdoors. The more you practice, the safer you will be when driving in new situations. Novices should practice under professional supervision. Only proceed to public areas (where legally permitted) after demonstrating precise control in confined spaces and simulated terrains.
12. Immediately discontinue use if the vehicle emits odors, smoke, abnormal heat, or exhibits component failures.
13. Inspect tire condition before each use. Worn or damaged tires may affect your normal driving or even cause accidents. Avoid physical contact with tires during operation.
14. Mandatory safety gear includes:
    - Full-face motorcycle helmet with chin strap
    - Goggles
    - Protective boots and gloves
    - Long riding pants with hip/knee pads
    - Long-sleeved riding jacket with elbow/shoulder/chest protection
15. Do not wear high heels or loose clothing while driving this vehicle. Long hair or bangs that may obstruct vision should be tied up. Loose clothing, hair, or accessories may get caught in the wheels, posing a hazard, or obstruct the driver’s view, increasing the risk of accidents.
16. It is recommended to wear protective glasses while driving to shield against dust, debris, and insects. Use darker lenses in bright conditions and lighter, more transparent lenses in low-light environments.
17. This vehicle is equipped with multiple safety protection features (e.g. short-circuit protection). If the vehicle activates a protection mode, please stop driving immediately. Only resume operation after resolving the issue or eliminating unsafe conditions.
18. Never submerge the battery or vehicle in water, expose it to rain, or drive in the rain. Avoid using high-pressure water jets or hoses to clean the vehicle, as this may cause water damage to the battery compartment or circuitry. If the vehicle has been exposed to heavy rain or prolonged wet conditions, wipe it dry with a soft cloth, stop using it immediately, and contact after-sales service. Do not attempt any repairs or modifications yourself, as improper handling may void the warranty.
19. Do not drive this vehicle in rain or snow. When not in use, store it indoors to prevent water damage. Wet or slippery roads significantly reduce braking performance (for both this vehicle and other road users) and tire traction, making speed control more difficult and increasing the risk of losing control.
20. Do not drive under the following conditions: severe weather, low visibility (e.g., dawn, dusk, nighttime, or darkness), or extreme fatigue. These conditions substantially increase accident risks. Night driving is far more dangerous than daytime—drivers and pedestrians may not notice you. If you must drive in low visibility, be mentally prepared for higher risks and take extra precautions in driving and safety gear to mitigate dangers.
21. Do not drive this vehicle on public roads unless explicitly permitted by local laws. If road use is allowed, strictly follow all traffic regulations, including direction of travel.
22. Drive only on well-maintained, smooth surfaces. Avoid rough or uneven terrain.
23. Do not drive on slopes steeper than 15 degrees.
24. Do not drive through standing water deeper than 2 cm.
25. Avoid driving in areas that may impair safety, including:
    - Roads with vehicular traffic
    - Proximity to slopes, stairs, or swimming pools
    - Any location where normal operation could be compromised
26. Exercise caution when driving over obstacles, uneven ground, slippery surfaces, loose terrain, or steep slopes. Loss of control may lead to collisions, falls, or injuries.
27. Be mindful of terrain transitions, such as from pavement to grass.
28. Avoid reckless maneuvers. Stay alert to potential hazards, especially on muddy or wet surfaces. If encountering unfamiliar terrain (e.g., steep slopes or rough paths), prioritize safety and do not attempt risky crossings.
29. Ensure visibility for yourself and others while driving.
30. Always be aware of collision risks with pedestrians, motorcycles, cars, or other vehicles. Slow down and yield at intersections, turns, or doorways. Adopt a defensive driving mindset—watch for others, even if you have the right of way.
31. Always be prepared for the following situations:
    - Vehicles entering intersections or turning unexpectedly
    - Opening car doors
    - Children or pets near roads
    - Potholes, sewer grates, cracks, or other road obstacles
    - Any distraction that could compromise safety



## ❽ Attention

32. Drive at a reduced speed and avoid overtaking. Be extra cautious when reversing or making a U-turn.
33. Be careful when turning! Avoid braking or accelerating while turning, as sharp turns can lead to loss of control. Slow down when approaching intersections, turns, or entrances to yield to pedestrians, bicycles, and vehicles.
34. To avoid distractions while driving, do not make phone calls or engage in activities that divert your attention. Stay focused on your surroundings.
35. Avoid sudden braking, especially on slippery surfaces, as it may cause a loss of traction and increase the risk of accidents.
36. Do not get on or off the vehicle until it comes to a complete stop. Ensure you do not obstruct other vehicles or pedestrians.
37. Maintain good judgment while driving. Operate within your skill level and avoid performing stunts.
38. This vehicle is not a medical device. Only individuals capable of driving independently should operate it.
39. Do not use this vehicle for cargo transportation.
40. Do not throw, drop, or expose the product to open flames.
41. Avoid driving alone in remote or uninhabited areas. Even when driving with others, inform someone of your destination and estimated return time. Ensure help is available in case of an emergency.
42. Do not store the vehicle in temperatures above 50°C or below -20°C.
43. Summer Use: Store the vehicle in a safe place where the temperature does not exceed 50°C. Avoid prolonged exposure to direct sunlight.
44. Winter Use: Store the vehicle in a safe place above -20°C. If the storage temperature is below 0°C, place the vehicle in a warm environment (above 10°C) before charging.
45. Unauthorized modifications may compromise safety. Do not modify the vehicle.
46. Use only original parts designed for this vehicle model. Using unauthorized components may lead to malfunctions and safety hazards. For any issues, contact our after-sales support for the best assistance.
47. Specifications and parameters may vary by model and are subject to change without notice.

## ⑨ Troubleshooting Guide

| Fault type | Reason analysis | Trouble elimination methods |
|---|---|---|
| The motor does not rotate | 1. Is the fuse overloaded?<br>2. The pedal switch connector is good?<br>3. The welding of motor electric terminal is good?<br>4. The connector of the motor wire is good.<br>5. Remove the motor's plug-in, change to connect battery directly, then check if it rotate or not. | 1.Yes, the fuse cuts off the power automatically by 5-20 seconds, then restart; No, check next reason analysis<br>2.No, repair foot switch ; Yes, check next reason analysis<br>3. No, weld the terminal wire ; Yes, check next reason analysis<br>4.No, plug in the plug-in ; Yes, check next reason analysis<br>5.Still no rotation, change the motor; If rotates, it means driving circuit board needs professional maintenance, please contact with agent |
| Only move frontwards, or only move backwards | 1. Check the frontward/backward switch, check the connector is good or not by multimeter<br>2. Check the drive line cycle of frontward/bckwards is workable or not? | 1.No, replace the control board;<br>Yes, check next reason analysis<br>2.No, connect the line; Yes, it means driving circuit board needs professional maintenance, please contact with agent |
| slow speed | 1. Check the battery voltage is ok or not.<br>2. Connect the motor (including the driving gearbox) to the battery, then check the speed can be accelerated or not. | 1.No, charger the battery ; Yes it's ok, check next reason analysis<br>2. No, check next reason analysis ; Yes, it means driving circuit board needs professional maintenance, please contact with agent |
| The battery can not be recharged | 1. The battery connector fall off or loosened.<br>2. The charger has a slight heat when it is charged | 1. Yes, reconnect it, No, check next reason analysis<br>2.No, the charger is broken, replace it |
| When car is moving, the sound and light are useless | 1. check the sound/light switch is ok or not.<br>2. check the electric wire connection (from battery to headstock) is good or not? | 1.No, replace the control board; Yes, check next reason analysis<br>2. No, reconnect; Yes, check next reason analysis |
| When wheel running, the car does not move | 1. check the driving wheel can be rotated or not?<br>2. Check the gearbox, if any gear is damaged? | 1.Yes, lay the wheel to the ground; No, checks the next reason analysis<br>2.Yes, replace the gear box; No, checks the next reason analysis |
| Car is unstable, moving on and off | 1. Does the driver exceed the maximum load weight?<br>2. Does the driver ride on the rugged road?<br>3. Check the wheel can rotate freely? | 1.Yes, should follow the instruction, the car unsuitable for exceed max weight; No, check the next reason analysis.<br>2.Yes, should follow the instruction, ride on the flat cement road; No, check the next reason analysis.No; Troubleshooting wheel and axle.<br>3.Slightly loosen wheel axle nut if the wheel does not spin freely. |