ASSEMBLY INSTRUCTIONS

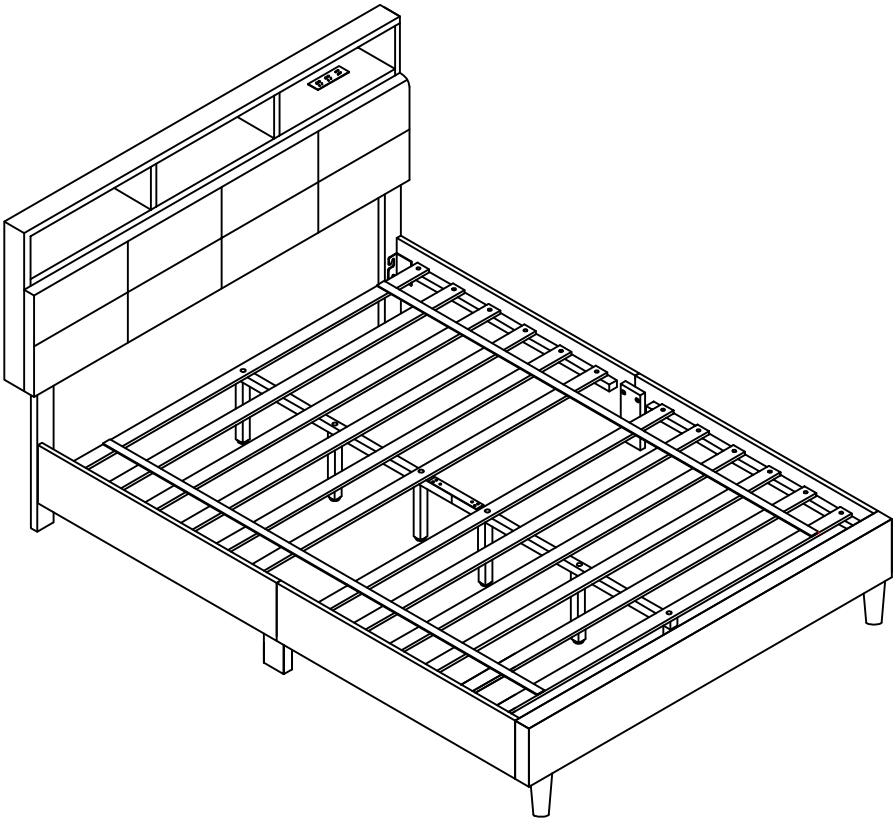

TOOLS REQUIRED

Allen Wrench

(Included)

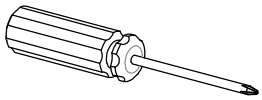

Phillips Screwdriver

(Not Included)

3 - People Recommended

ASSEMBLY RATING

EASY ——► DIFFICULT

The Assembly Rating is a 5-point system showing the level of effort needed to assemble a specific product.

CHECK BEFORE STARTING

- [ ] **Are you missing anything?**

  Double-check all parts, hardware and accessories listed on Page 6 are accounted for.

- [ ] **Should we send any replacements?**

  Are there any irregularities or flaws in the parts? We can send replacements!

- [ ] **Check out our Quick Tips!**

  We recommend reviewing the pre-assembly handouts. Even experts need a refresher now and then!

- [ ] **Prep Time!**

  Please review the assembly instructions and all diagrams prior to assembling. Arrange parts as recommended on Page 7 and group identical hardware together to make assembling easier.

PRE ASSEMBLY INTRODUCTION

We understand building ready-to-assemble furniture can be a challenging experience for some. To help avoid confusion, we have provided some helpful tips that may speed up the process.

Teamwork

ALWAYS have at least two people to help with transporting and assembling the product to avoid potential injury and/or damage.

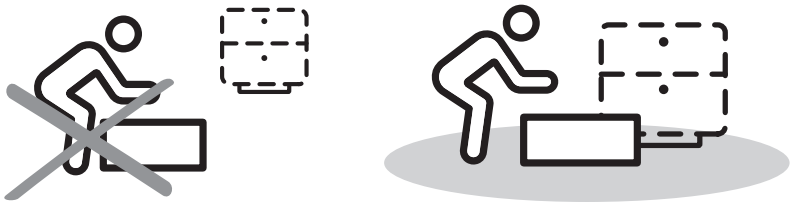

Suitable Location

Assembling near the area of the intended location is highly recommended.

Sufficient Space

Make sure you have enough space to move around during the assembly.

Avoid Scratches

Use cardboard, blankets or a carpeted area while assembling furniture to prevent scratches.

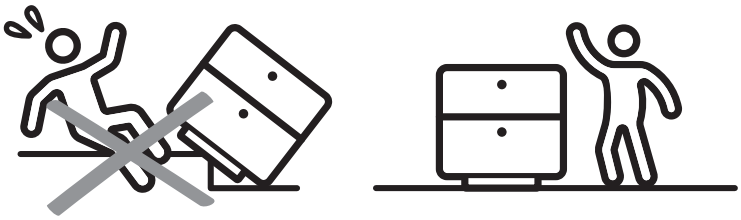

Flat Surface

Make sure the furniture rests on a flat and level surface with each leg evenly touching the floor.

ASSEMBLY AND CARE ADVICE

FAILURE TO FOLLOW THE GUIDELINES BELOW MAY RESULT IN INJURY AND/OR PROPERTY DAMAGE.

Position each part correctly and insert screws or bolts into their respective holes.

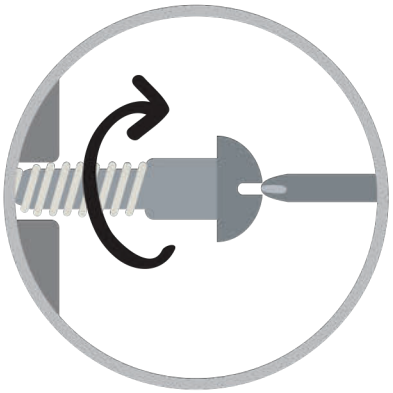

Turn clockwise to tighten and only tighten when step is completed or when instructed to do so.

Use the appropriate hand tools or power tools for assembly. Select steps, such as tightening screws and/or bolts, may require hand tools to avoid causing damage during assembly.

Save the instructions and store any supplied tools for later maintenance.

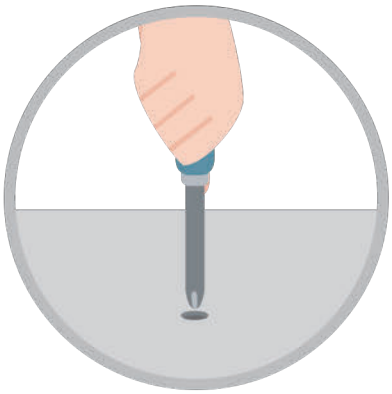

After two weeks, check and tighten any loose hardware and repeat again every six months thereafter.

IT IS THE USER'S RESPONSIBILITY TO MAINTAIN THE FURNITURE. THE HARDWARE MAY LOOSEN OVER TIME AND MAY CAUSE THE FURNITURE TO BE WOBBLY AND UNABLE TO SUPPORT ITS INTENDED WEIGHT CAPACITY. THIS MAY LEAD TO COLLAPSE AND MAY CAUSE SERIOUS INJURY.

BED

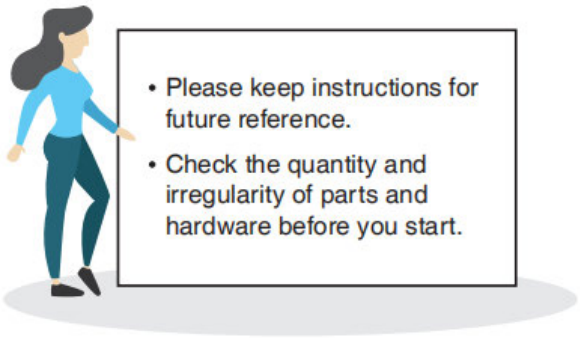

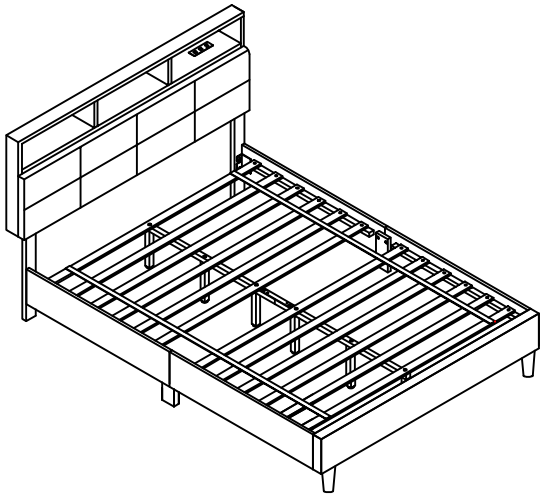

PARTS

#1 1pc

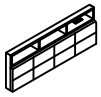

Headboard Panel

#2 1pc

Footboard

#3 2pcs

Side Rail A

#4 2pcs

Side Rail B

#5 2pcs

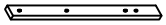

Headboard Leg

#6 2pcs

Footboard Leg

#7 6pcs

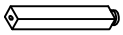

Support Leg

#8 2pcs

Center Support Tube

#9 2pcs

Side Rail Support panel

#10 1Set

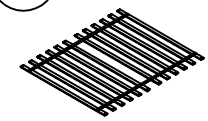

Slat (12pcs)

#11 4pcs

Side Rail Support Bar

BED

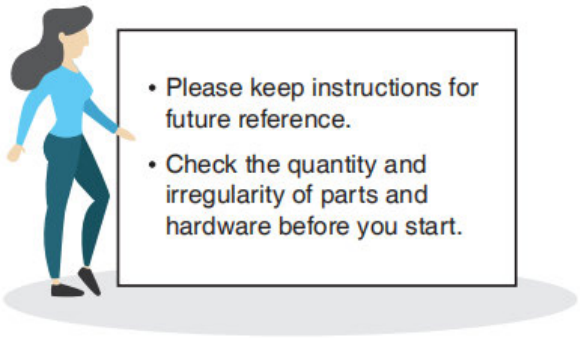

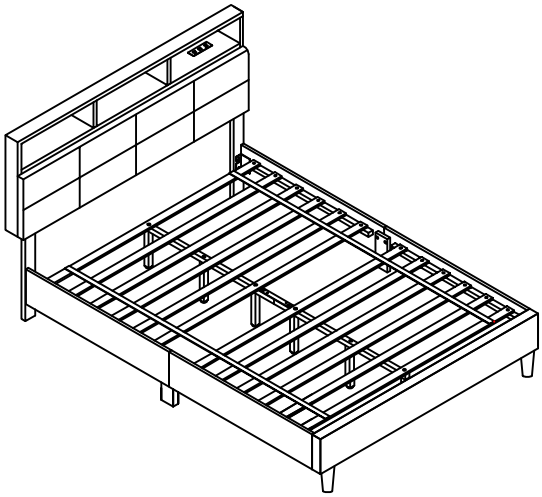

HARDWARE

#A 16pcs

Bolt 5/16" x 1-3/8"

#B 10pcs

Bolt 5/16" x 2-5/8"

#C 12pcs

Bolt 5/16" x 2"

#D 38pcs

Lock Washer

#E 38pcs

Flat Washer

#F 24pcs

Screw 25mm

#G 1pc

Allen Wrench

#H 1pc

Connect plate

#I 12pcs

Screw 20mm

ASSEMBLY INSTRUCTIONS

1

Part #1 x1pc
Part #5 x2pcs
Hardware #B x4pcs
Hardware #D x4pcs
Hardware #E x4pcs
Hardware #I x6pcs

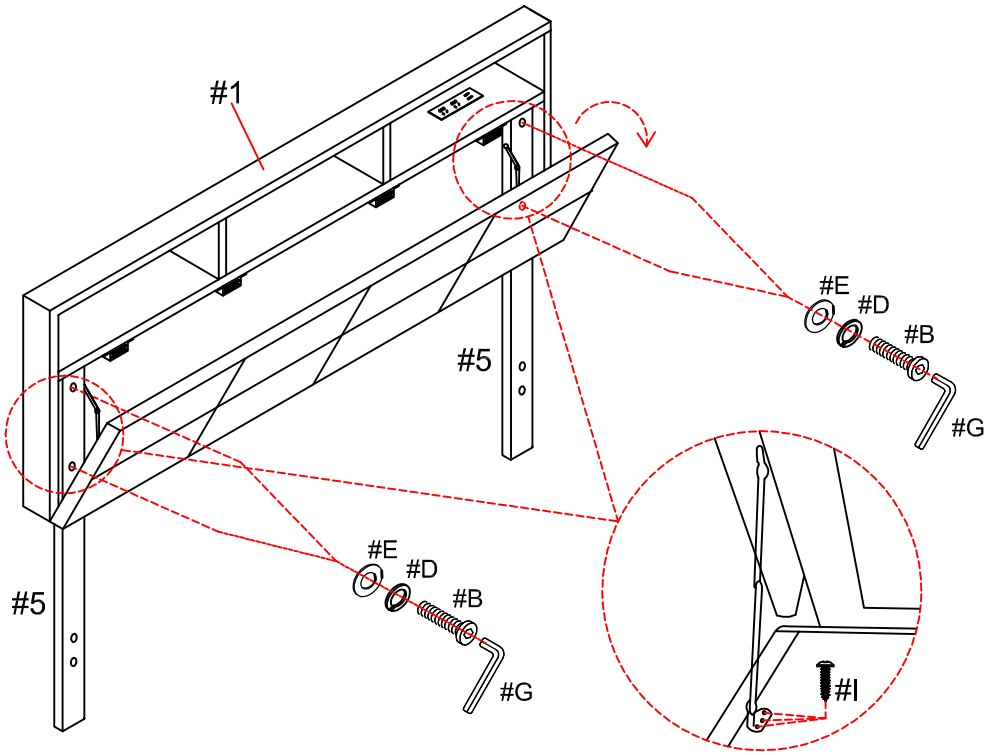

2

Part #2 x1pc
Part #6 x2pcs

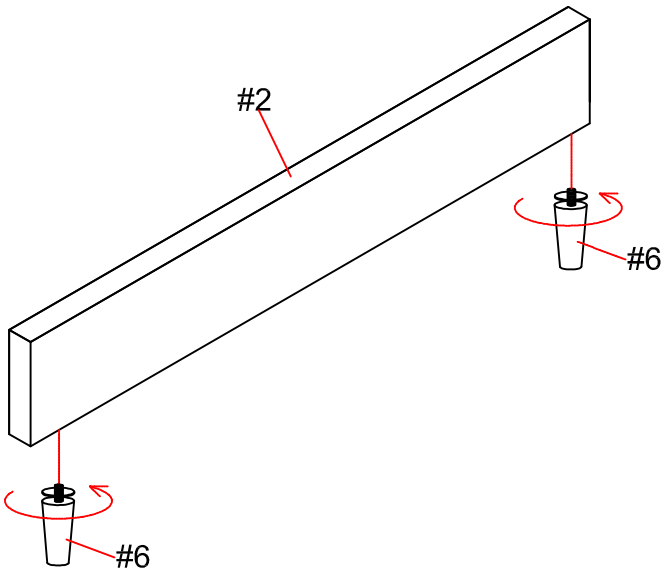

ASSEMBLY INSTRUCTIONS

3

Part #3 x2pcs
Part #4 x2pcs
Hardware #A x 8pcs
Hardware #C x 12pcs
Hardware #D x 20pcs
Hardware #E x 20pcs

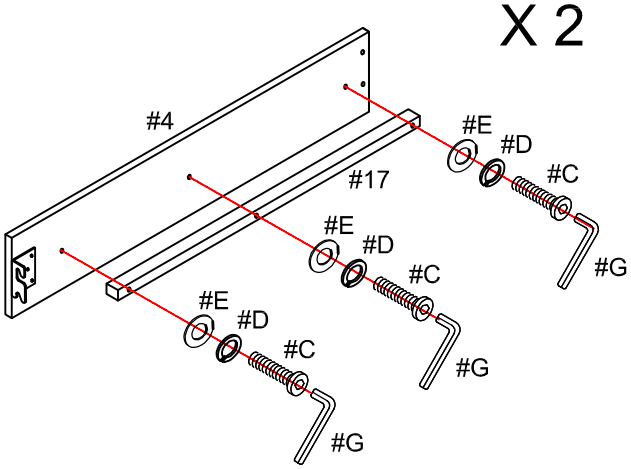

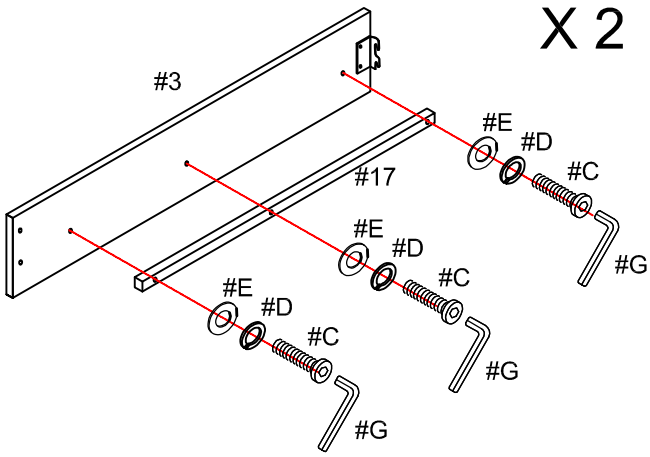

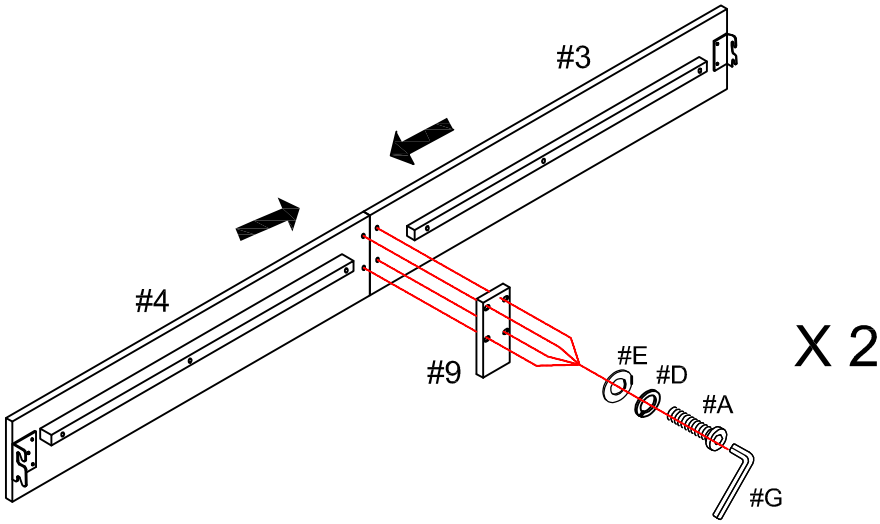

ASSEMBLY INSTRUCTIONS

4

Hardware #A x 8pcs
Hardware #D x 8pcs
Hardware #E x 8pcs

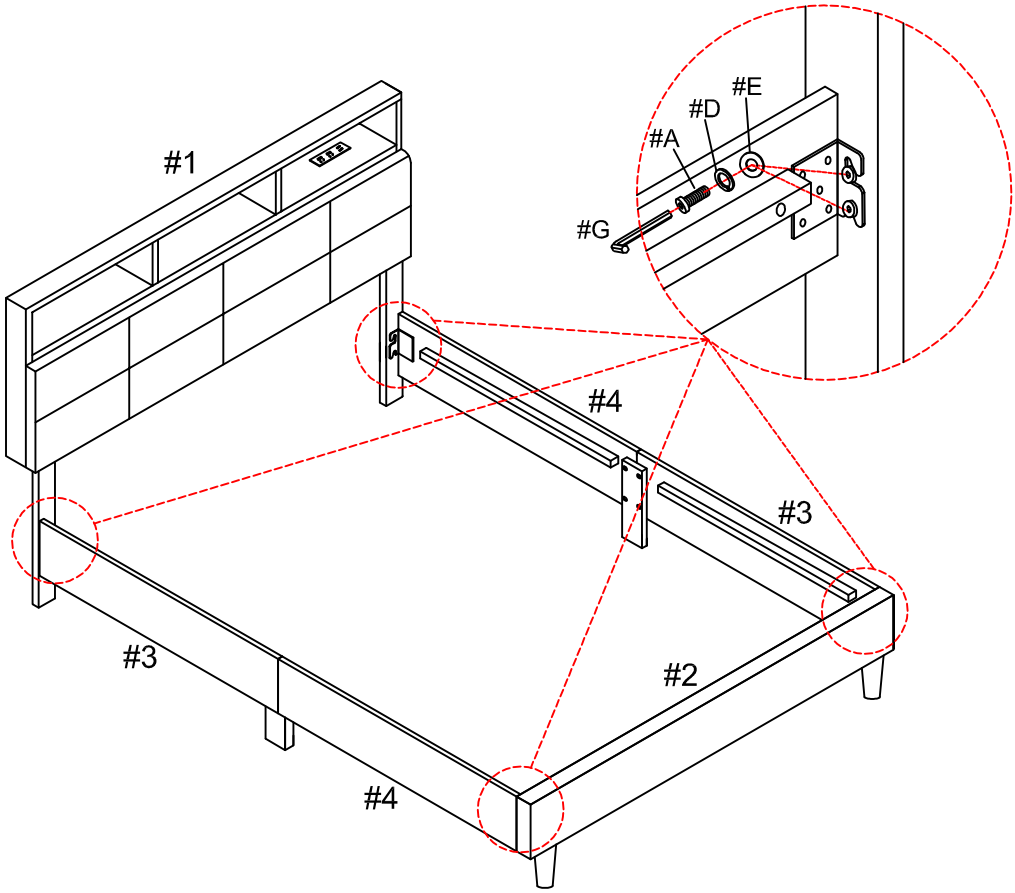

5

Part #7 x2pcs
Part #8 x2pcs
Hardware #B x 2pcs
Hardware #D x 2pcs
Hardware #E x 2pcs
Hardware #I x 6pcs
Hardware #H x 1pc

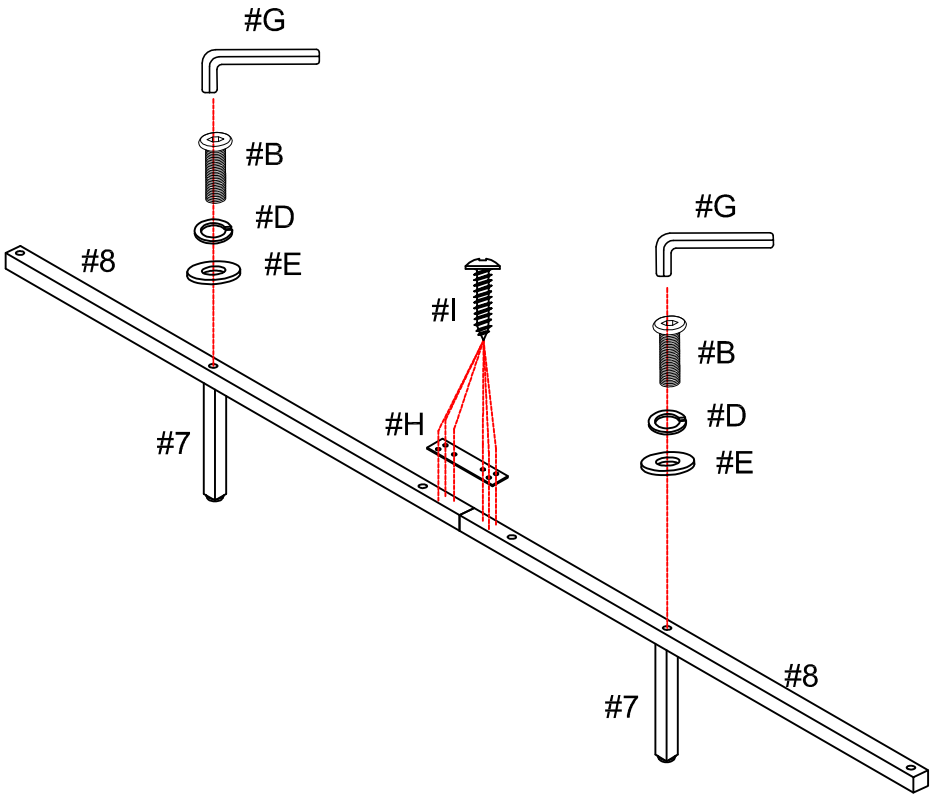

ASSEMBLY INSTRUCTIONS

6

Part #7 x4pcs
Part #10 x1Set
Hardware #B x 4pcs
Hardware #D x 4pcs
Hardware #E x 4pcs

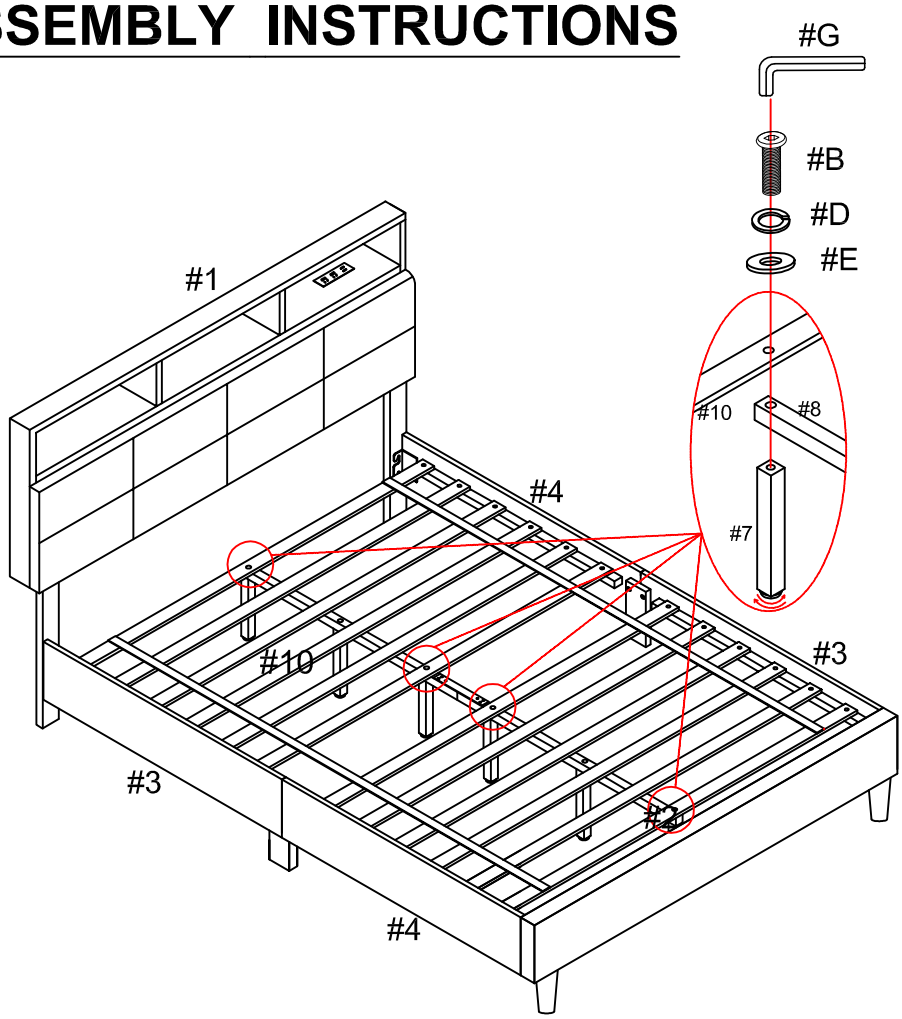

7

Hardware #F x 24pcs

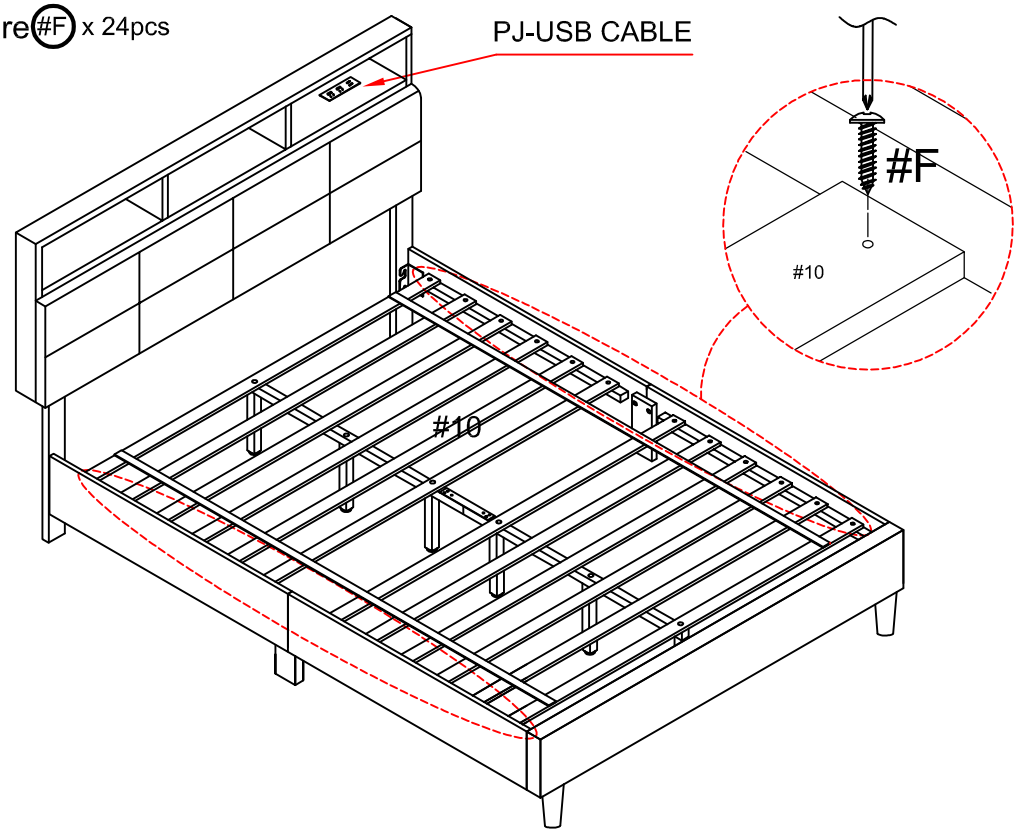

ASSEMBLY INSTRUCTIONS

8

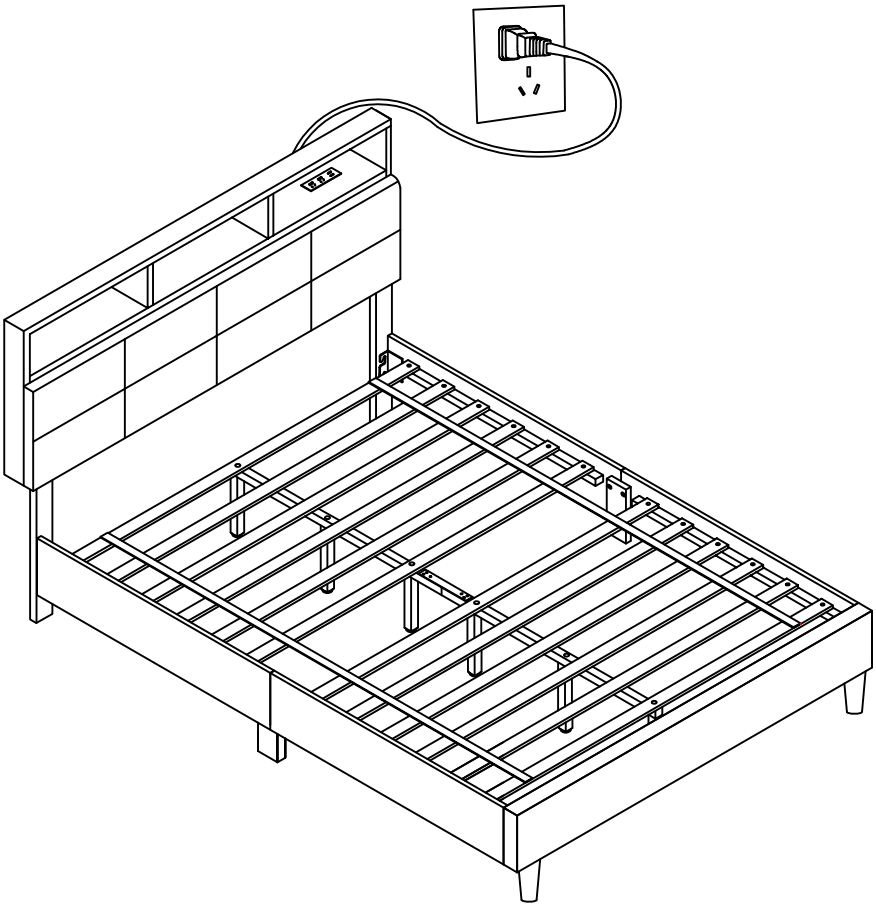

ASSEMBLY COMPLETED

Please ensure the furniture rests on an even and flat surface. If the product wobbles or feels loose, double-check all bolts and/or screws are properly tightened and secured.

Keep this handy!

Please retain this instruction manual and any order-related information for future reference.

Lift, don't drag!

To avoid damage to product please always LIFT the product when transporting of adjusting the placement.