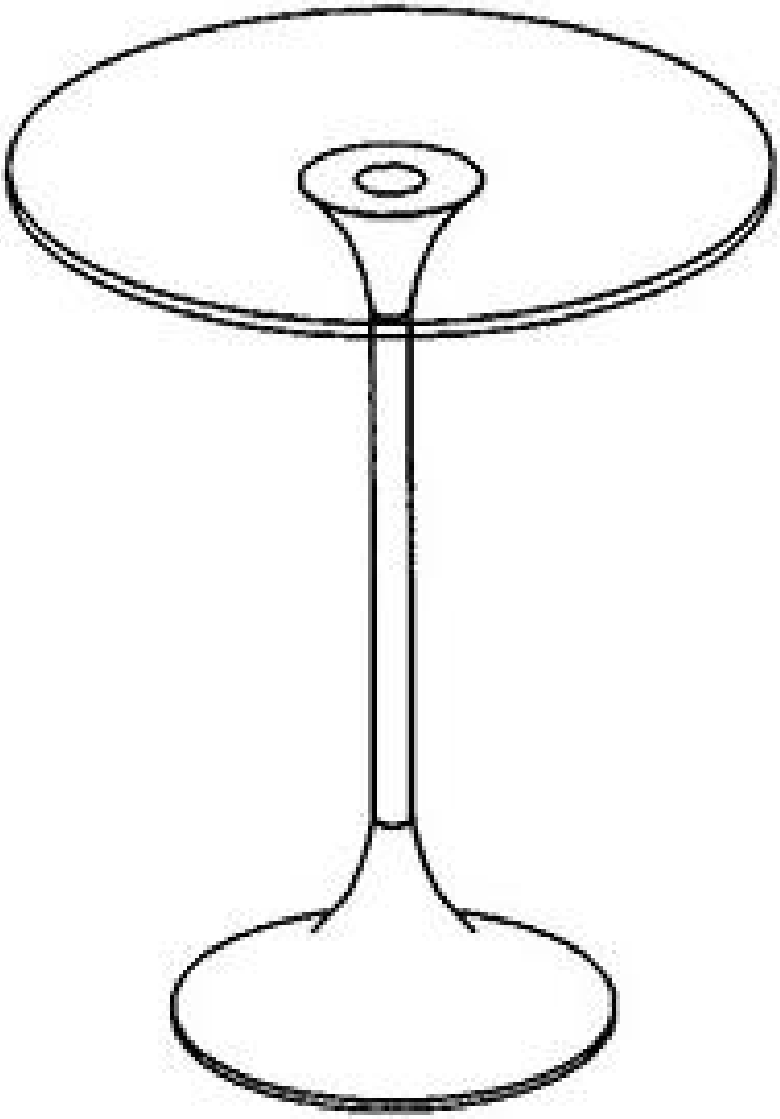

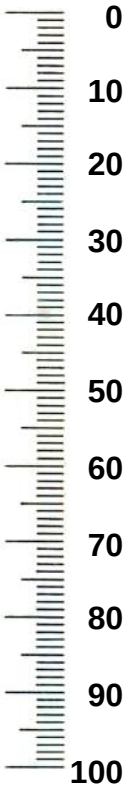
0
10
20
30
40
50
60
70
80
90
100

1-1x	3-1x	5-1x	B-1x 8x93mm	D-2x
2-1x	4-1x	A-1x	C-2x	E-4x

1

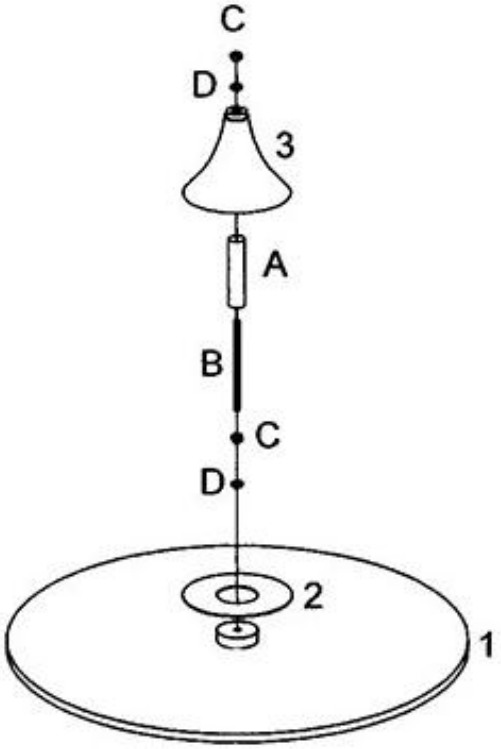
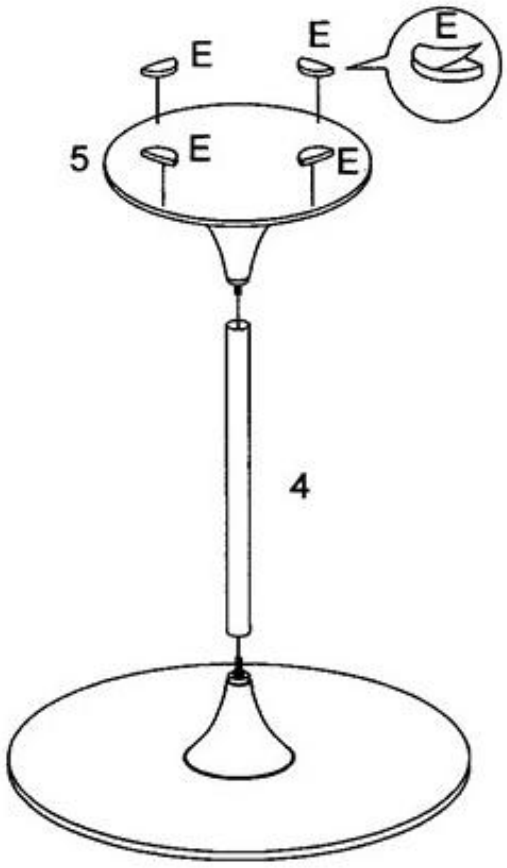
2