Warranty

The warranty covers defects in material and workmanship for a period of 1 year from the date of purchase. The original purchase receipt is required as proof of purchase. This warranty is limited to the replacement of defective parts.

This warranty does not cover normal wear and tear, scratches, alterations and intentional and non-intentional damages.
This warranty does not cover the product if it has been placed outdoors or in a humid environment.
This warranty is only valid for purchases made at an authorized dealer in Canada and in the United States.

This warranty defines the limits liability and entitles the original buyer to specific rights. Any warranty defined by law in your state or province is limited to a period of 1 year. If the law in your state or province prohibits this restriction, then it does not apply.

Platform bed 54" or 60"
W3300.54 et/ and W3300.60
Lit plate-forme 54’’ ou 60’’

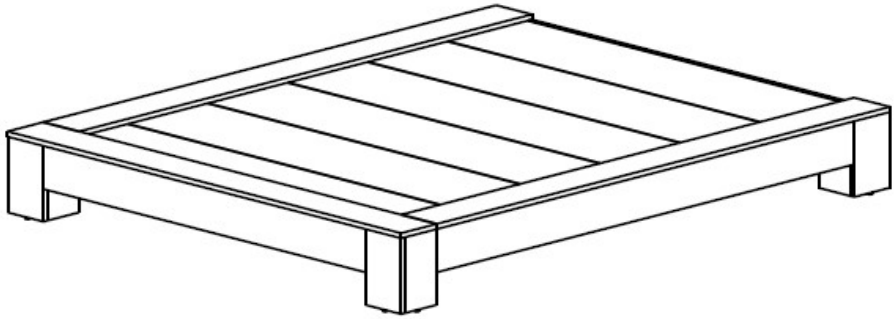

IMPORTANT
- Read the instructions before starting assembly
- Identify parts (each piece is numbered at one end)
- Be sure holes are dust free
- Be sure that all hardware is present
- Keep away from children (sharp pieces)

IMPORTANT
- Lire les instructions avant de commencer l’assemblage
- Identifier les pièces (chaque pièce est numérotée à une extrémité)
- S’assurer que les trous sont libres de poussière
- Vérifier que toute la quincaillerie est présente
- Tenir les pièces loin de la portée des enfants (pièces pointues)

A	Q002	99X
B	Q015	99X
C	Q017	18X

D	Q068	12X
E	Q055 1⅛" T.R.W.	41X
F		18X

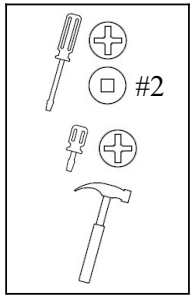

- La base de lit zen 54" est représentée dans ce guide, mais la méthode d'assemblage est la même pour la base de lit zen 60".
- The 54" zen bed base is represented in this manual, but the assembly is the same for the 60" zen bed base.

1 (2X)

A		20X
B		8X

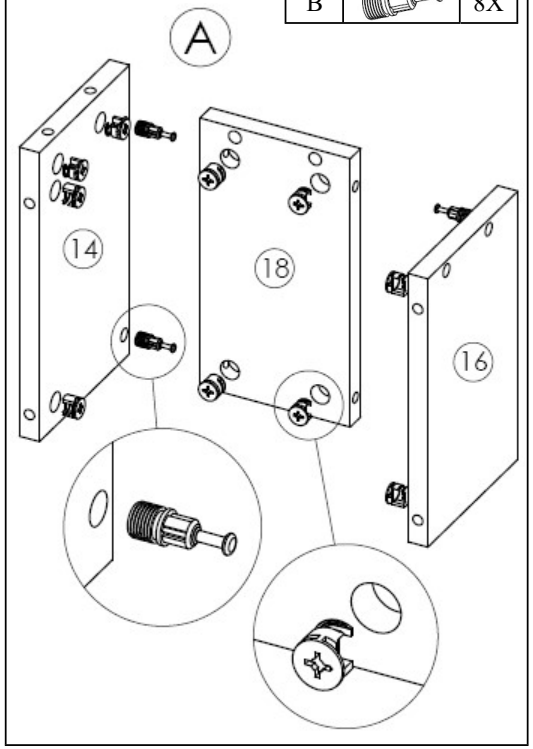

2 (2X)

A		4X
B		8X

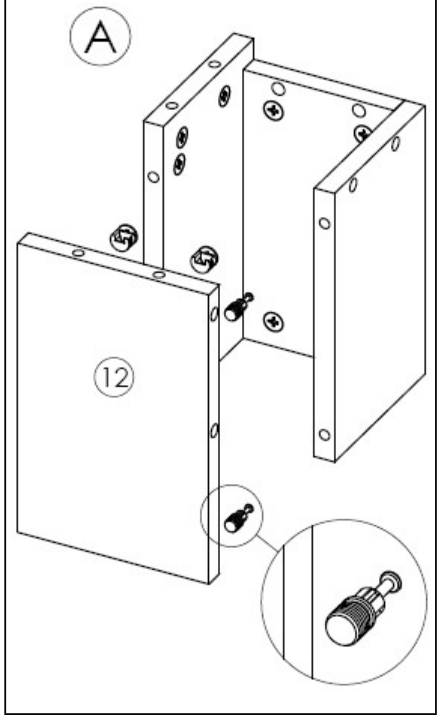

12

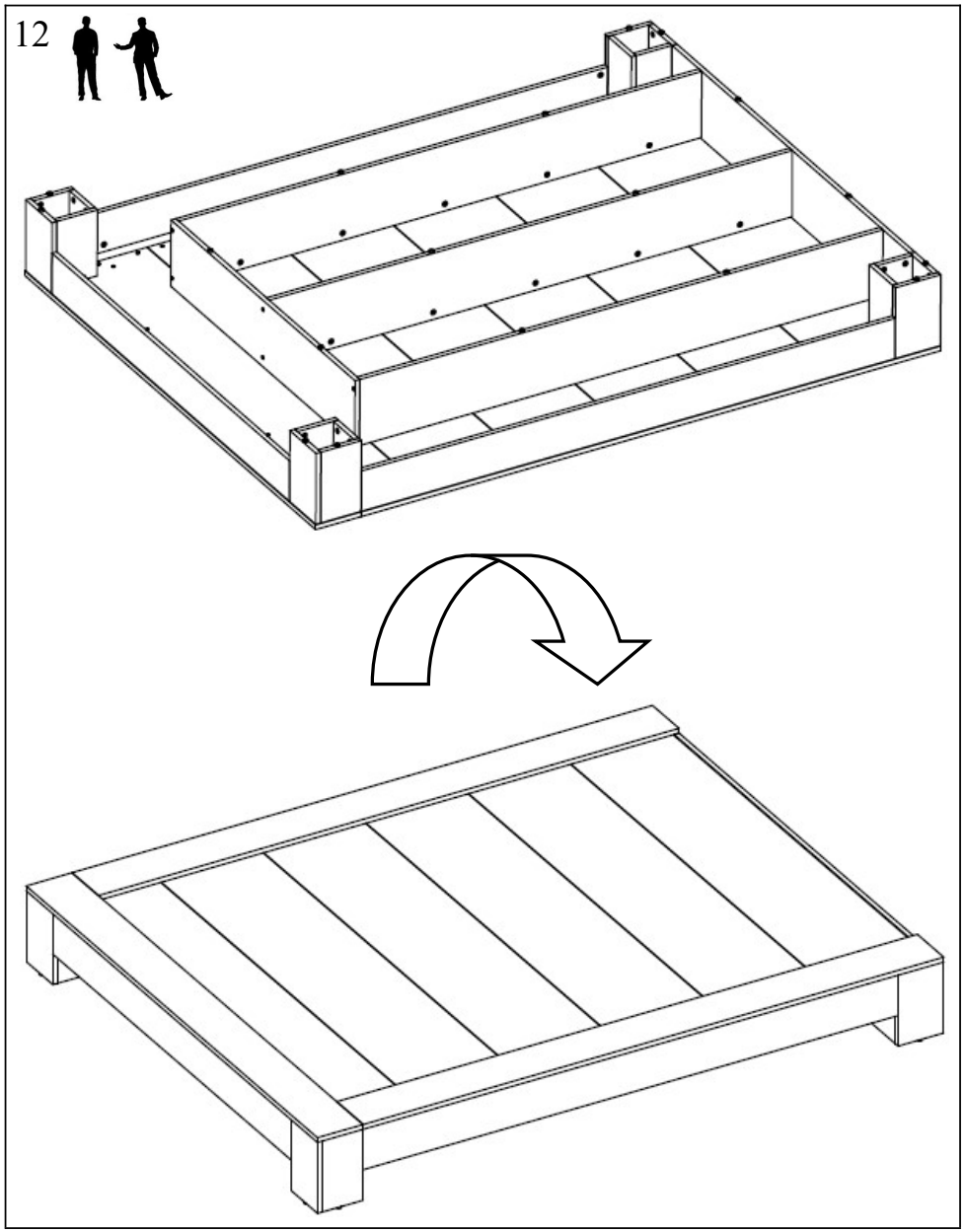

10

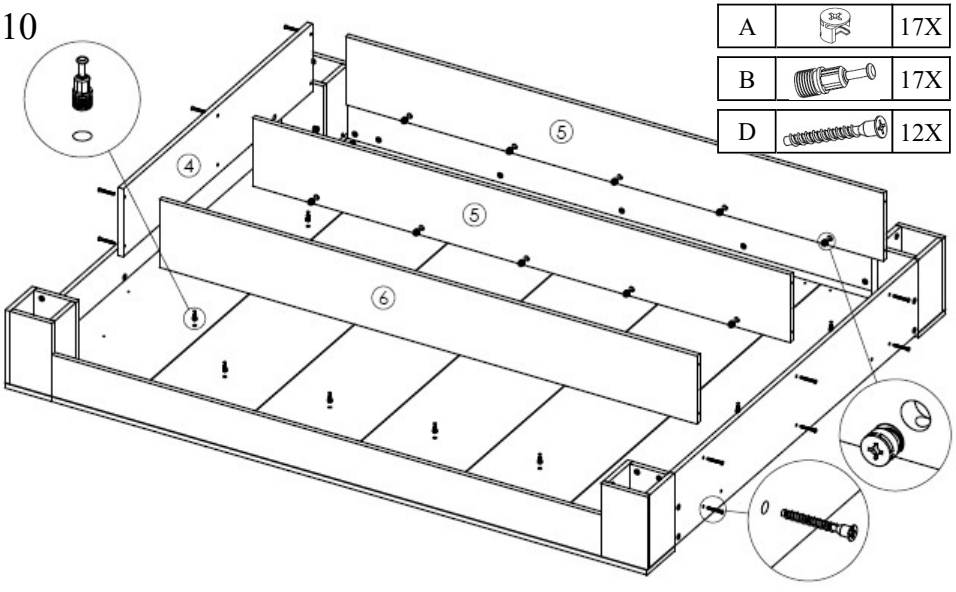

11

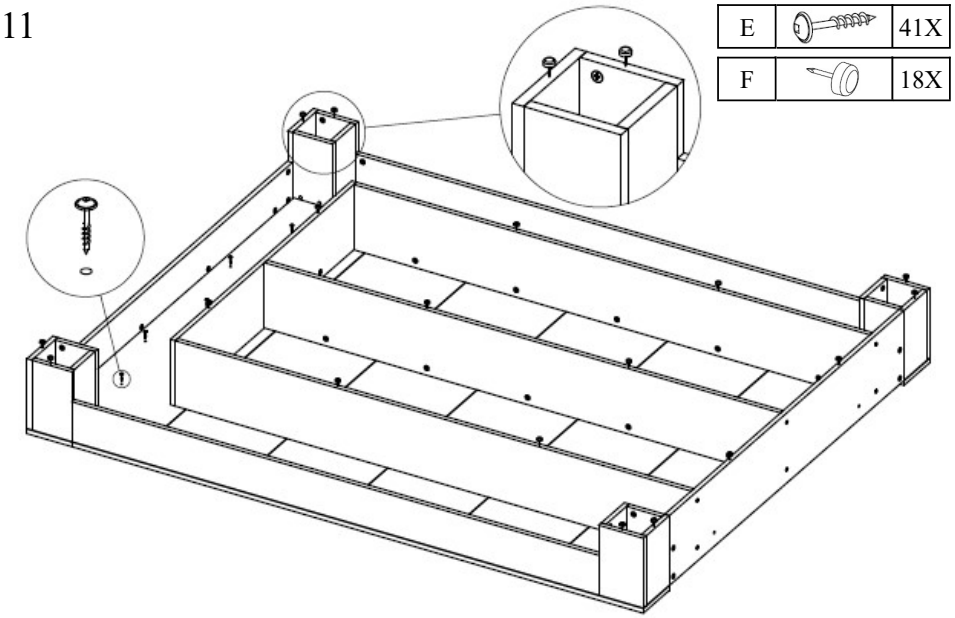

3 (2X)

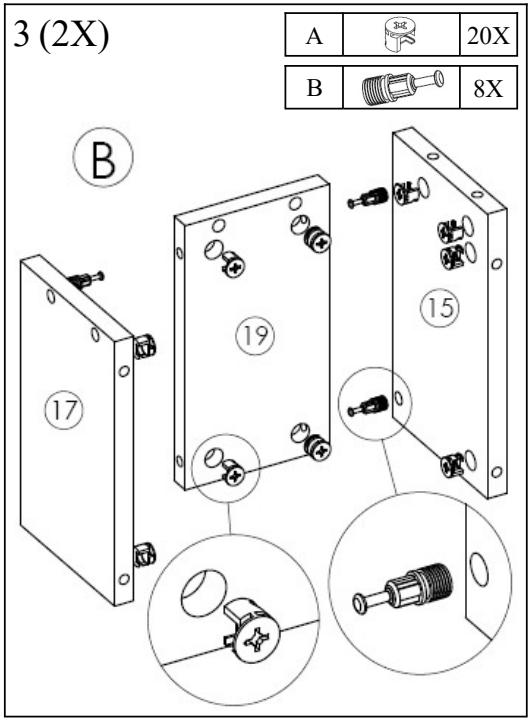

4 (2X)

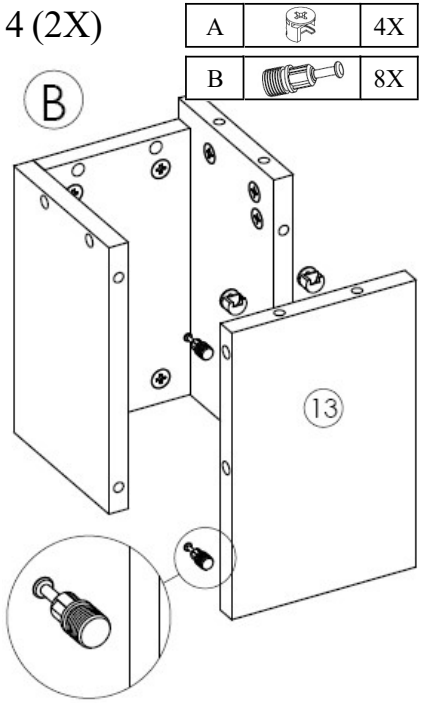

5

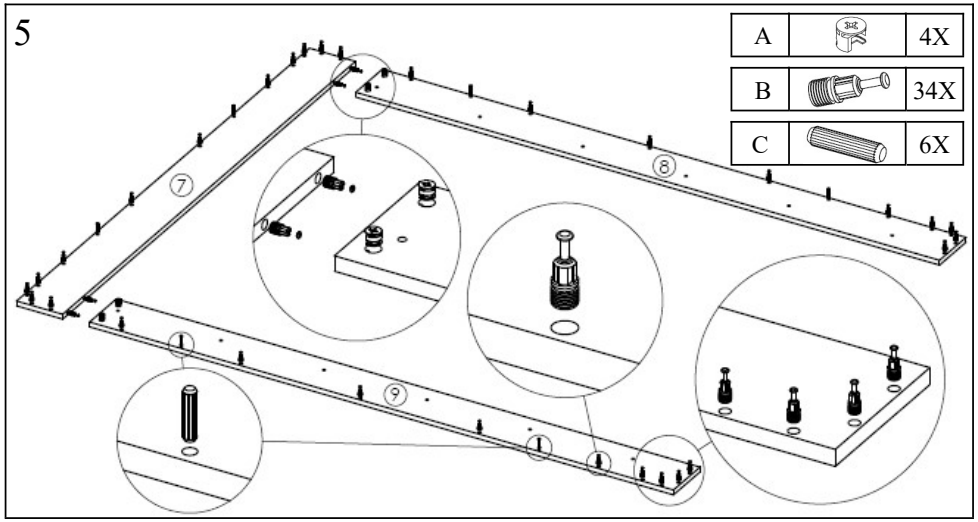

6

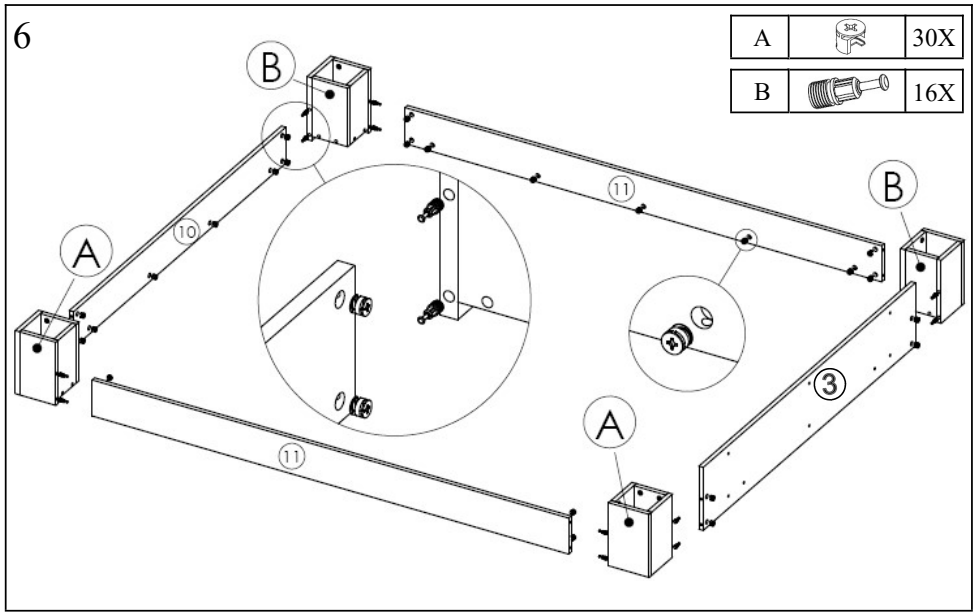

7

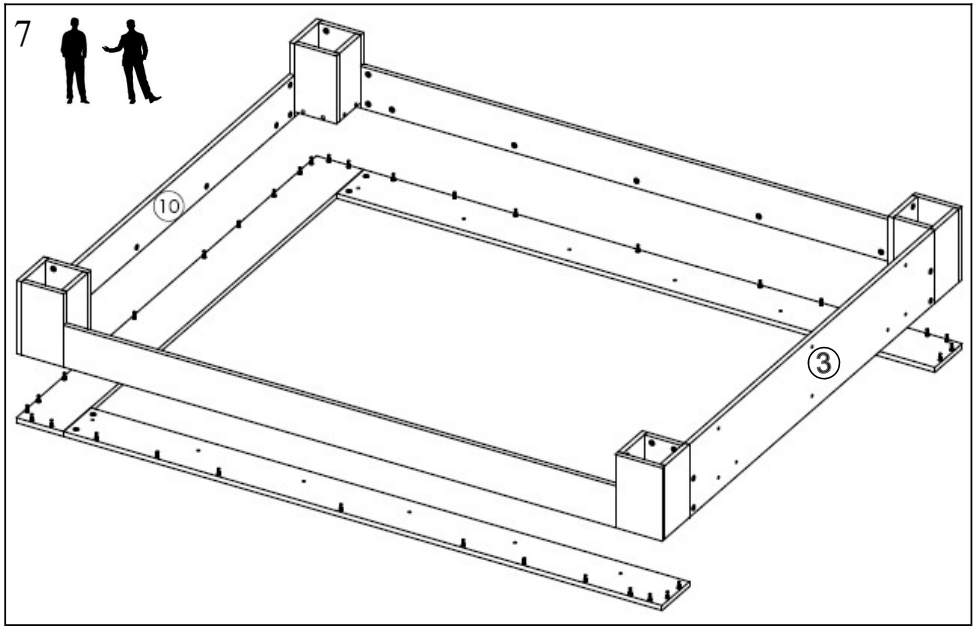

8

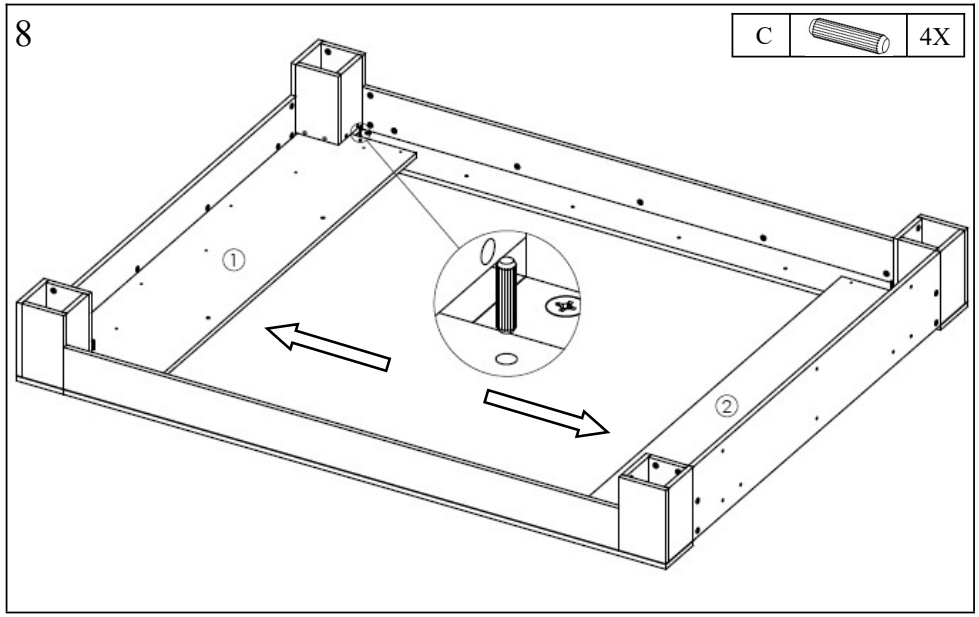
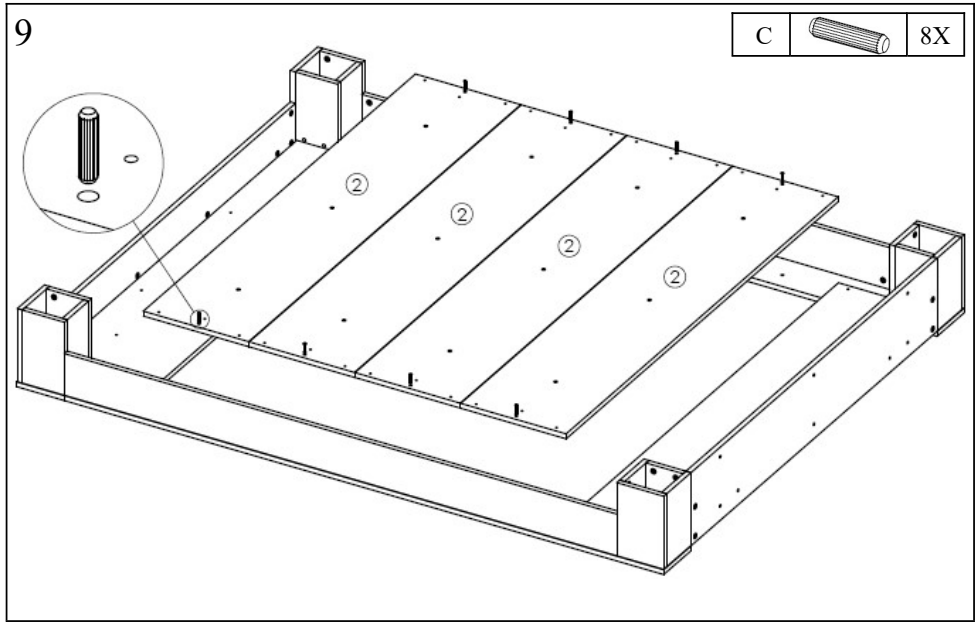
9