ASSEMBLY / DISASSEMBLY INSTRUCTIONS

⚠WARNING *Assembly and disassembly of this table requires the effort of two or more adults able to lift at least 120-lbs.*

1

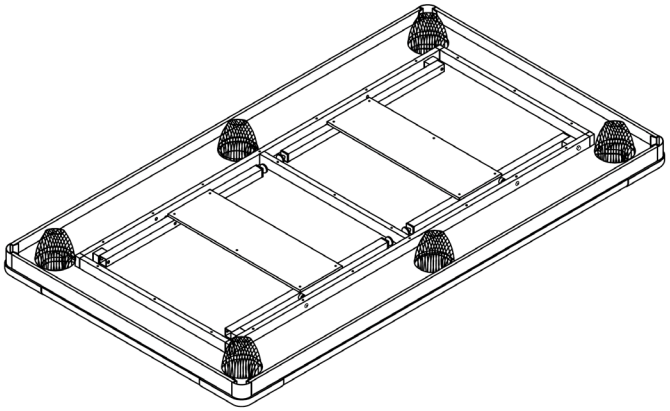

1. After removing the table from the carton, place the table felt side down.

2

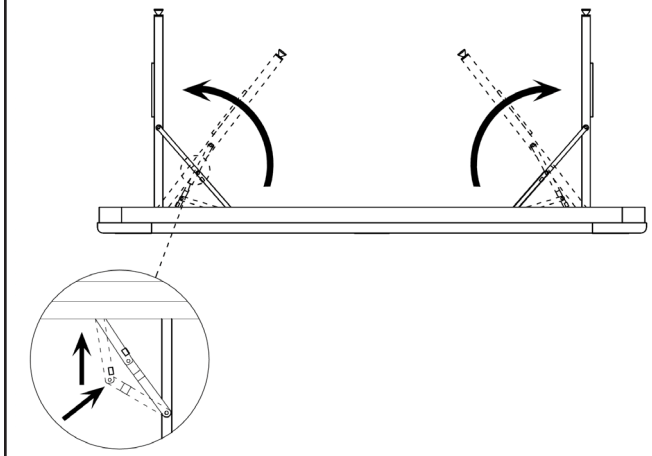

2. Carefully extend each leg and lock into place using the hinges.

3

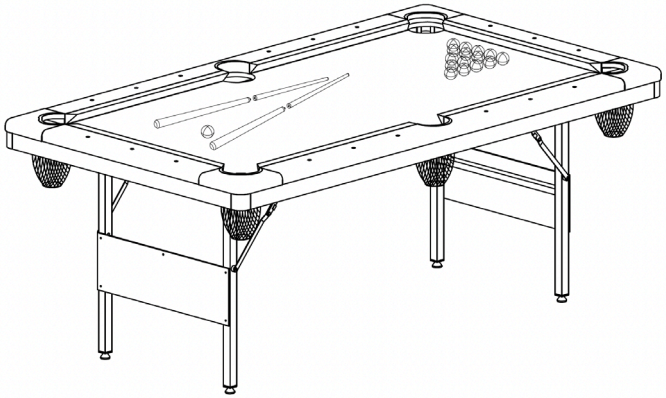

3. Lift the table fully off the ground* before rotating it, setting it evenly on all four legs.

**The table must be fully off the ground before rotating. Supporting the weight of the table on its legs can cause damage to the table or injury.*

For disassembly, follow the above steps in reverse order.

NEED SPARE PARTS OR A REPLACEMENT?

If your item has structural damage or if you need spare parts, contact us directly and our U.S. based Customer Service team will be happy to assist you.

Call (800) 759-0977, Monday - Friday, 8am-5pm (CST)
Speak to a real person on our Customer Service team located in **Batavia, IL USA** - no robots or call centers.

Contact us at: custserv@bluewaveproducts.com
Email us and our team will get back to you within 1-2 days to resolve any issues.

⚠ WARNING

Please read the assembly instructions before assembling and using your product. We recommend that two adults work together to assemble this game. Failure to follow the provided instructions can result in property damage or serious bodily harm. The warranty does not cover defects or damage due to improper installation, alteration, accident or any other event beyond the control of the manufacturer. Defects or damage resulting from misuse, abuse or negligence will void this warranty. The warranty does not cover scratching or damage that may result from normal usage. This product is intended for indoor use only. Do not sit, climb, or lean on the game table as this can cause the legs of the table to fold unexpectedly. Do not drag the table when moving it, this will damage the legs.



Reduce risk of injury by assembling away from persons or objects



Be aware of pinch points



Intended for indoor use only



Do not sit on the table



Do not sit under the table

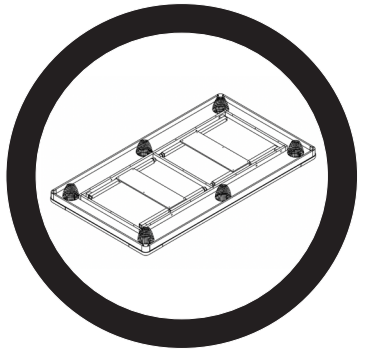

Fold legs and store away when not in use