NOTES:

1. TO INSPECT ASSEMBLY, FOLLOW FIRST ARTICLE AND IN PROCESS INSPECTION SHEET.
2. PUT THESE ITEMS IN SEPARATE PLASTIC BAGS.
3. TORQUE TO 8 +/-0.5 LB-FT.
4. APPLY THIN COAT OF SILICON GREASE FOR ALL O-RINGS BEFORE INSTALLATION.
5. APPLY LOCTITE 242, IF SCREW DOES NOT HAVE NYLON PATCH.
6. APPLY LOCTITE 680.
7. PULL OUT HOSE AND APPLY SILICON GREASE, BETWEEN HOUSE AND SPOUT, 10" FROM OUTLET TO HOSE.
8. TORQUE SWIVEL NUT TO 10 +/-2 LB-IN.
9. TORQUE TO 10 +/-2 LB-FT.
10. TORQUE TO 7 +/-2 LB-IN.
11. PARTIALLY THREAD MOUNTING KIT ONTO SHANK.
12. DO NOT DOCK SPRAY HEAD TO SPOUT WHEN PACKAGING.

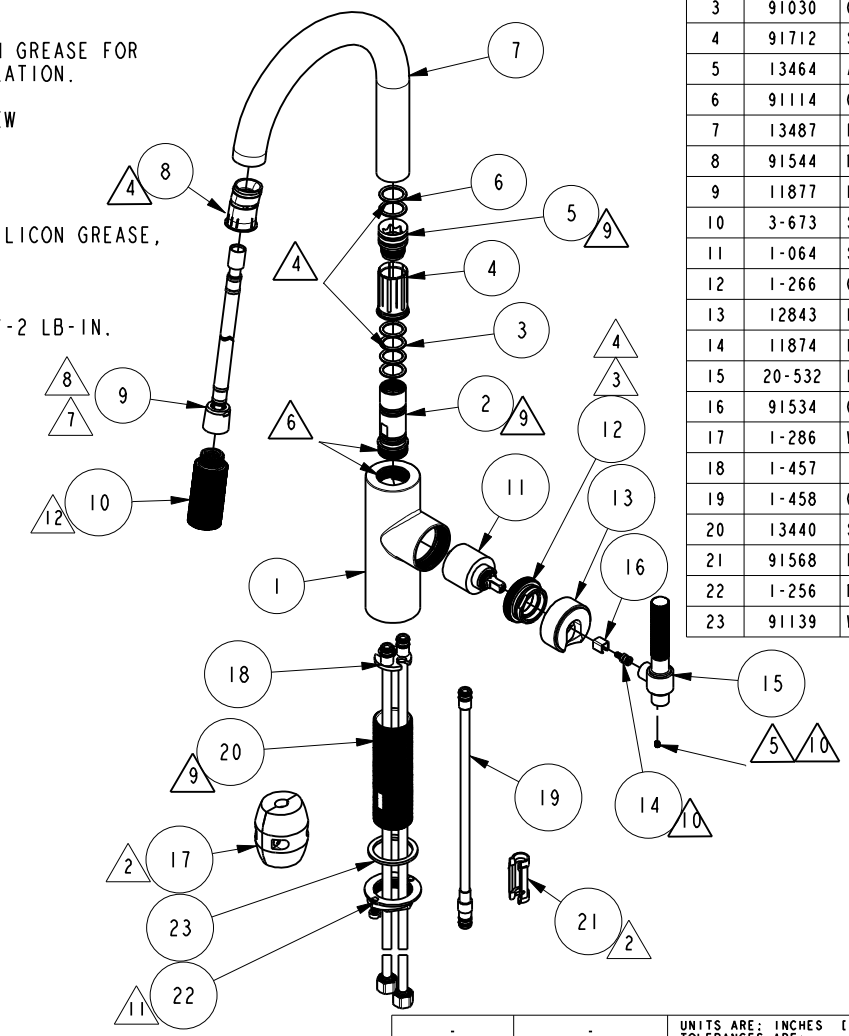

BILL OF MATERIAL (CURRENT LEVEL)

ITEM	PT/ASSY	DESCRIPTION	TYPE	QTY.
1	13486	BODY, TAFT PULL-DOWN	PART	1
2	12667	SPOUT ADAPTER	PART	1
3	91030	O-RING, #2- 115, EPDM, 65-75 DURO, NSF 61	PART	4
4	91712	SLEEVE	PART	1
5	13464	ADAPTER EXTENSION	PART	1
6	91114	O-RING, #2- 116, EPDM, 65-75 DURO, NSF 61	PART	2
7	13487	PULLDOWN SPOUT - SHORT	PART	1
8	91544	MAGNET DOCKING	ASSEMBLY	1
9	11877	HOSE, PULLDOWN SWIVEL	ASSEMBLY	1
10	3-673	SPRAY HEAD	ASSEMBLY	1
11	1-064	SINGLE LEVER CARTRIDGE	PART	1
12	1-266	CART. RETAINER ASM	ASSEMBLY	1
13	12843	HANDLE HUB	PART	1
14	11874	HANDLE ADAPTER SCREW	PART	1
15	20-532	KNURLED HANDLE ASM	ASSEMBLY	1
16	91534	CARTRIDGE STEM INSERT	PART	1
17	1-286	WEIGHT ASM	ASSEMBLY	1
18	1-457	INTEGRATED SUPPLY HOSE	ASSEMBLY	1
19	1-458	OUTLET HOSE	ASSEMBLY	1
20	13440	SHANK	PART	1
21	91568	RETAINER CLIP	PART	1
22	1-256	MOUNTING KIT	ASSEMBLY	1
23	91139	WASHER RBR 1-3/8	PART	1

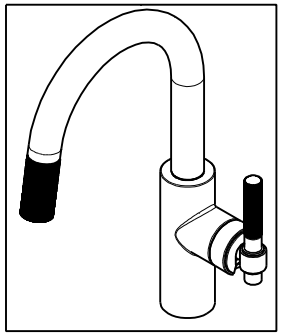

Cesar Gayosso Digitally signed by Cesar Gayosso Date: 2022.01.27 09:44:32 -08'00'

ZONE	REV	DESCRIPTION	DATE	APPROVED
-	D	EN-4446	01/27/22	C.G.
-	C	EN-4213D	08/10/21	C.G.
-	B	EN-4300s	03/29/21	R.S.
-	A	EN-4167	06/10/20	JMR
-	-	EN-4116	02/27/20	J.M.

COPYRIGHT 2005 BRASSTECH, INC. THESE DRAWINGS AND THE DESIGNS DEPICTED HEREIN ARE THE PROPRIETARY PROPERTY OF BRASSTECH. ANY USE OR REPRODUCTION IS SUBJECT TO THE EXPRESS APPROVAL OF BRASSTECH. UNAUTHORIZED USE IS STRICTLY PROHIBITED. ALL RIGHTS RESERVED.

TESTING	-	-	-
ASSEMBLY	-	-	-
PLATING	-	-	-
POLISHING	-	NEXT ASSY	USED ON
MACHINING	-	APPLICATION	
TOOLING FIXTURE #		REMOVE ALL BURRS AND SHARP EDGES	

UNITS ARE: INCHES [MM]
TOLERANCES ARE:
FRACTIONS ±1/16" DECIMALS .X ±.1 [2,5] .XX ±.06 [1,5] ANGLES ±1°
(X.XXX) DENOTES CRITICAL DIMS.
ALL THREADS ARE CRITICAL

DRAWN	JINSON	01/27/22
CHECKED	C.G.	01/27/22
APPROVED	C.G.	01/27/22

BRASSTECH INCORPORATED
2001 CARNEGIE AVE.
SANTA ANA, CA 92705
(949) 417-5207

PREP/BAR PULL DOWN

DWG NO. 3290-5223 REV D

SCALE .150 REF. - SHEET 1 OF 2

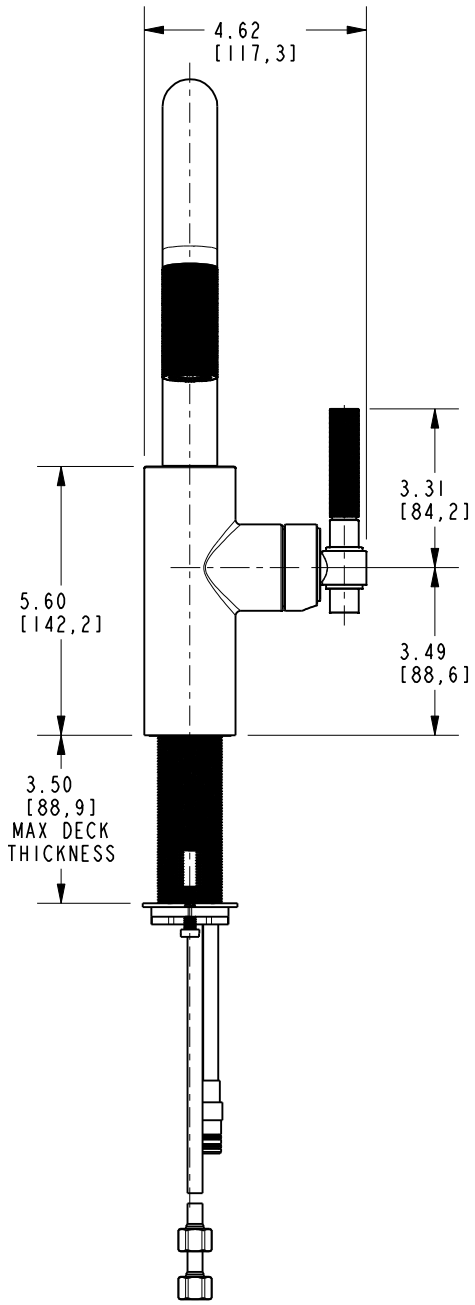

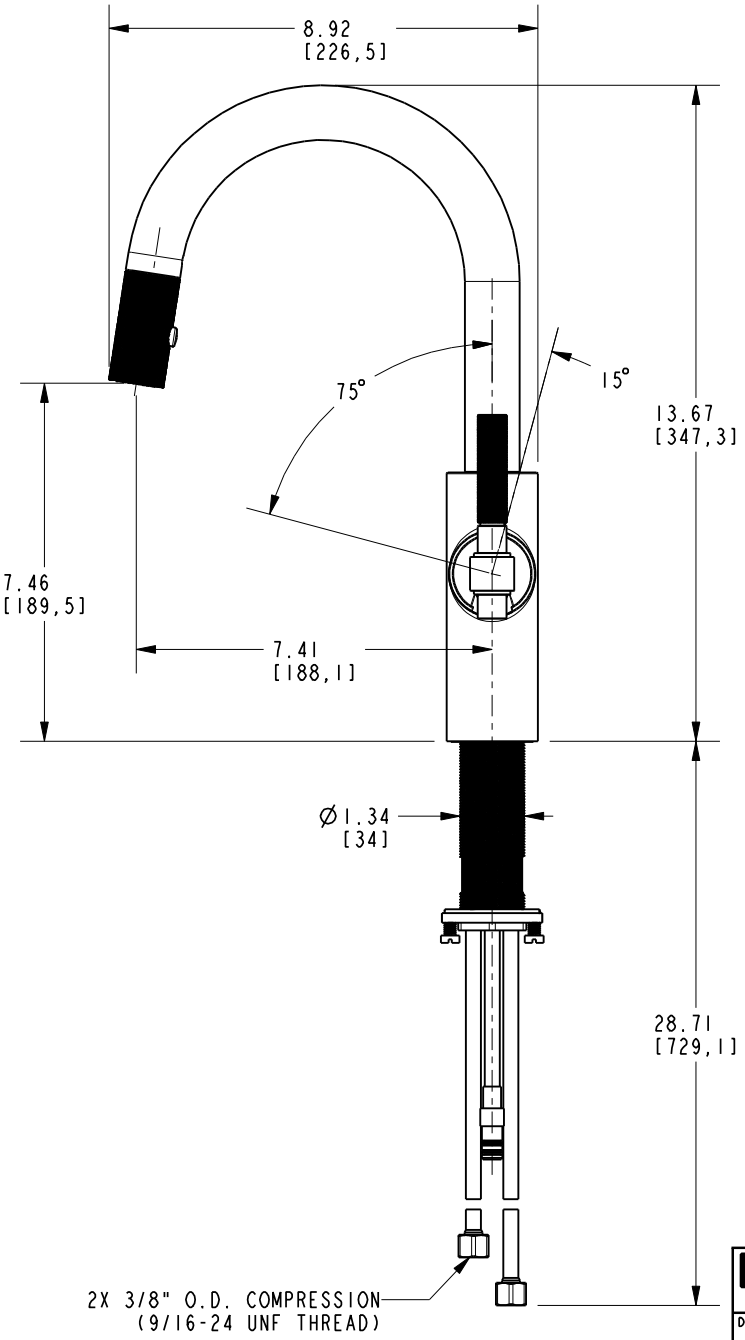

BRASSTECH INCORPORATED

2001 E. CARNEGIE AVE.
SANTA ANA, CA 92705
(949) 417-5207

DWG NO.	REV
3290-5223	D

SCALE	REF.	SHEET
.250	-	2 OF 2