WARNING!

Children have died from furniture tipover. Fixed wall device have been included with this product;you must install the fixed wall device according to these instructions in order to minimize the risk of furniture.If you have any questions about this product or the Fixed wall device , please contact us immediately.

Never allow children to climb or hang on furniture,including drawers or cabiner doors.

In addition to installing the restrains,to help prevent tip-over.

1. Never put a TV or other heavy objects on top of this product.
2. Do not stand on the product.

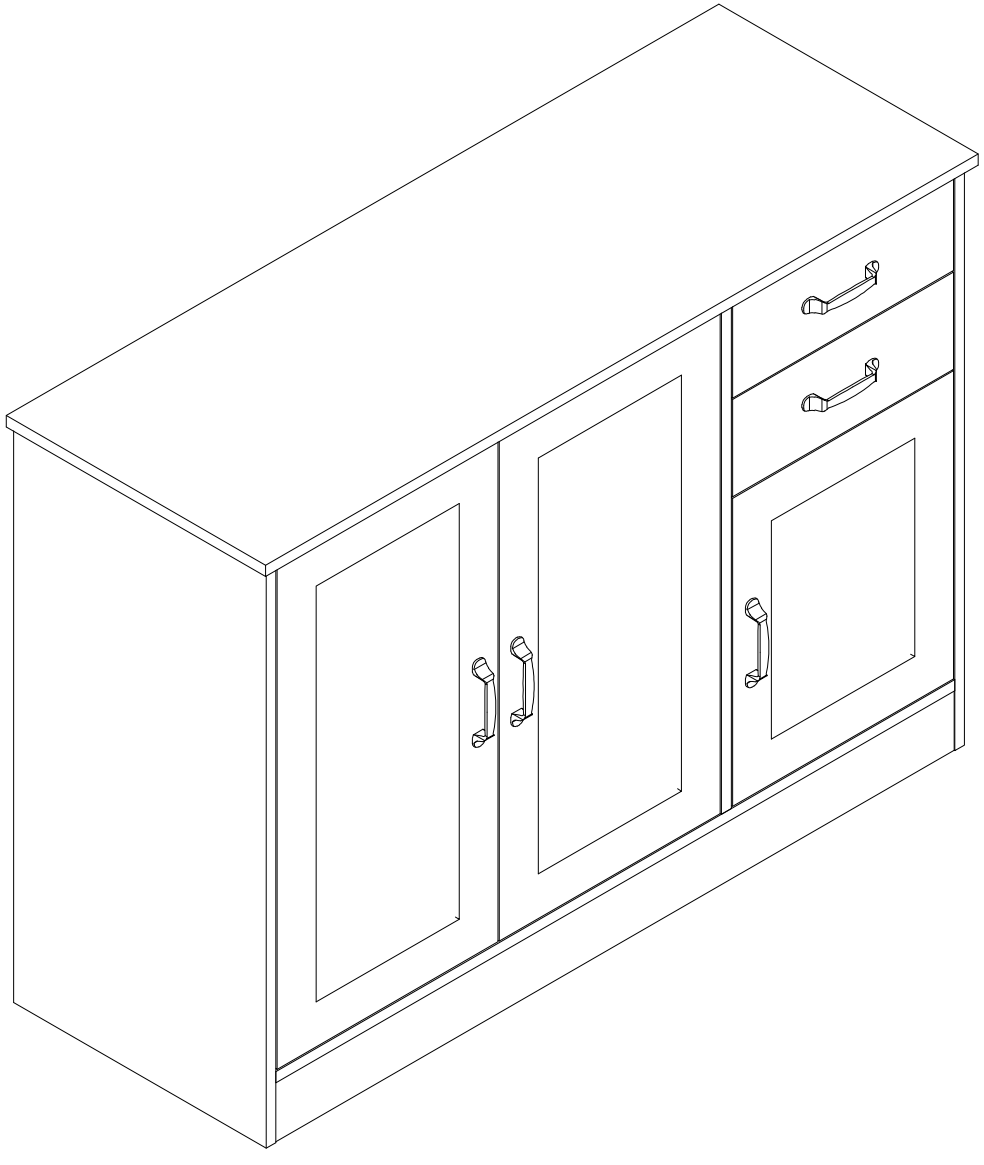

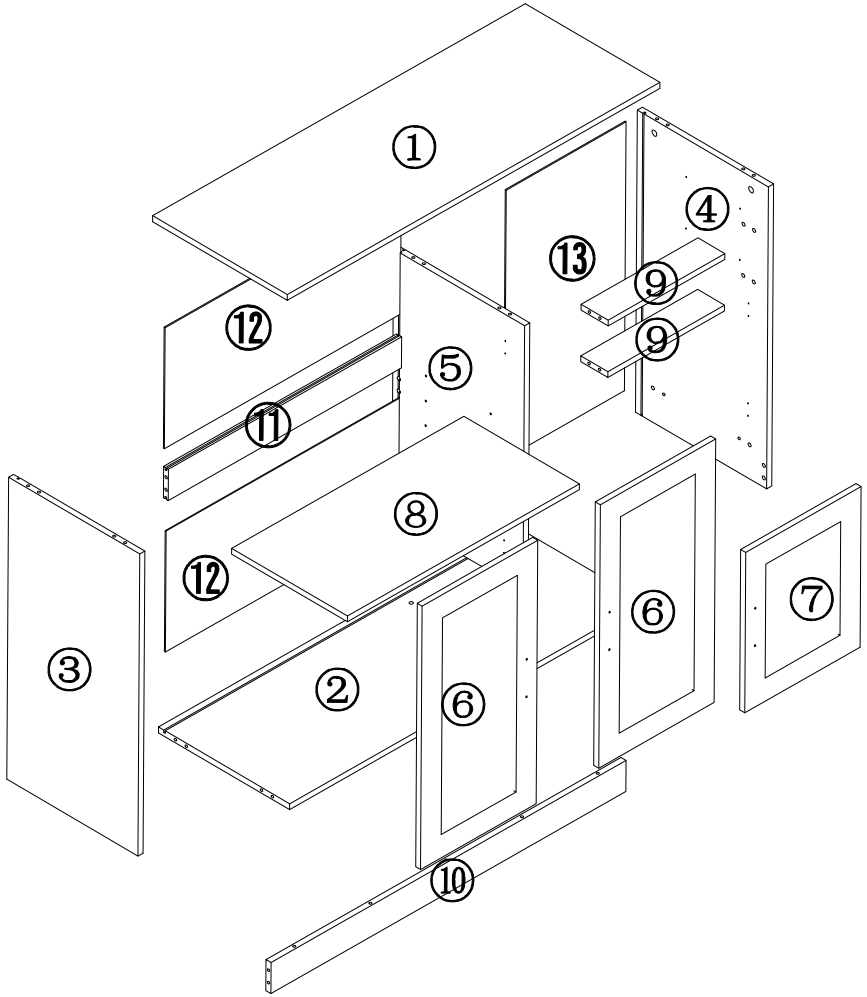

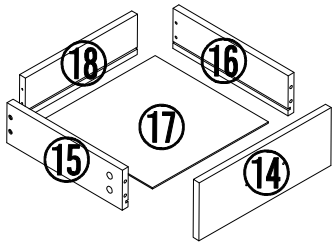

x2

K 4*20	L	M	N 3.5*35	O	P 3*12	Q			
10PCS	6PCS	4PCS	8PCS	16PCS	16PCS	1PCS			
A	B	C 8*40	D 300mm	E 300mm	F 300mm	G 300mm	H 3.5*14	I	J 96mm
39PCS	39PCS	14PCS	2PCS	2PCS	2PCS	2PCS	54PCS	1PCS	5PCS

1	2	3	4
1100*400	1048*390	775*390	775*390
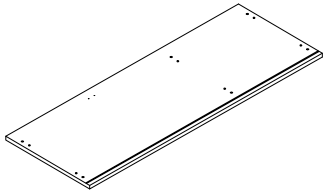	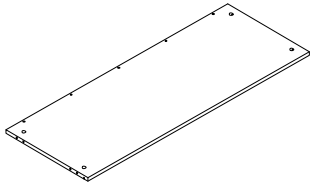	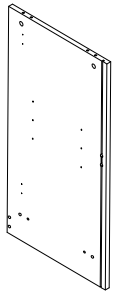	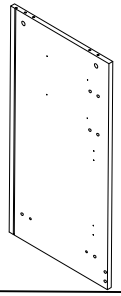
1PCS	1PCS	1PCS	1PCS
5	6	7	8
680*390	676*341	412*341	685*344
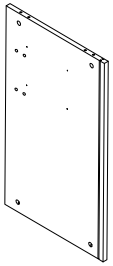	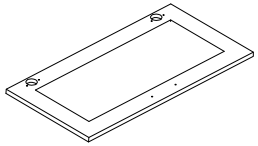	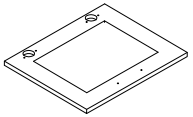	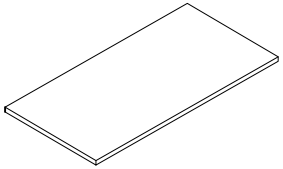
1PCS	2PCS	1PCS	1PCS
9	10	11	12
345*80	1048*80	688*80	697*310
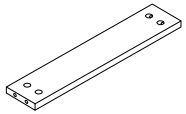	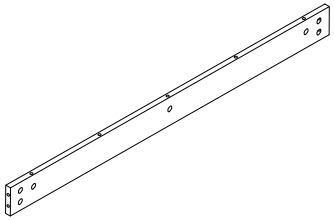	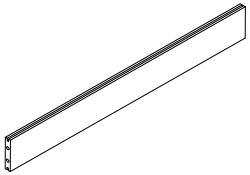	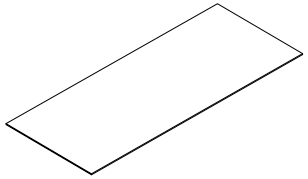
2PCS	1PCS	1PCS	2PCS
13	14	15	16
354*690	341*130	300*90	300*90
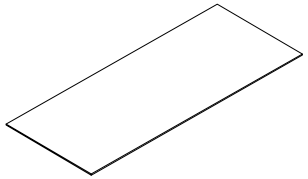	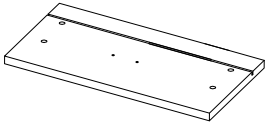	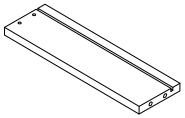	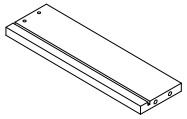
1PCS	2PCS	2PCS	2PCS
17	18		
299*294	289*90		
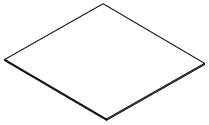	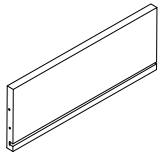		
2PCS	2PCS		

Hardware installation demonstration

NOTE:Please make sure "A"hardware tightened and can't be pulled out!

I

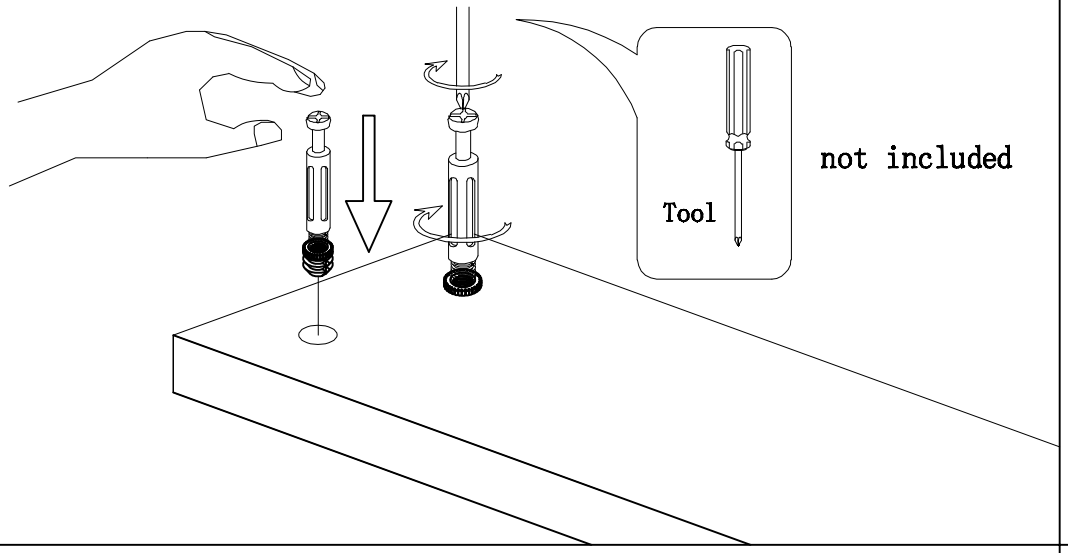

II

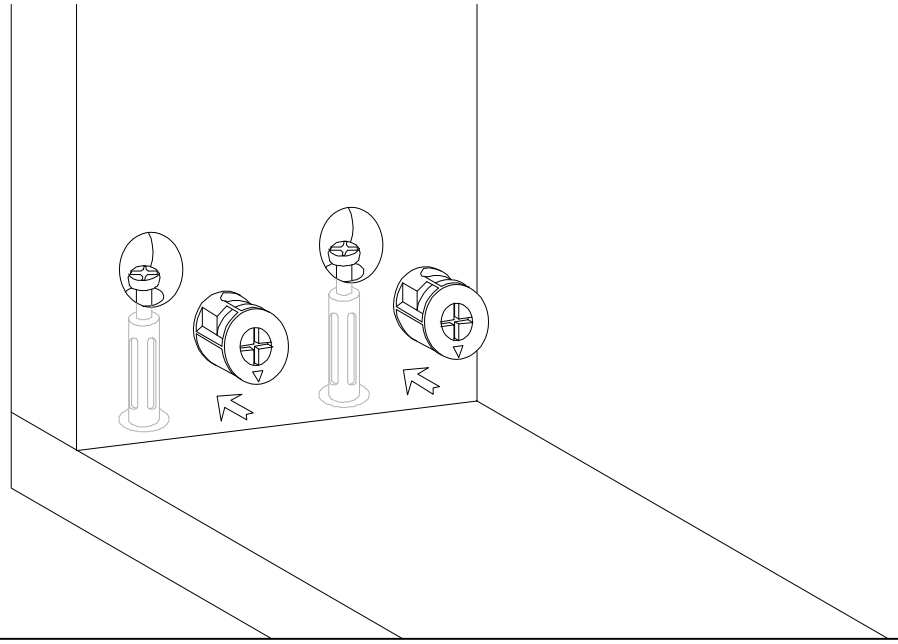

III

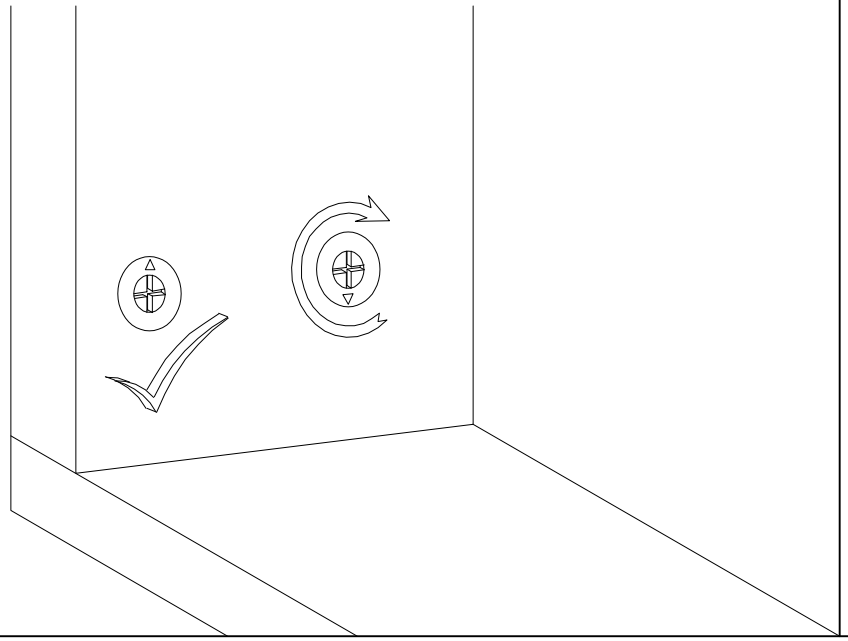

1

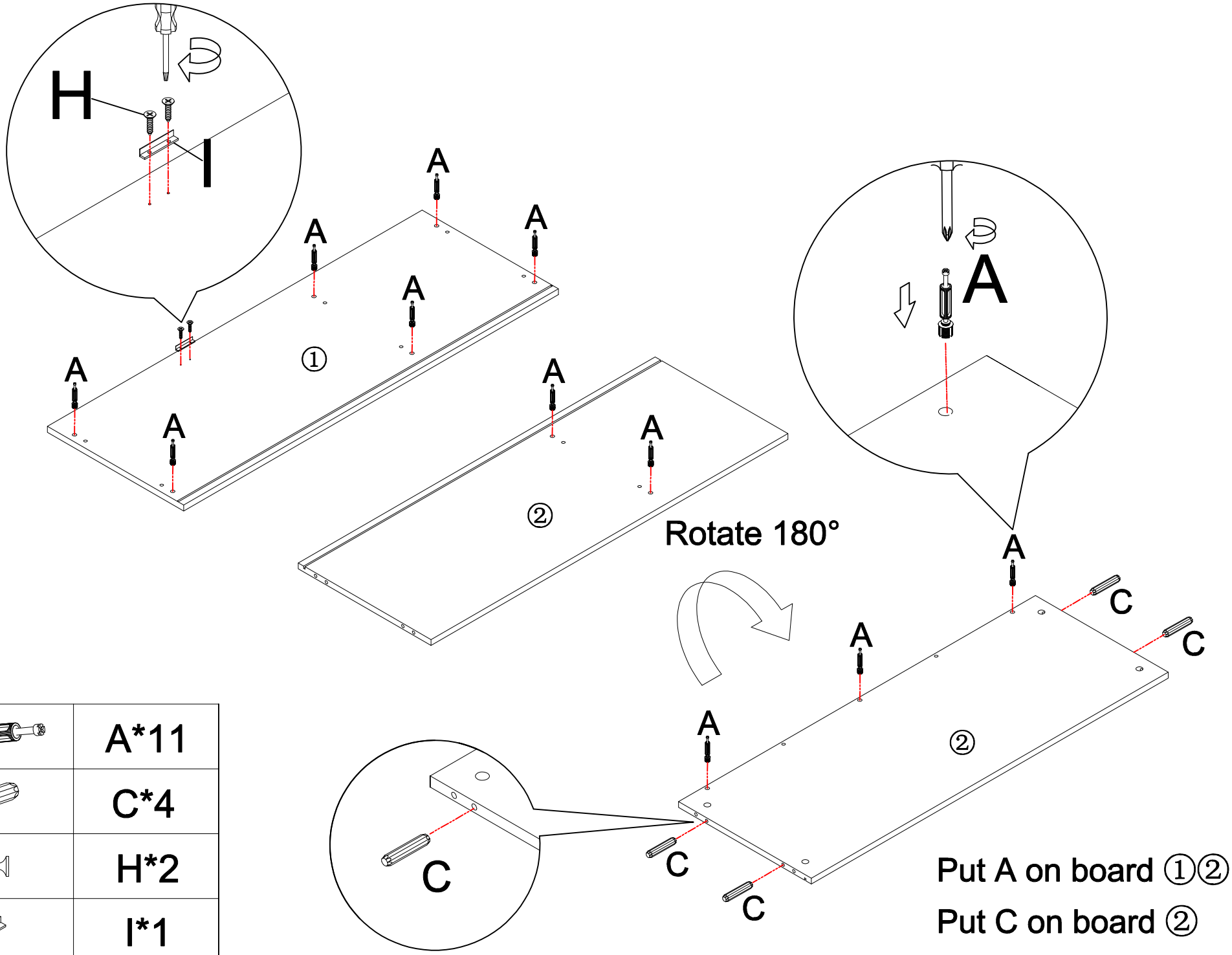

	A*11
	C*4
	H*2
	I*1

Put A on board ①②

Put C on board ②

2

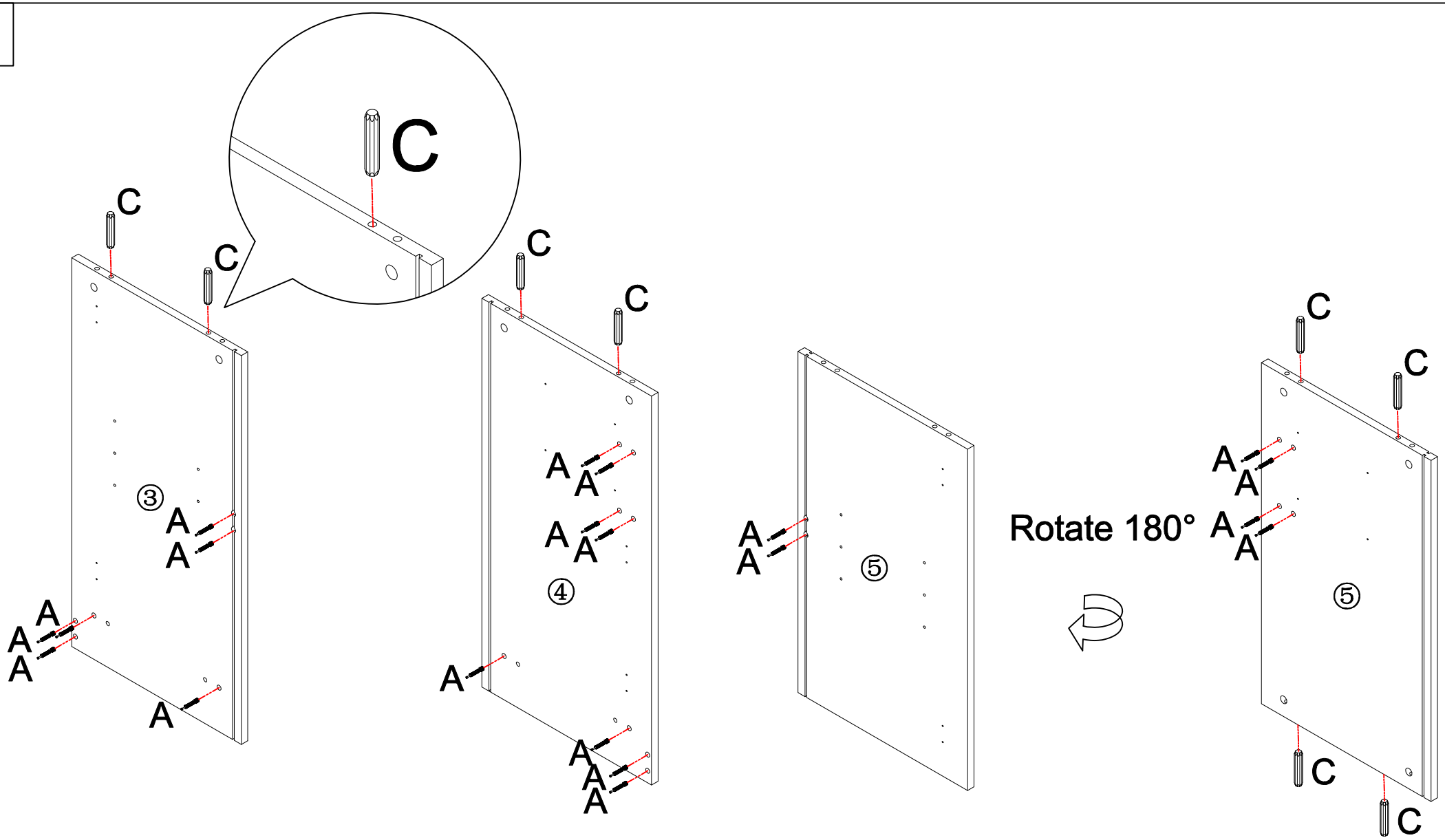

	A*20
	C*8

Put A on board ③④⑤

Put C on board ③④⑤

3

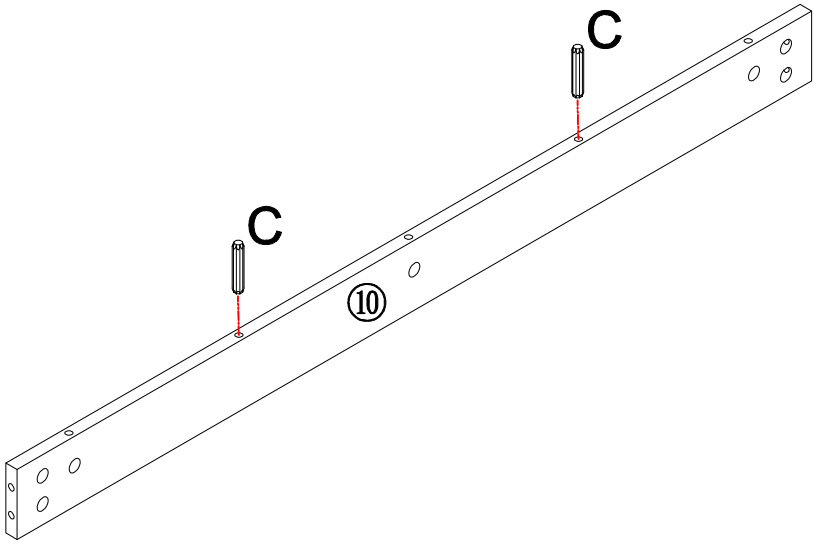

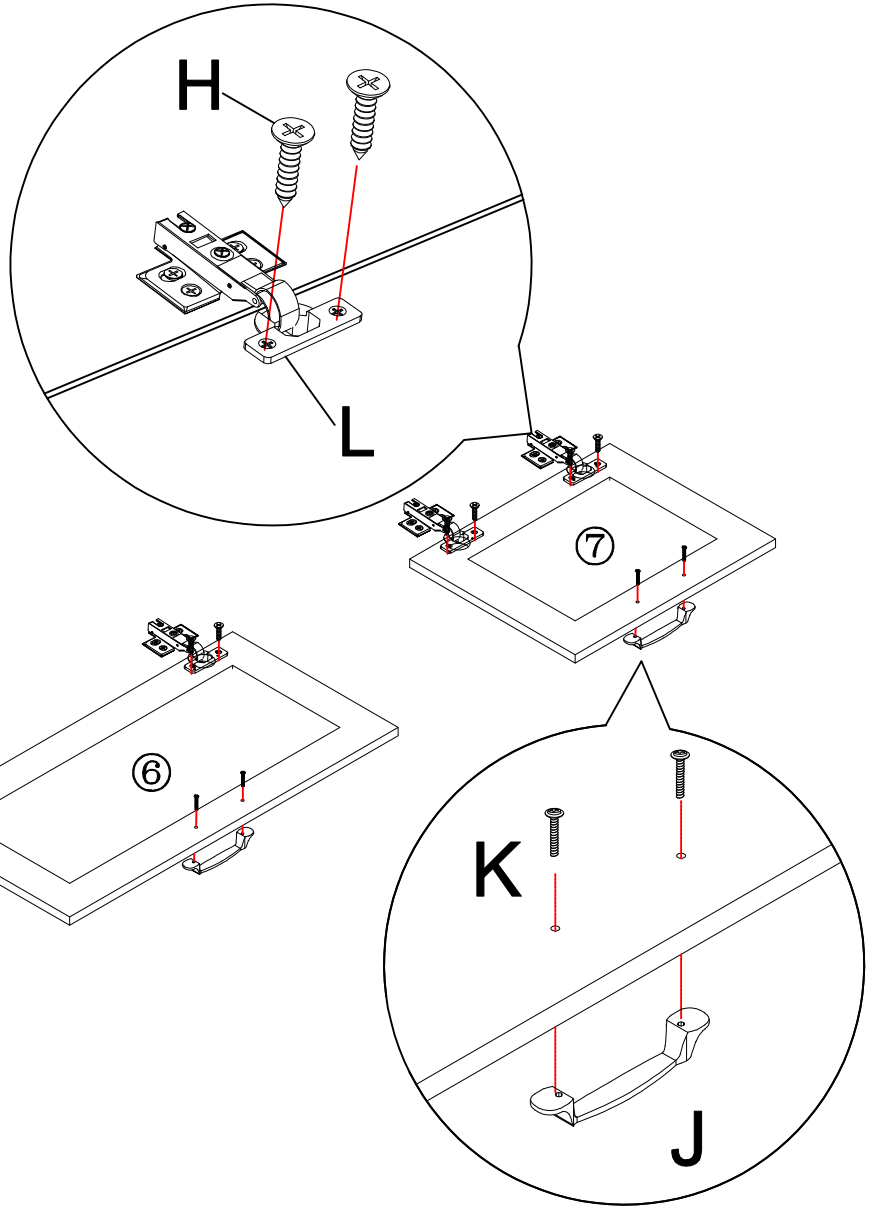

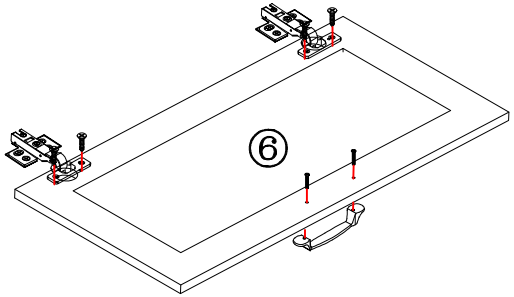

	C*2
	H*12
	J*3
	K*6
	L*6

Put C on board ⑩

4

Make sure the arrow on the screw align to the hole on the side

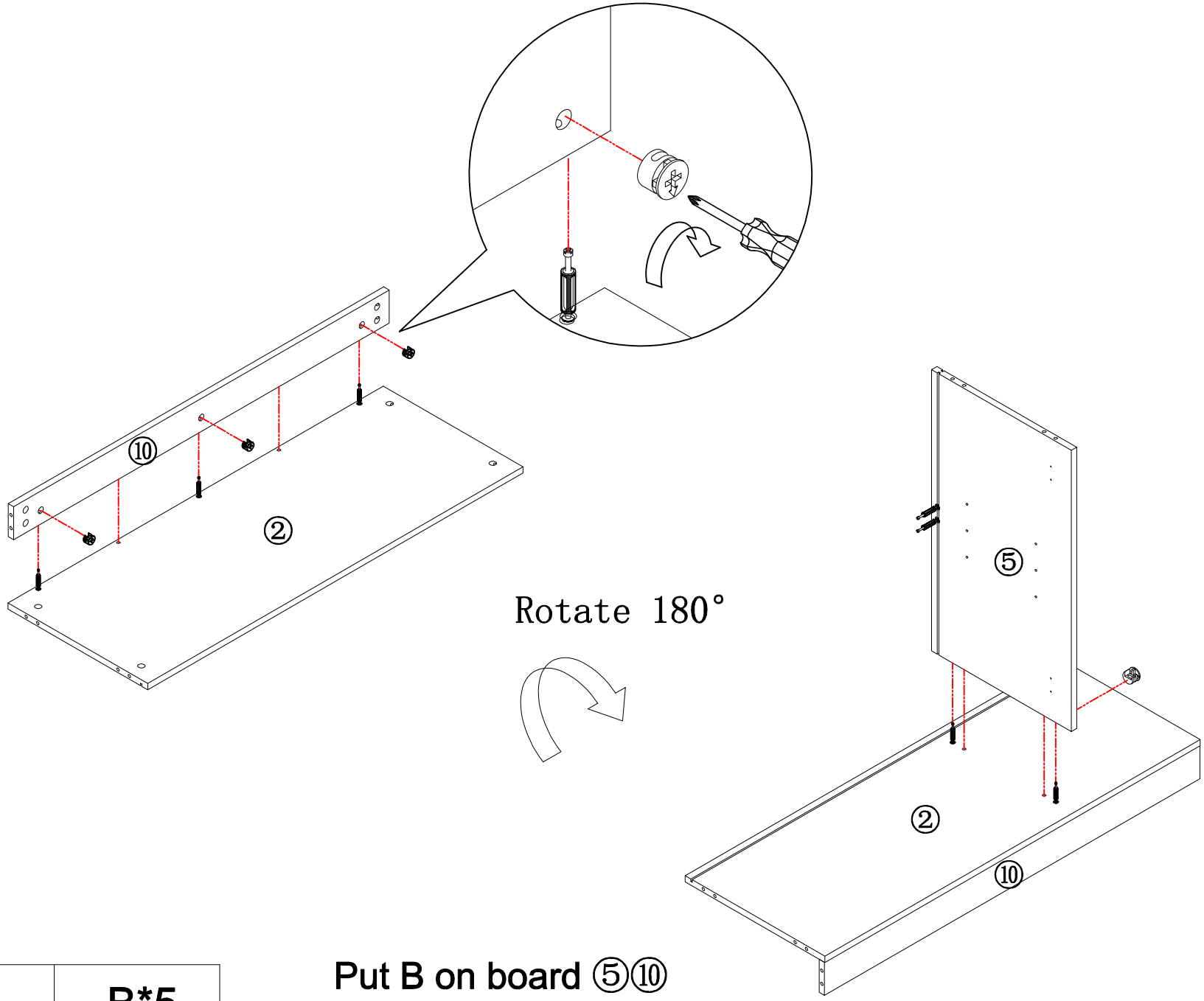

Put B on board ⑤⑩

	B*5

5

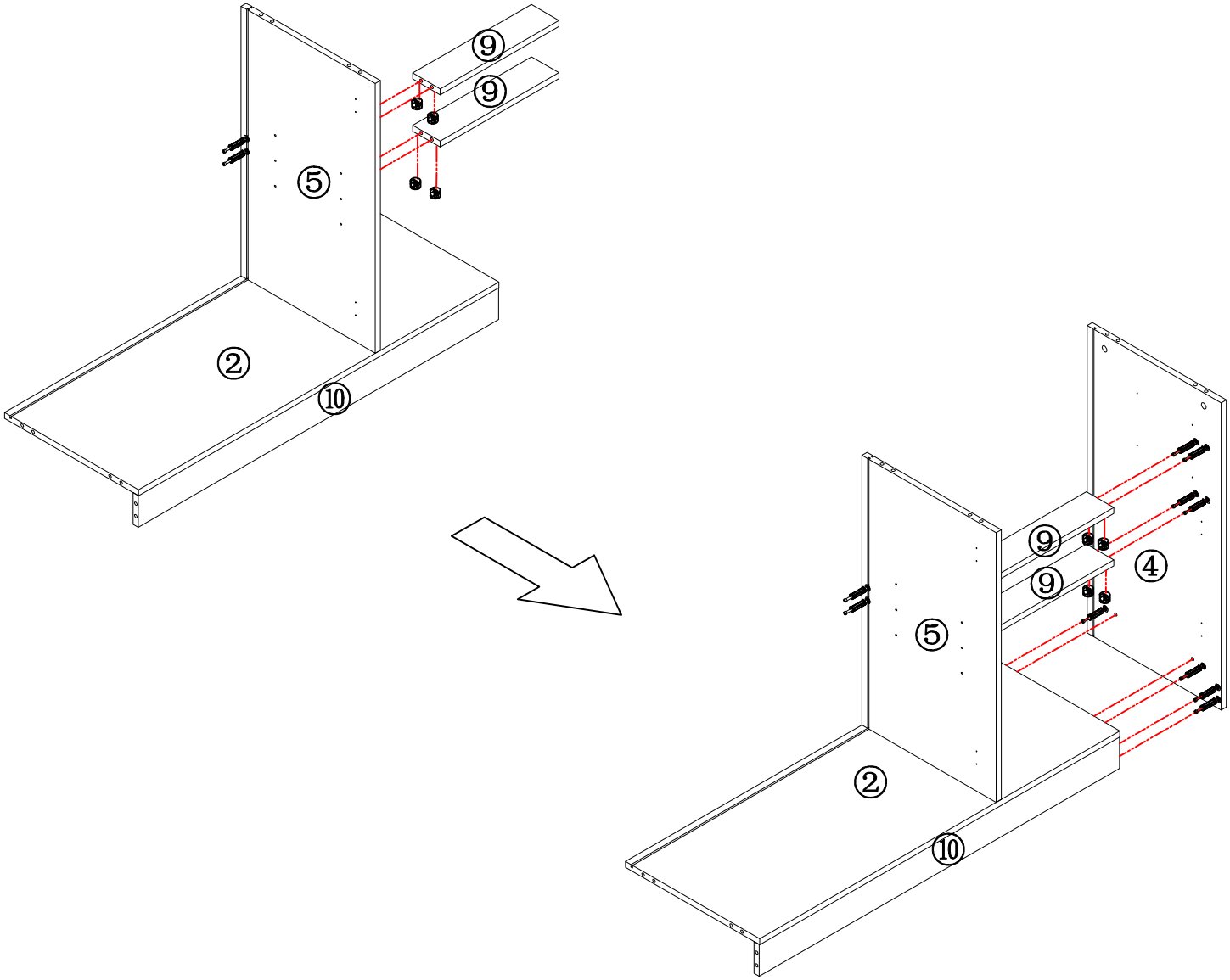

	B*12

Put B on board ②⑨⑩

6

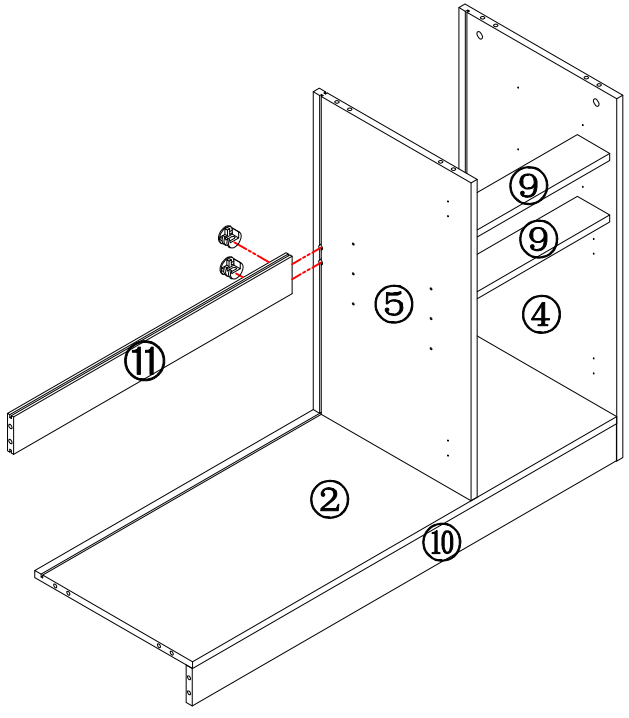

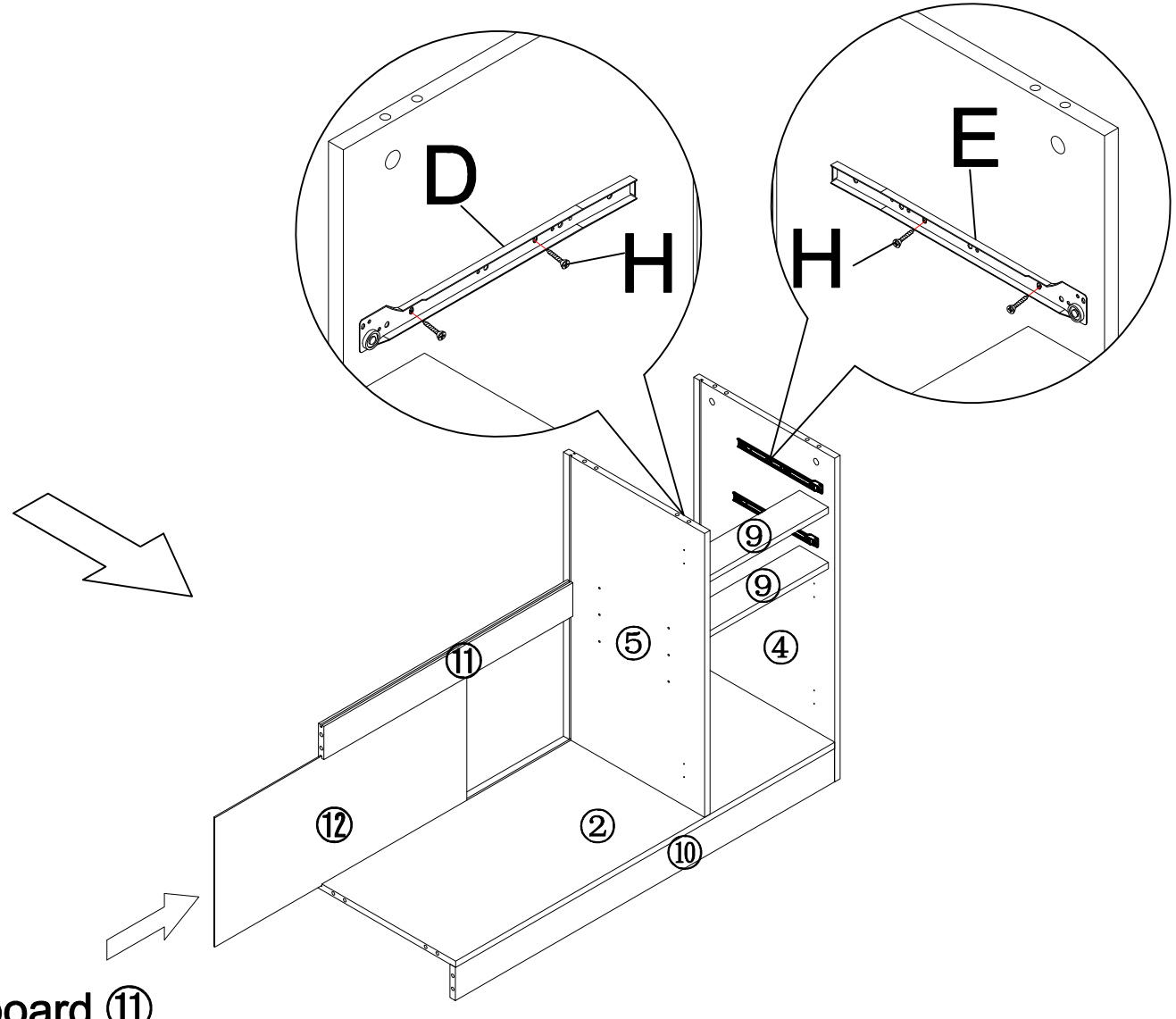

	B*2
	D*2
	E*2
	H*8

Put B on board ⑪

7

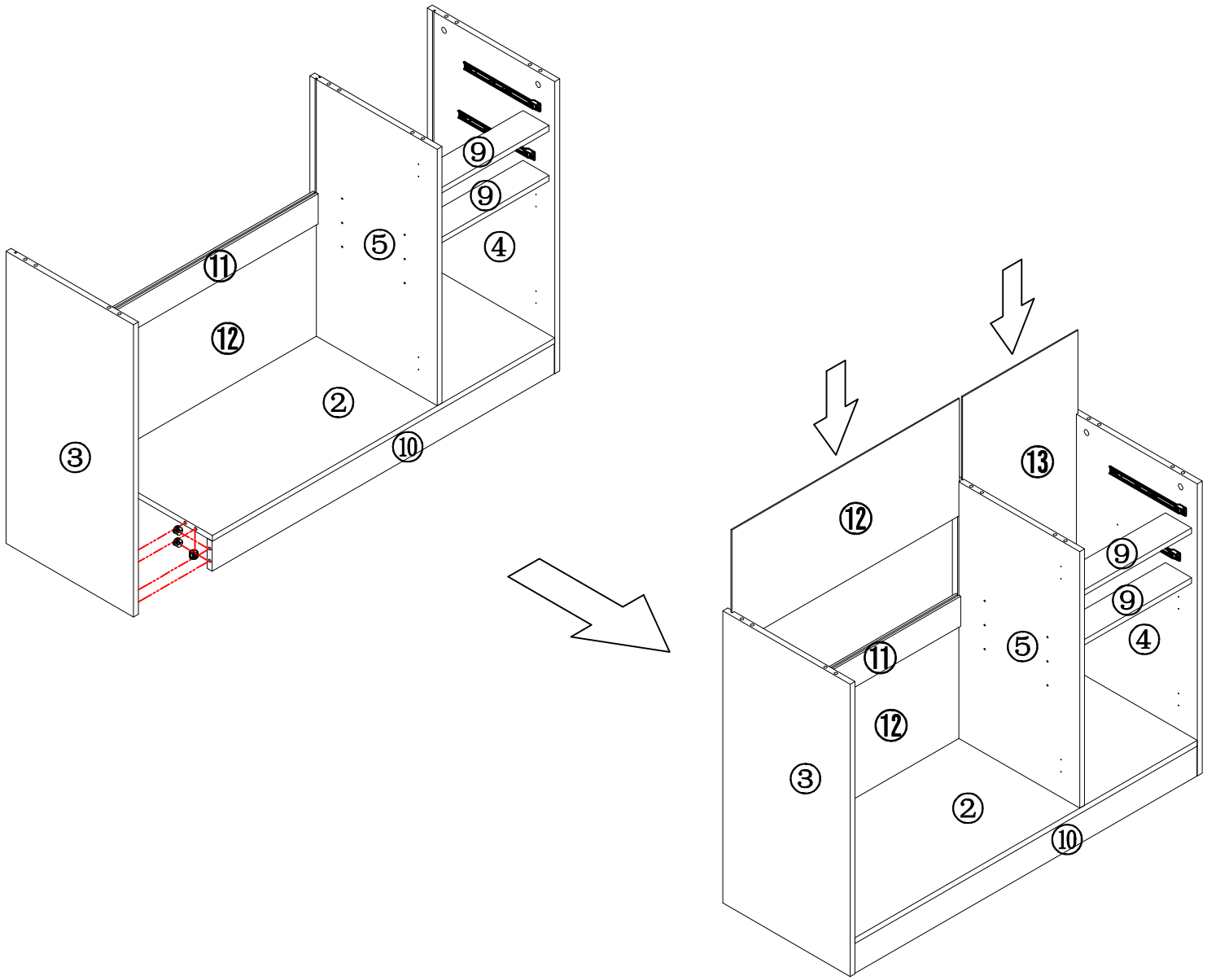

	B*6

Put B on board ②⑩⑪

8

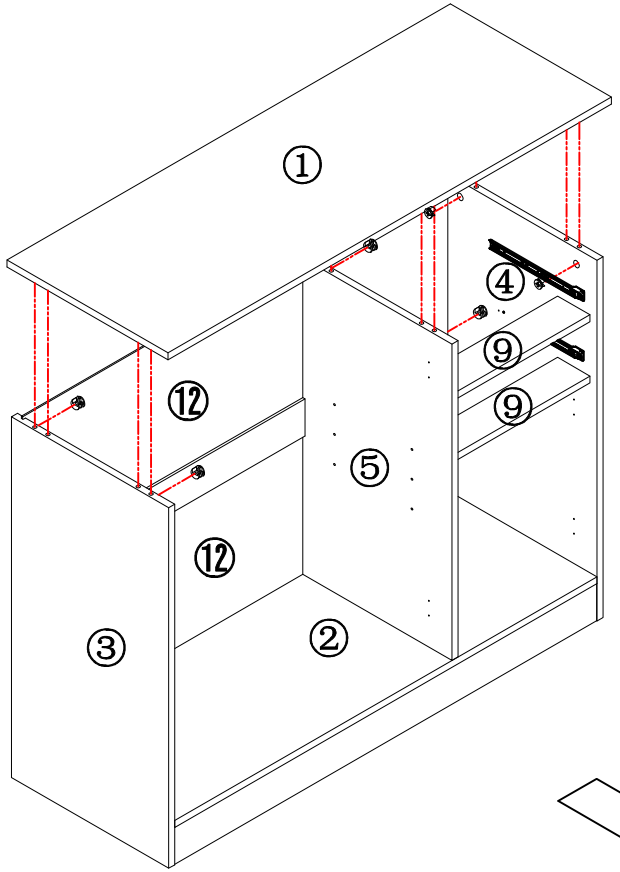

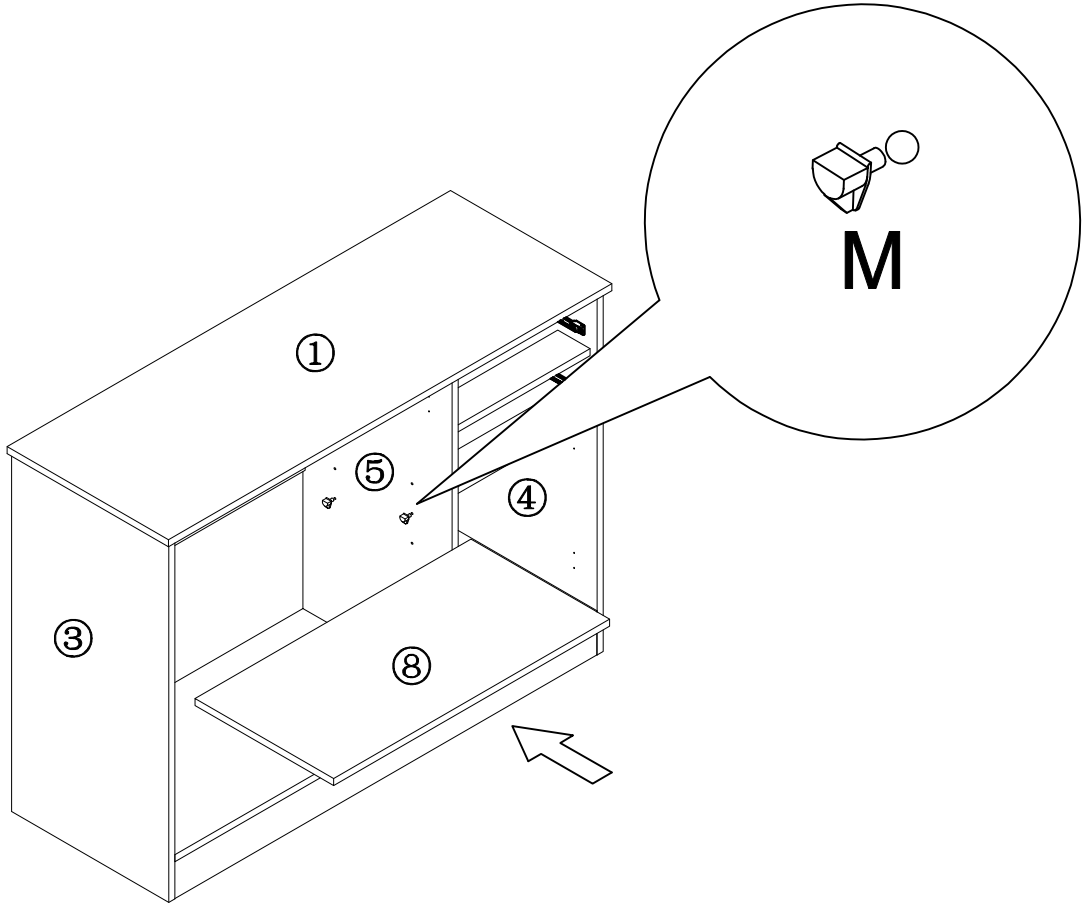

	B*6
	M*4

Put B on board ③④⑤

9

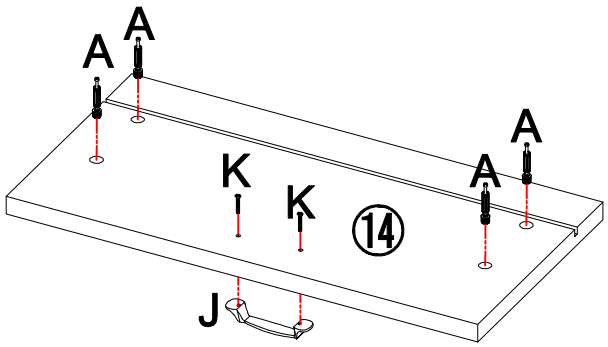

x2

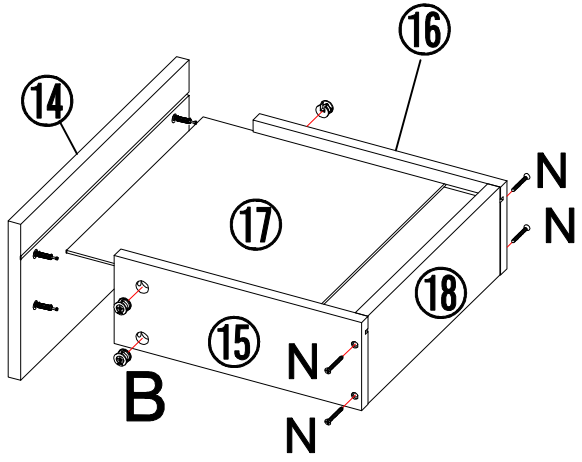

x2

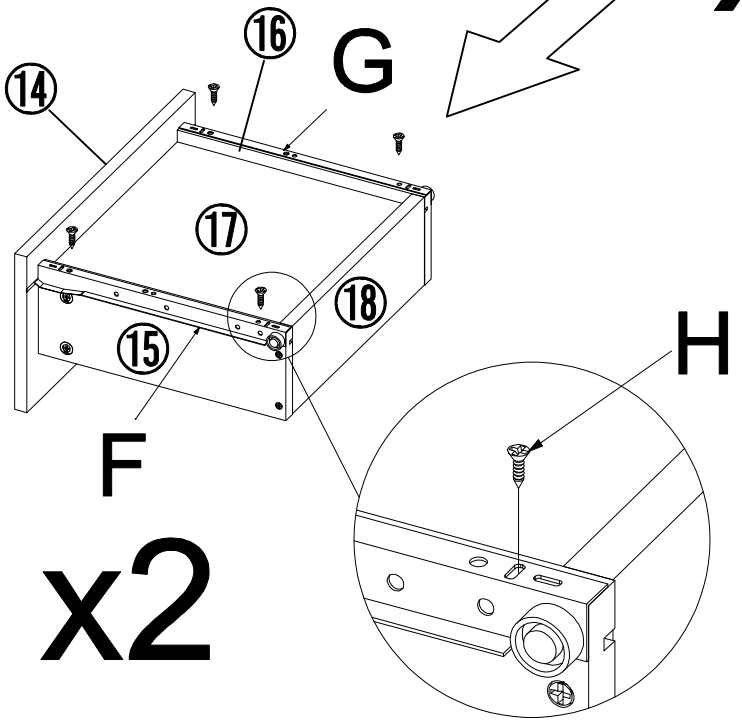

x2

	A*8
	B*8
	F*2
	G*2
	H*8
	J*2
	K*4
	N*8

10

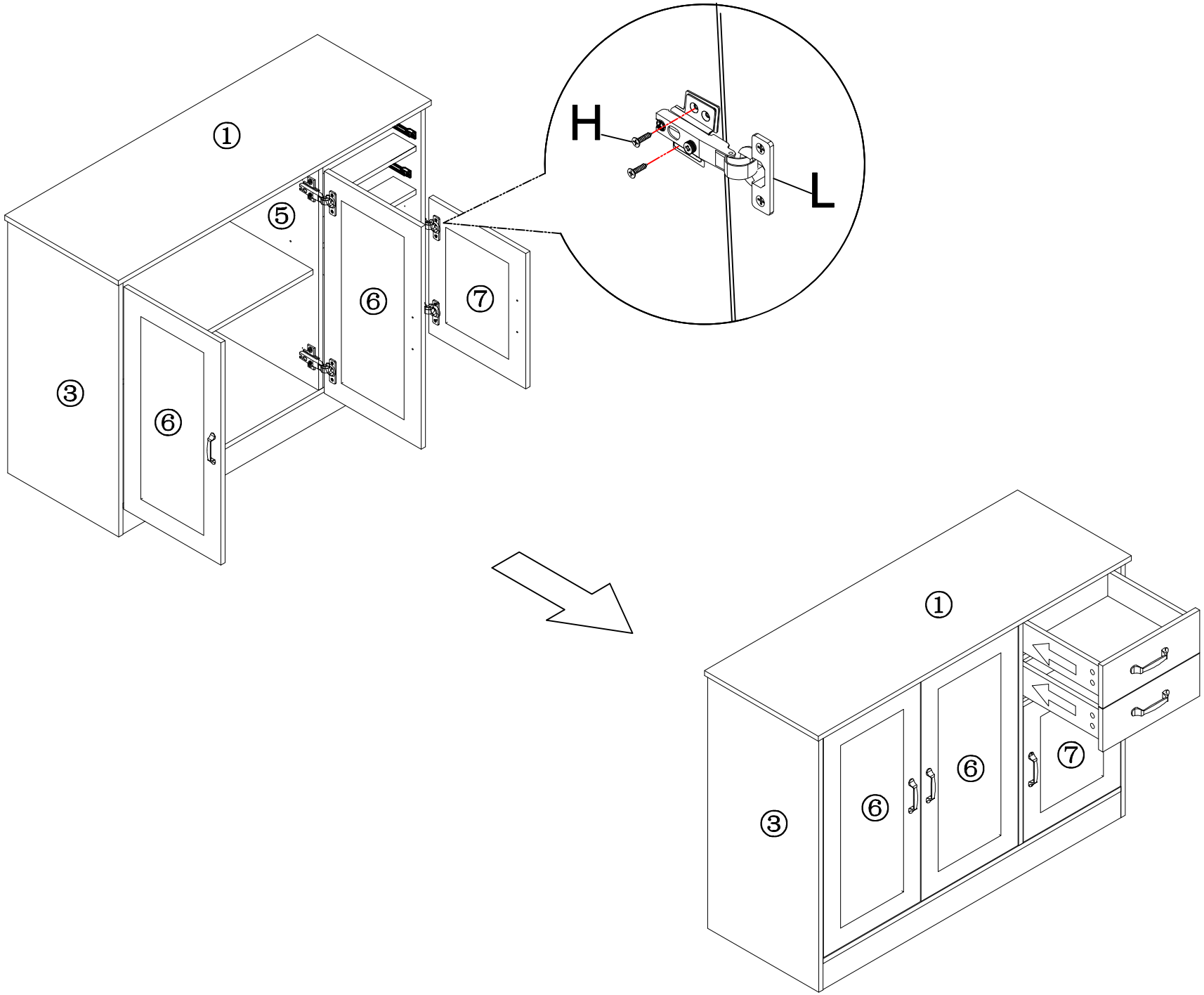

	H*24

11

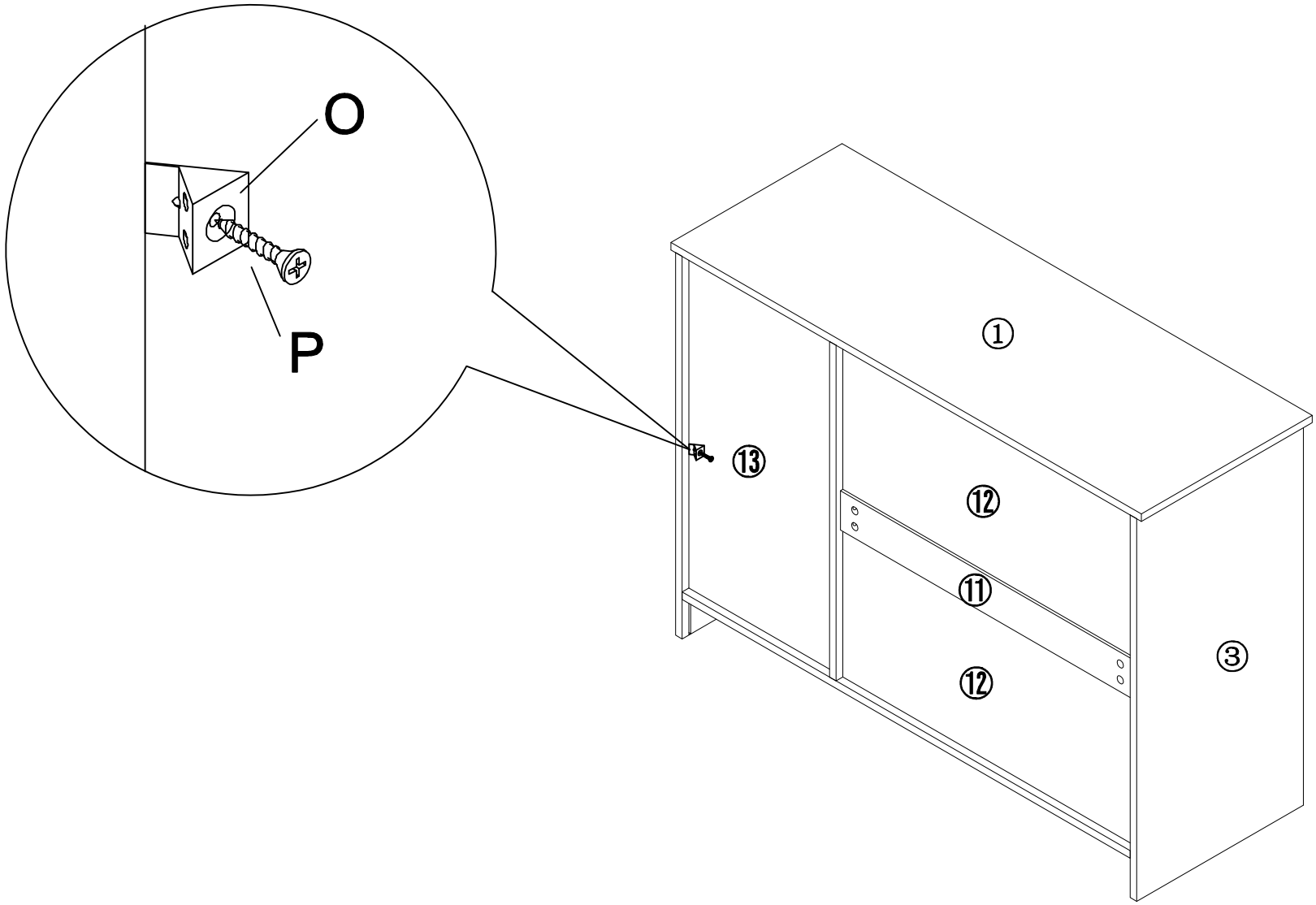

	O*16
	P*16

12

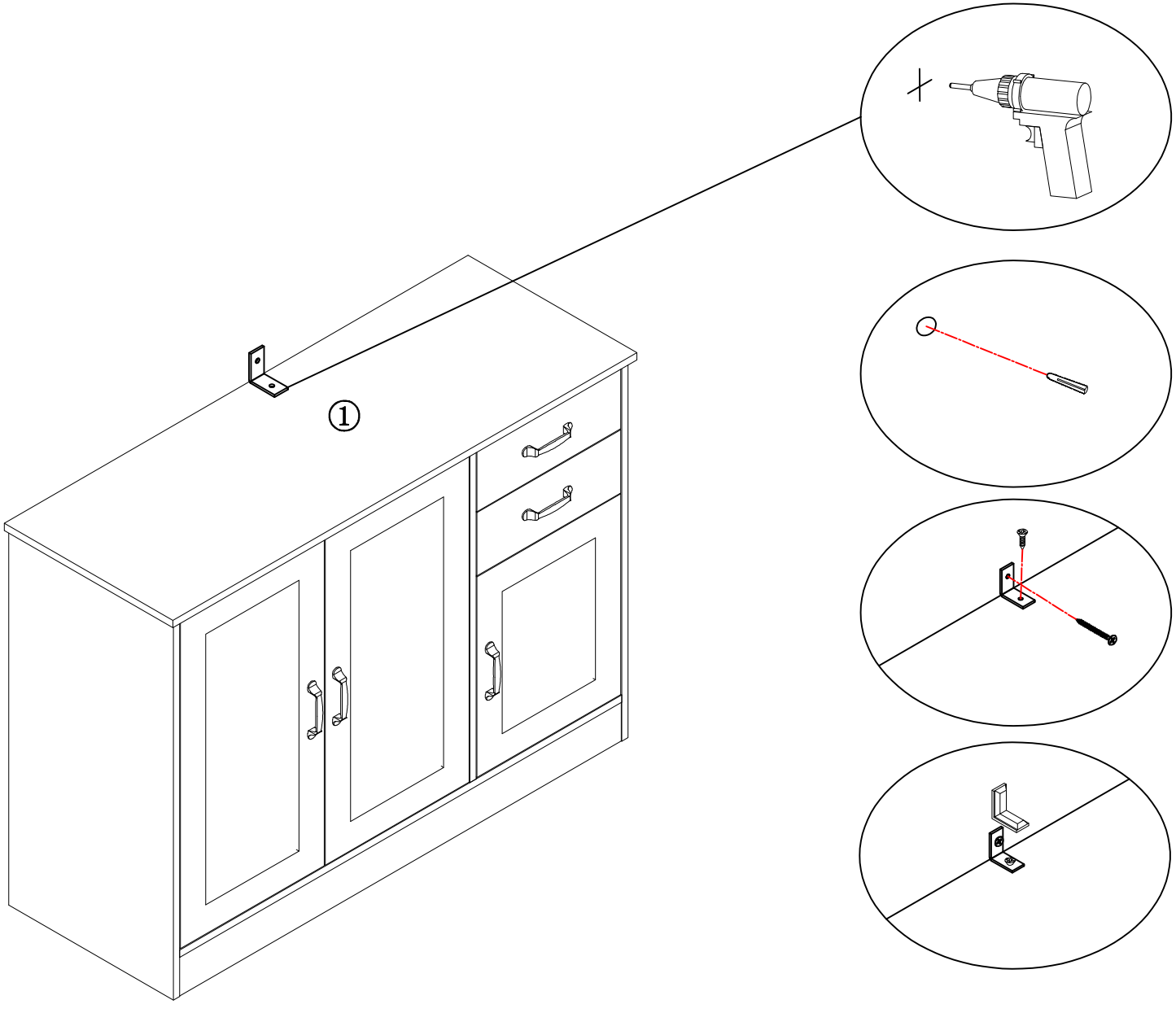

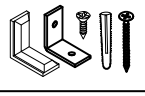

Q*1
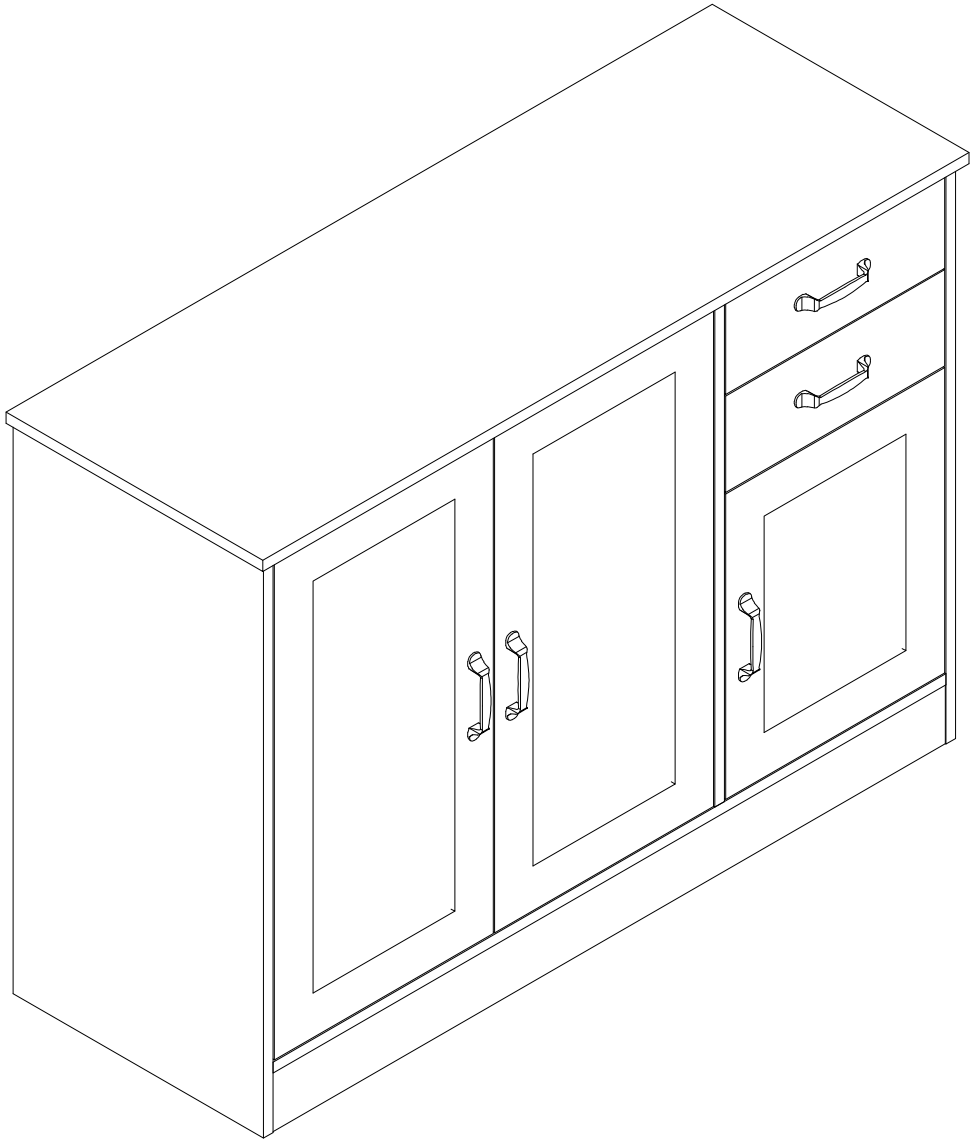
END