Instruction Book

For specification: 45cm(L)x38cm(W)x60cm(H)

2460 instruction manual

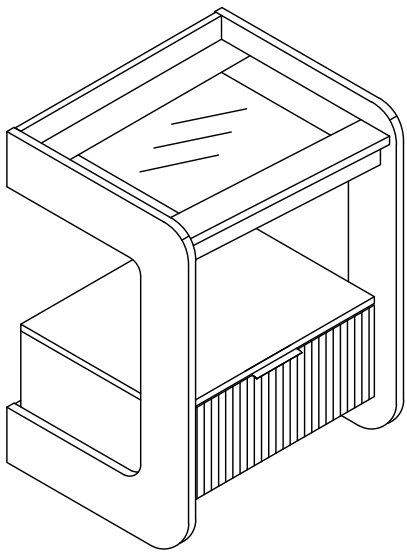

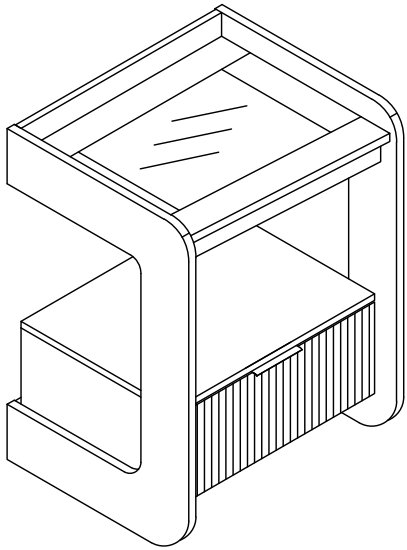

Scan the QR code
to watch the
installation video.

If you have any question,please feel free to contact us by email

Foreword:
Thank you for choosing our product!
We hope you have a great shopping experience! We aim to provide you with 100% satisfactory products and customer service. If you find the received product has any defects such as broken mirror、missing components, or you have issues about the installation instruction, please feel free to contact us without hesitation, we will reply you within 12 hours and are honored to be able to help you with professional assistance.

Specifications:
Product Name: Nightstand
Model: 2460
Package Dimension:27.2x17.7x7.9in/69x45x20cm
Product Size: 17.7x15x23.6in/45x38x60cm
Weight: 48.6lb/22kg

2460

A, B, G, H, C, D installation guide

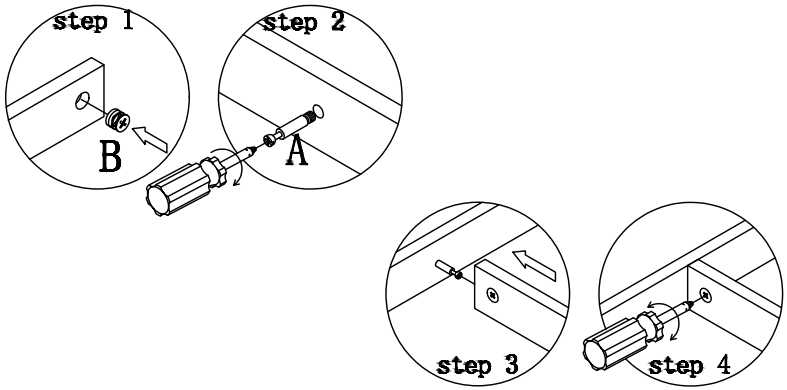

Accessories

Three-in-one screw A*49	Three-in-one nut B*68	drawer Track CR*2	drawer Track DR*2	drawer Track CL*2	drawer Track DL*2
Three-in-one screw A2*19	Handle E*2	Handle Screw F*12	Small Screw D*20	Small Screw X*10	Stool foot nail M*12
screwdriver Z*1					

2460

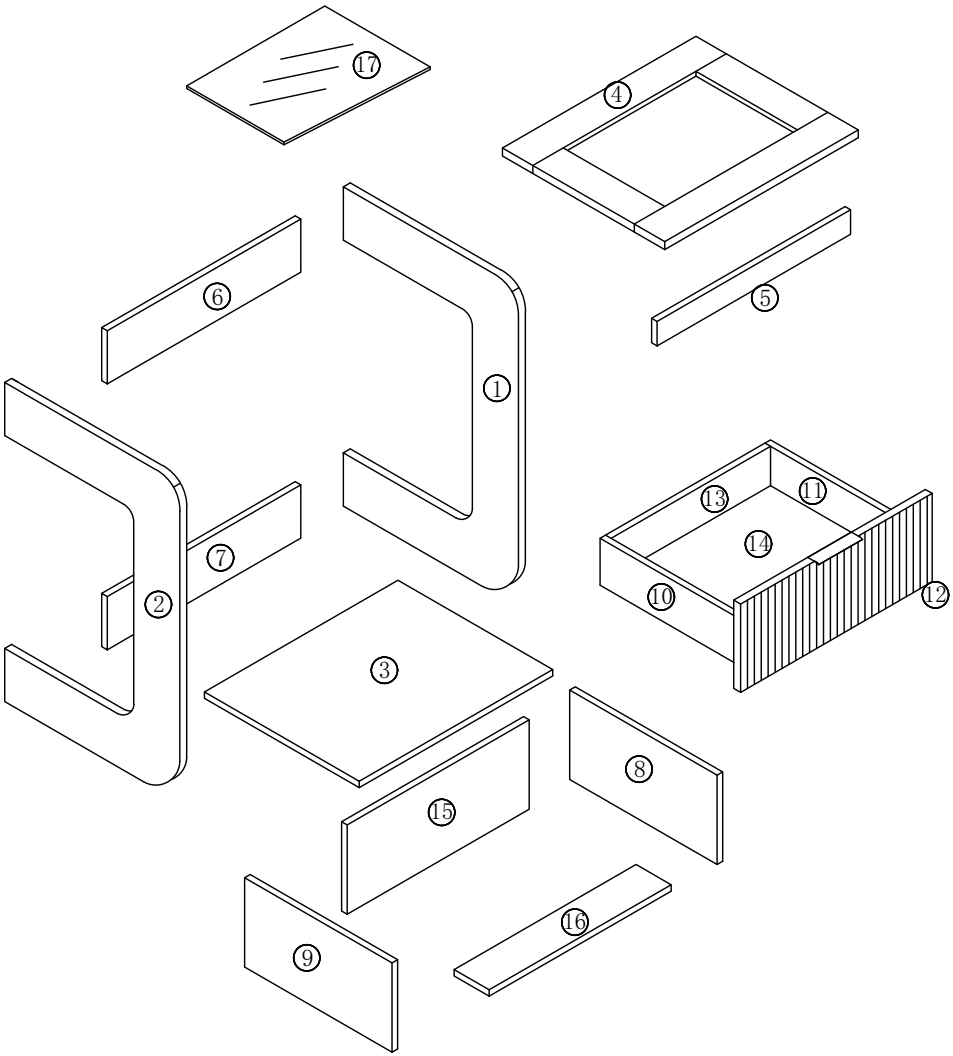

STEP 1

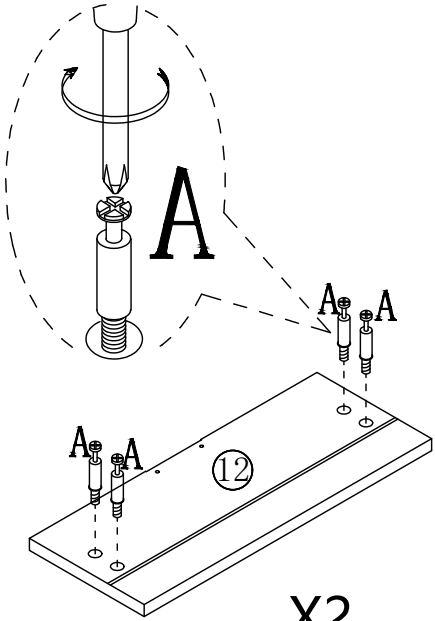

X2

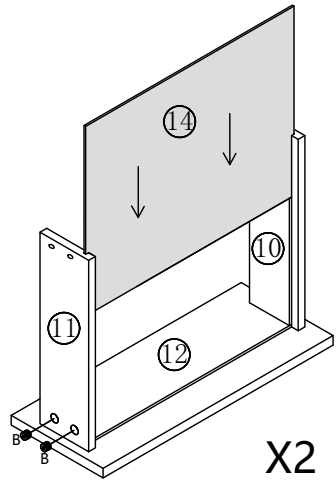

X2

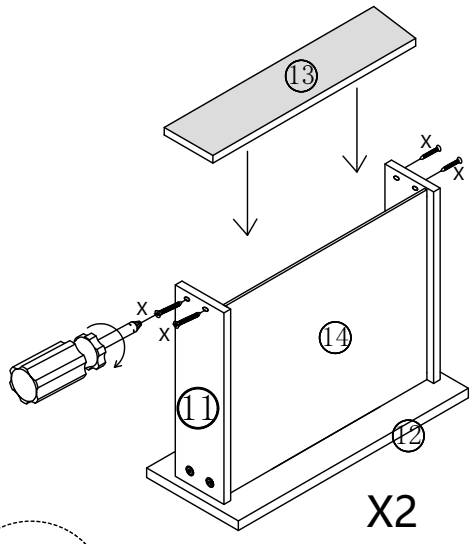

X2

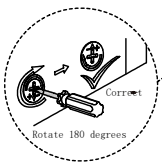

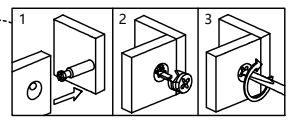

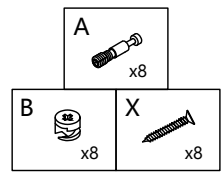

Guidelines for the use of 3-in-1 connecting rods:
The blue screw cap at the bottom of the 3-in-1 connecting rod is twist-able, and it can be twisted clockwise or counterclockwise to fit the size of the reserved holes in the wooden board.
When you use this 3-in-1 connecting rod, if you find that it can't be inserted into the reserved holes on the wooden board, just loosen the blue screw cap a bit until it fits into the holes of the board. Then use a screwdriver to tighten the screws. Note: If the bottom blue screw cap is not stretched apart by the three-in-one connecting rod in the reserved hole, the connected part will appear unstable .

STEP 2

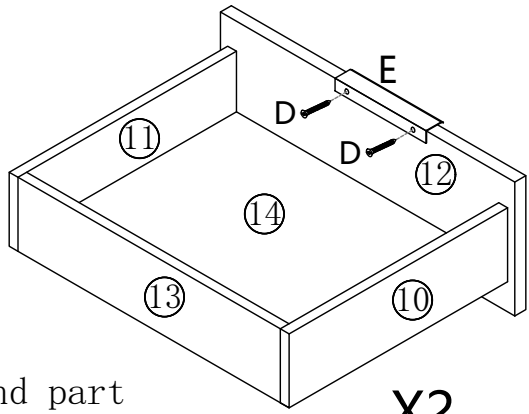

X2

Note: All part DR and part DL should be installed at the BOTTOM of the drawers (As shown in the pic).

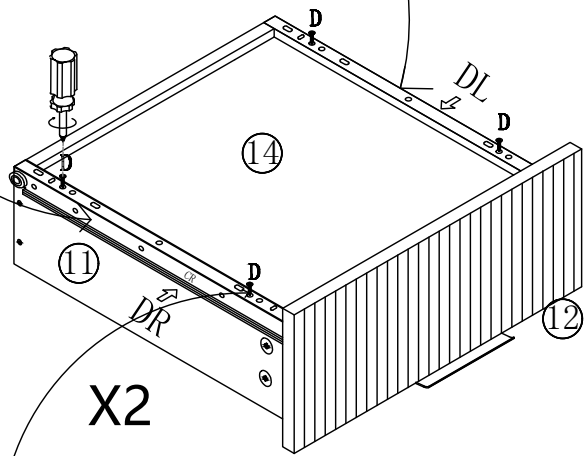

X2

No pre-drilled holes for mounting screws; just install with self-tapping screws D

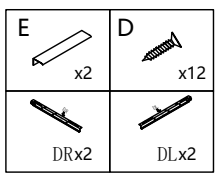

STEP 3

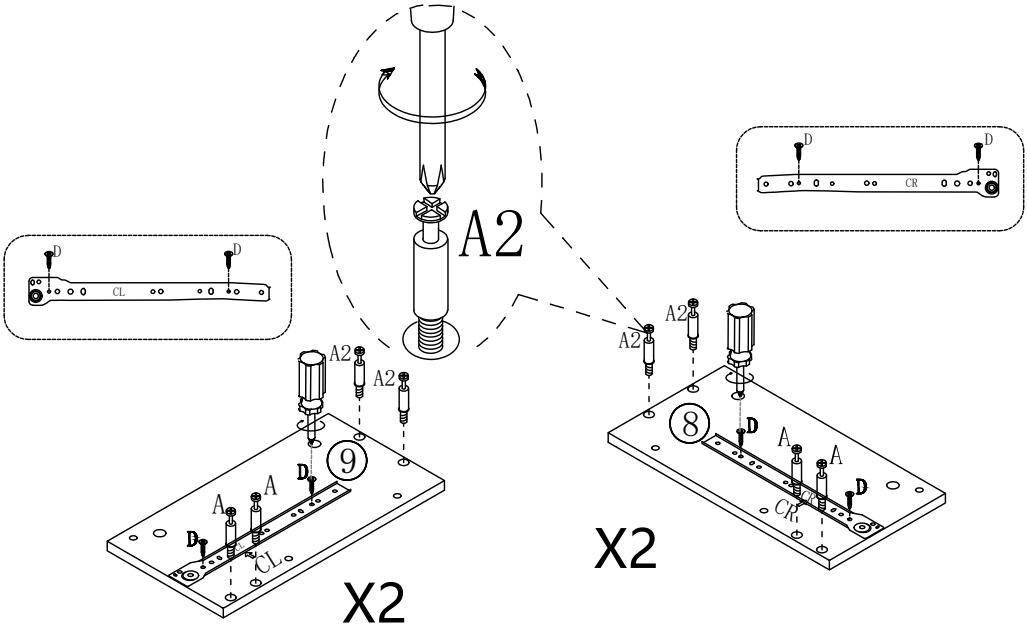
A2
D
D
CR
D
D
CL
A2
A2
A2
A2
9
D
A
A
D
CL
X2
8
D
A
A
D
CR
CR
X2

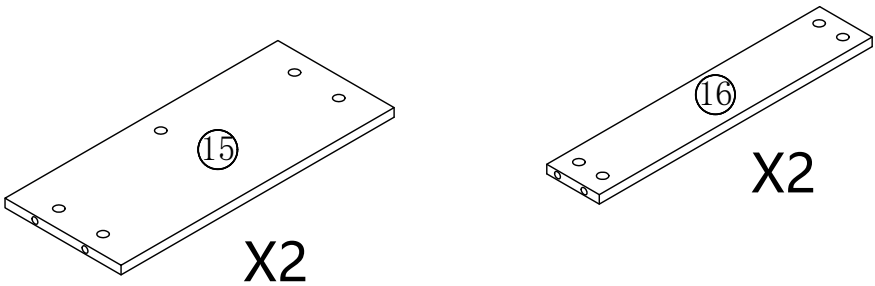
15
X2
16
X2

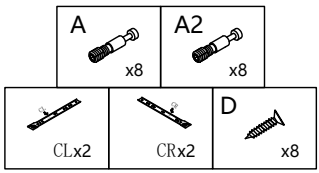
A
x8
A2
x8
CLx2
CRx2
D
x8

STEP 4

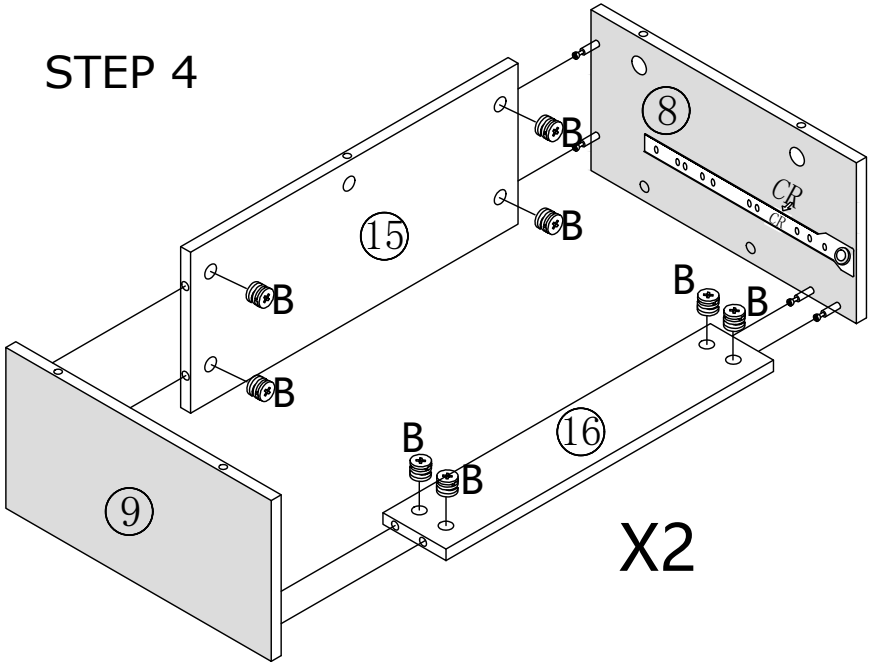
8
15
16
9
B
CR
X2

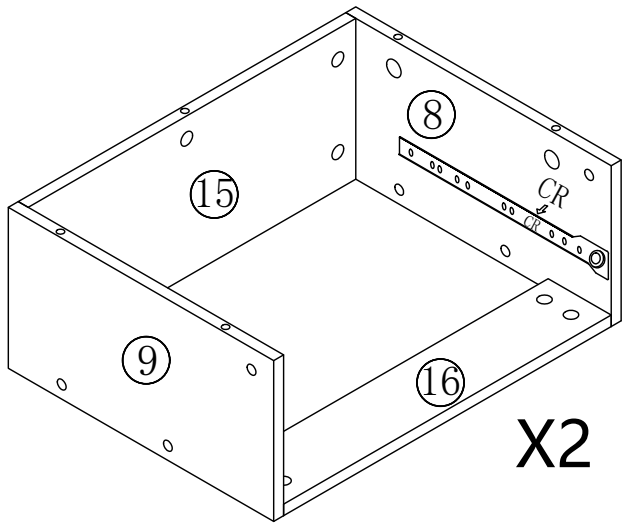
8
15
9
16
CR
X2

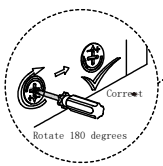
Correct
Rotate 180 degrees

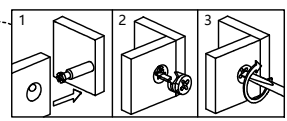
1
2
3

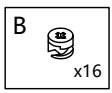
B
x16

STEP 5

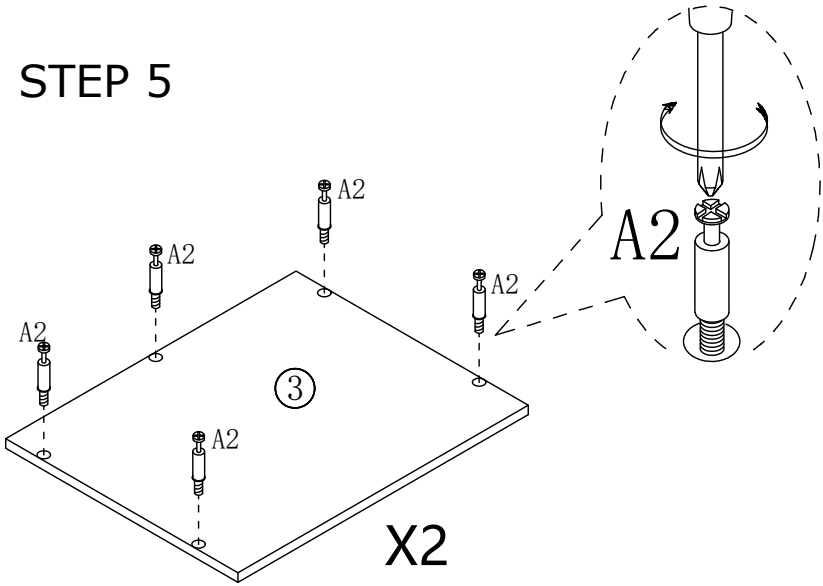
A2
A2
A2
A2
A2
A2
3
X2

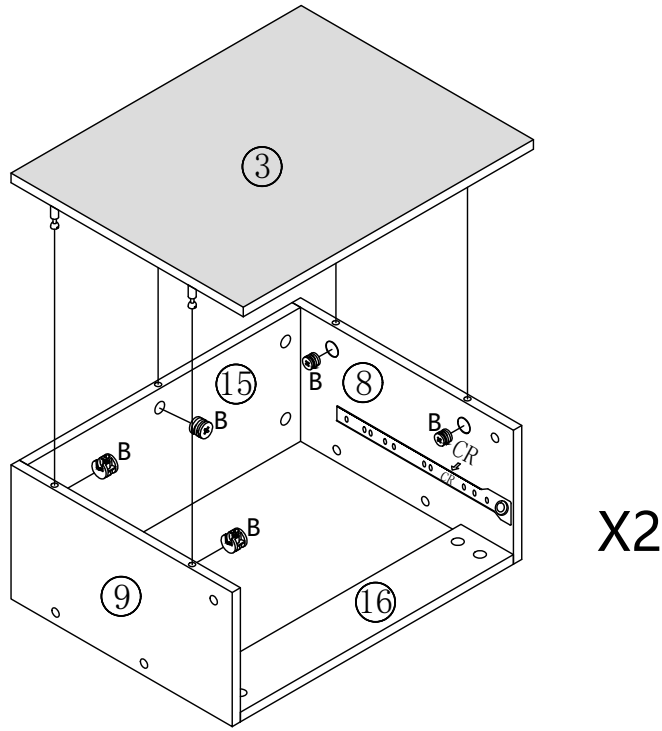
3
15
8
B
B
B
B
B
CR
CR
9
16
X2

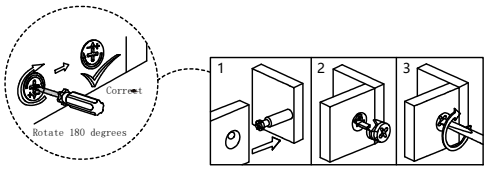
Correct
Rotate 180 degrees
1
2
3

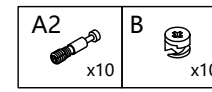
A2
x10
B
x10

STEP 6

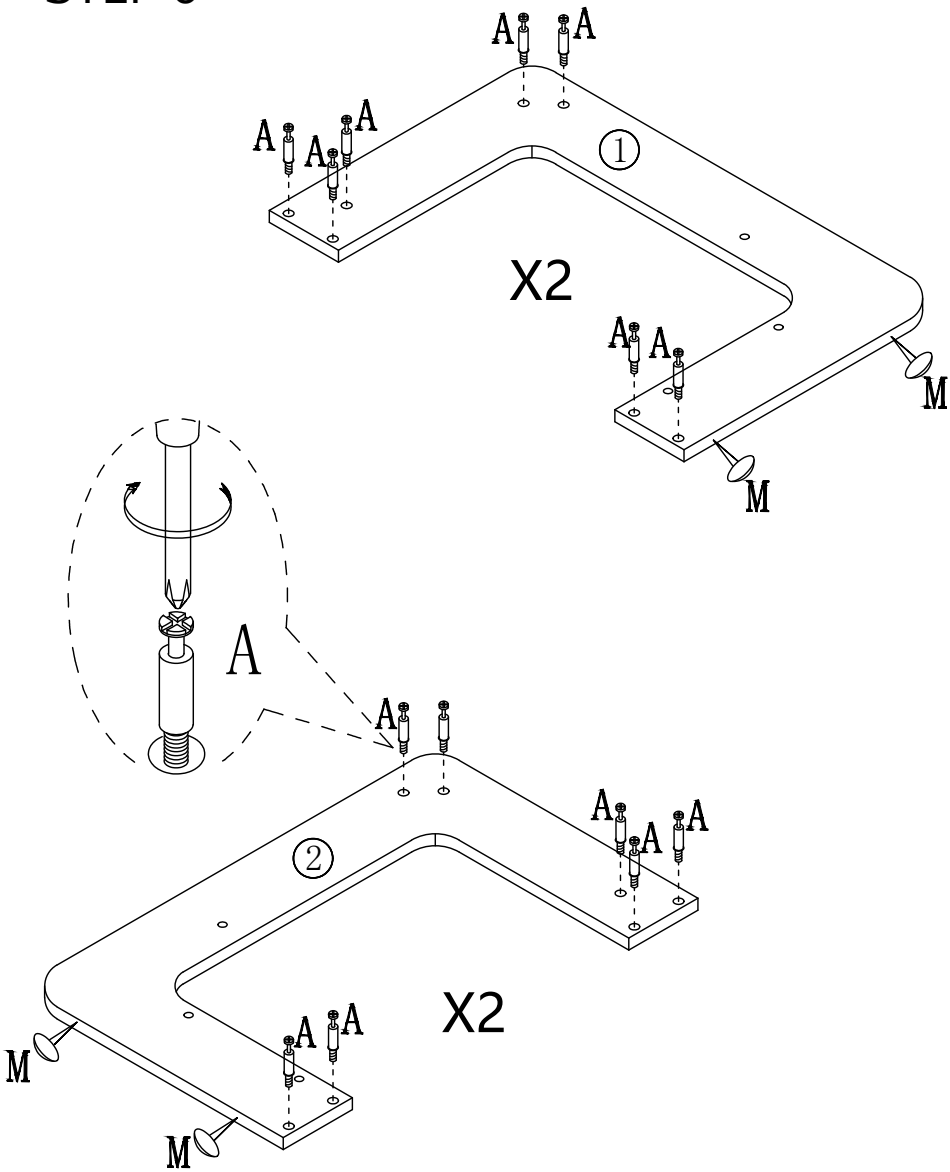

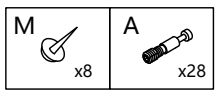

STEP 7

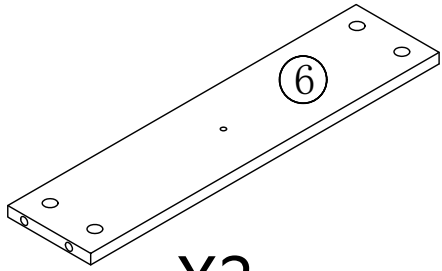

X2

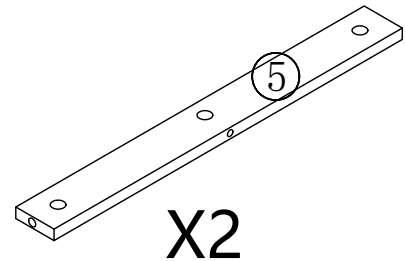

X2

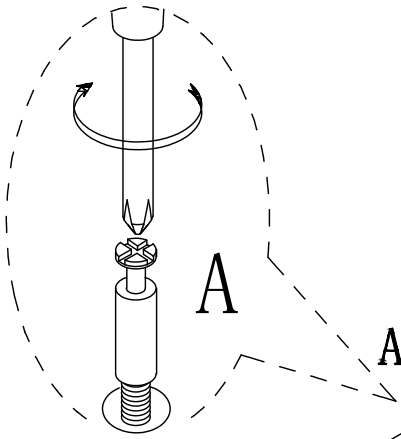

X2

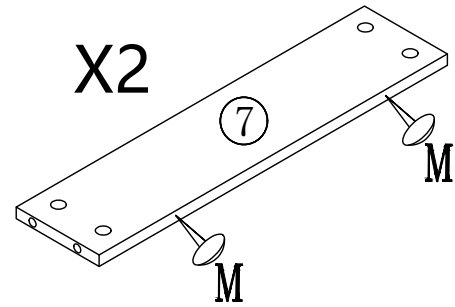

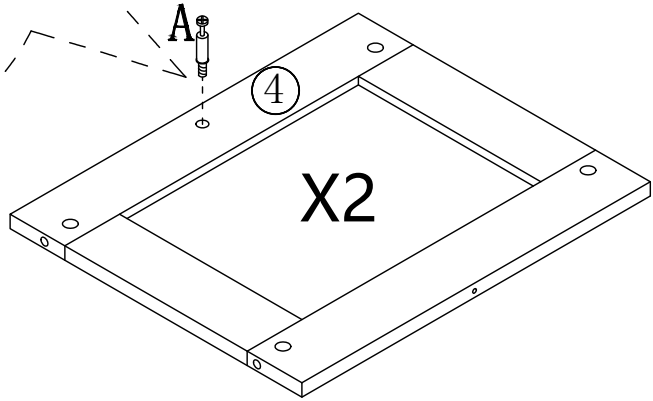

X2

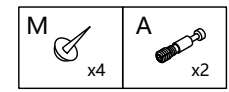

STEP 8

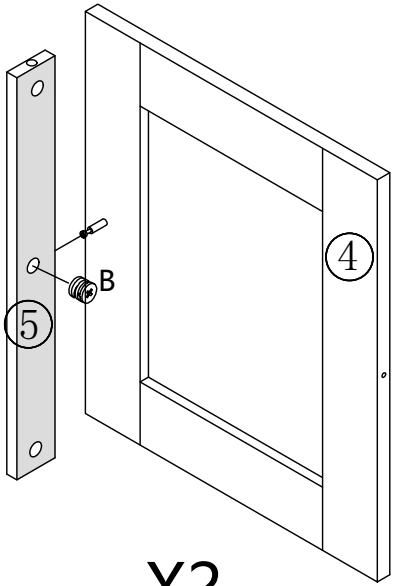

X2

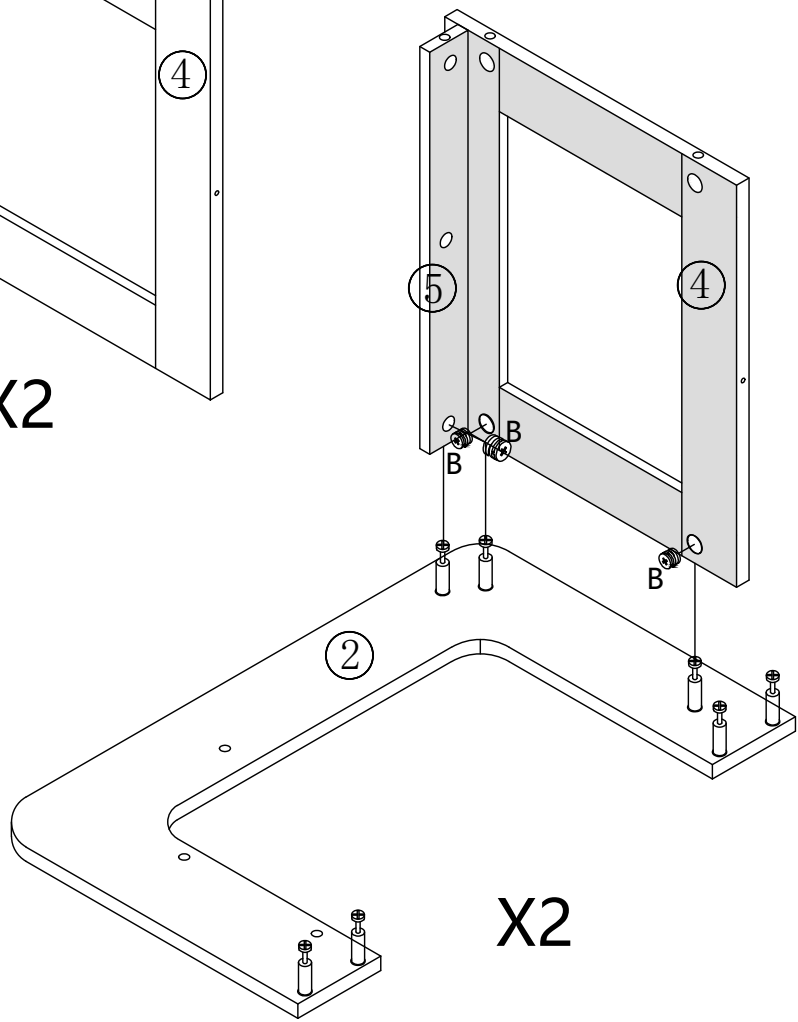

X2

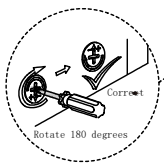

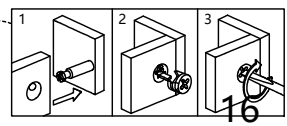

16

12

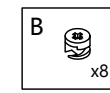

STEP 9

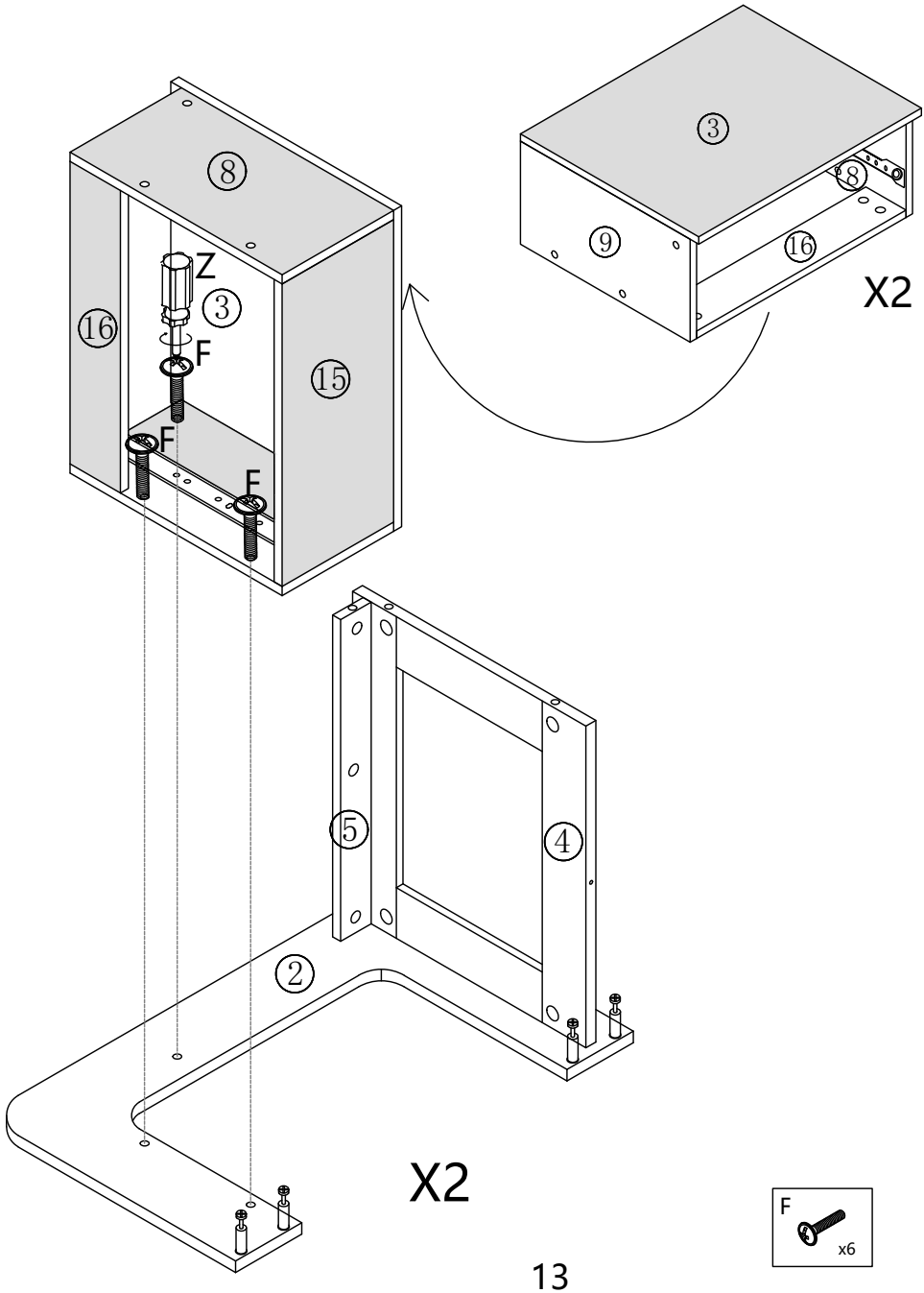

STEP 10

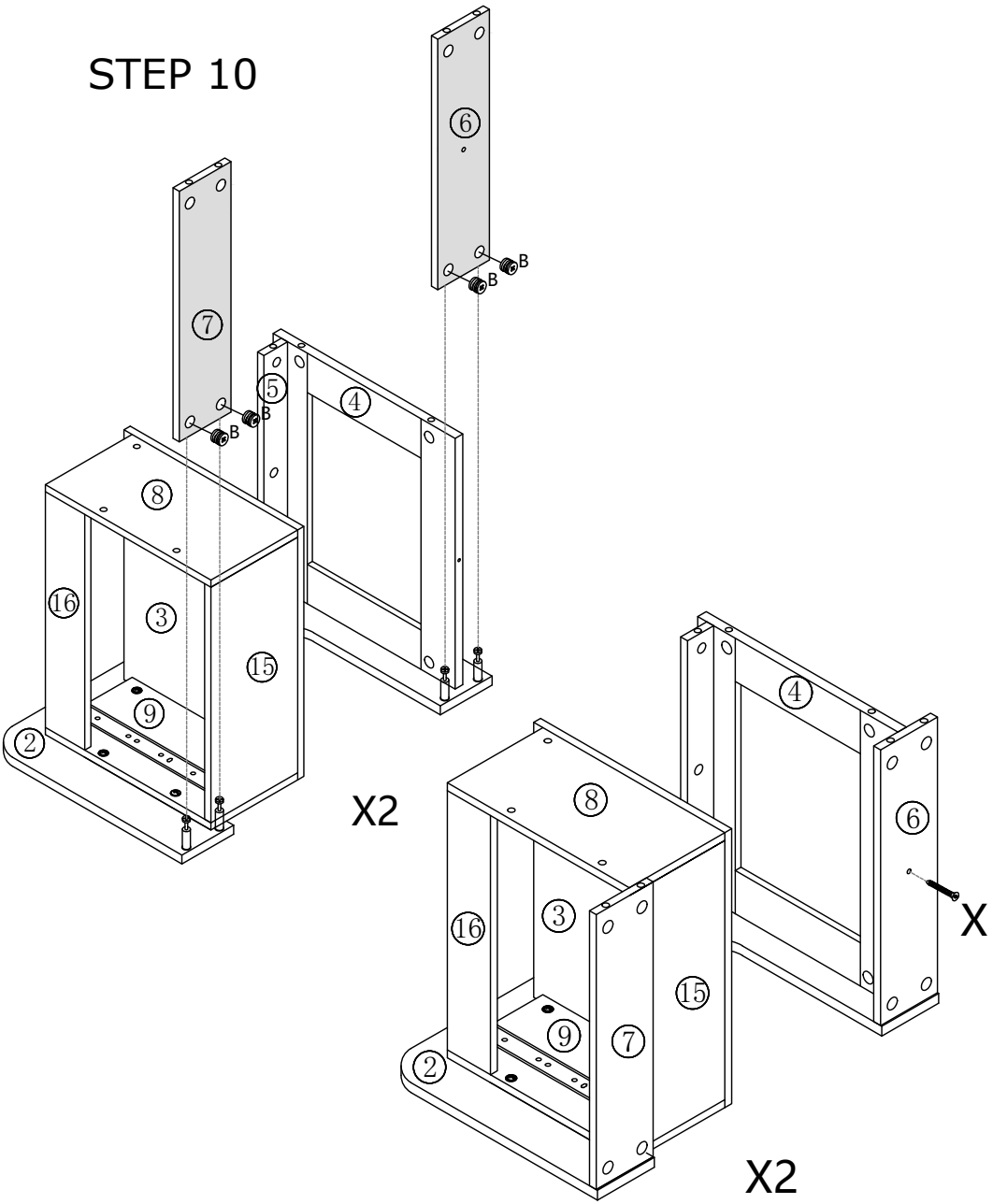
6
B
B
7
5
B
B
4
8
16
3
15
9
2
X2
4
8
6
X
16
3
15
9
7
2
X2

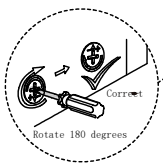
Correct
Rotate 180 degrees

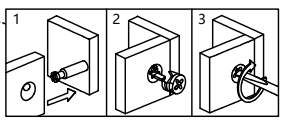
1
2
3

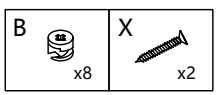
B
x8
X
x2

STEP 11

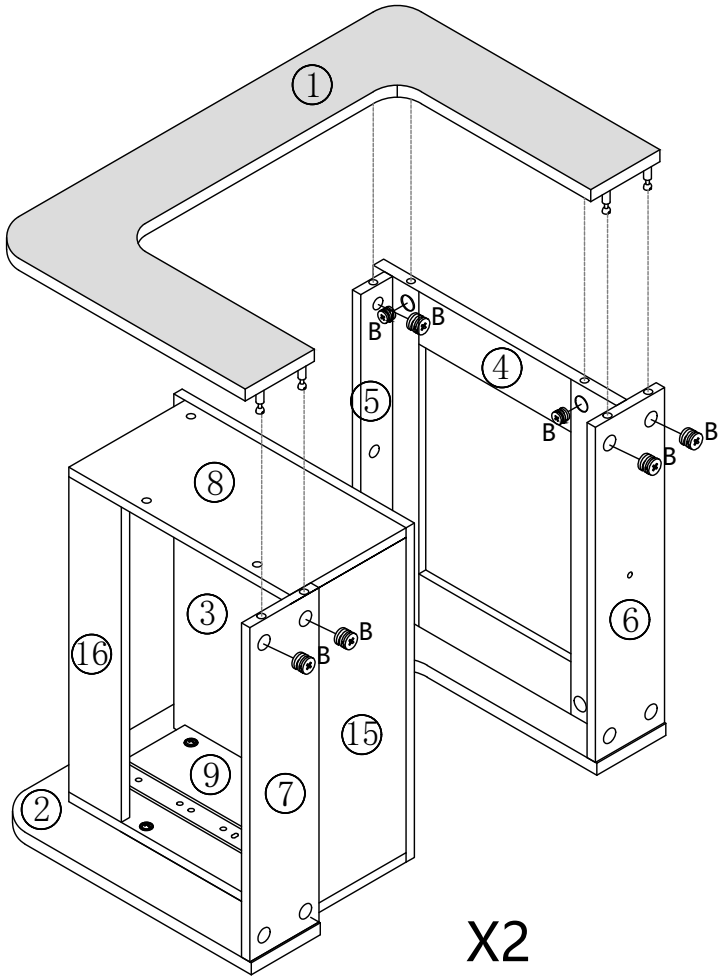
1
B
B
4
5
B
B
B
8
3
B
B
16
6
15
9
7
2

X2

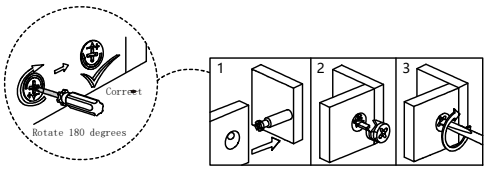
Correct
Rotate 180 degrees
1
2
3

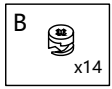
B
x14

STEP 12

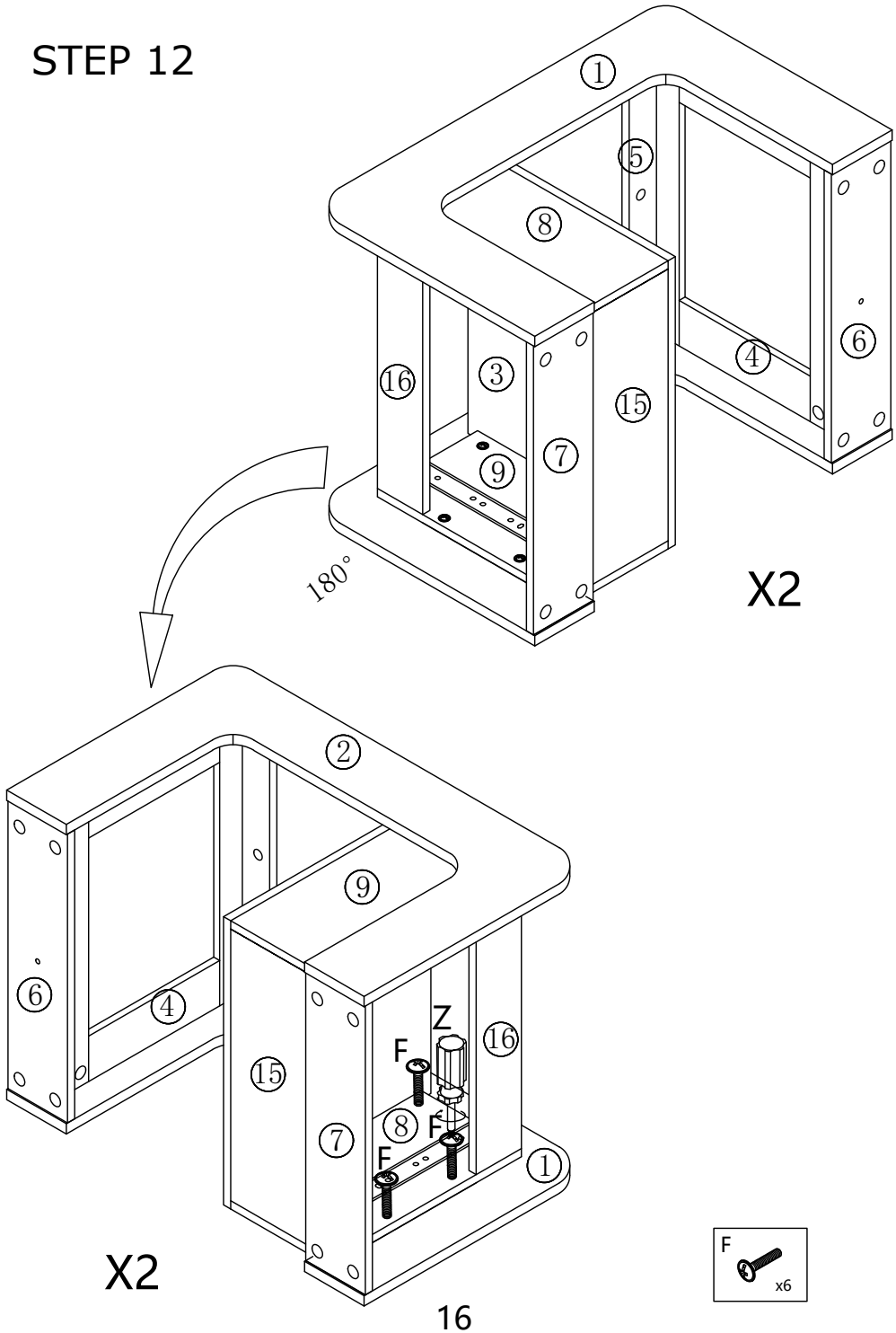

STEP 13

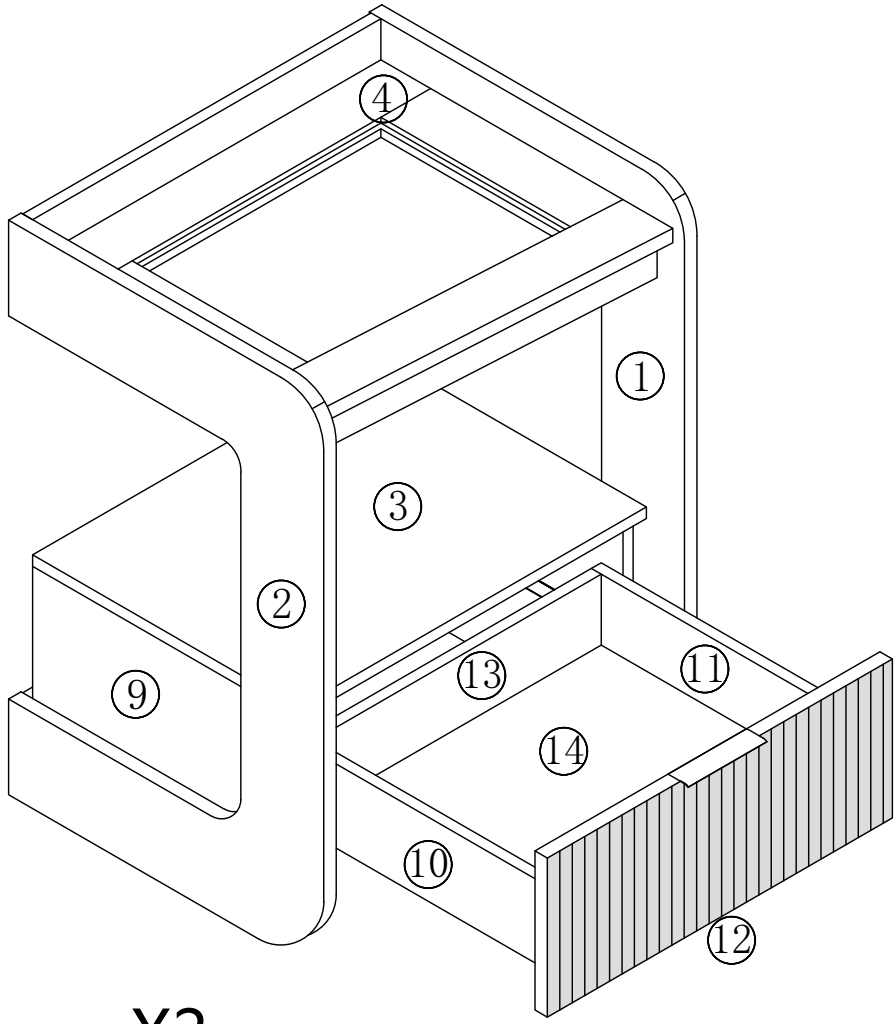

X2

STEP 14

Place the glass into
the designated frame

