Packages may not
arrive at the same time
Do not open until all
packages are received

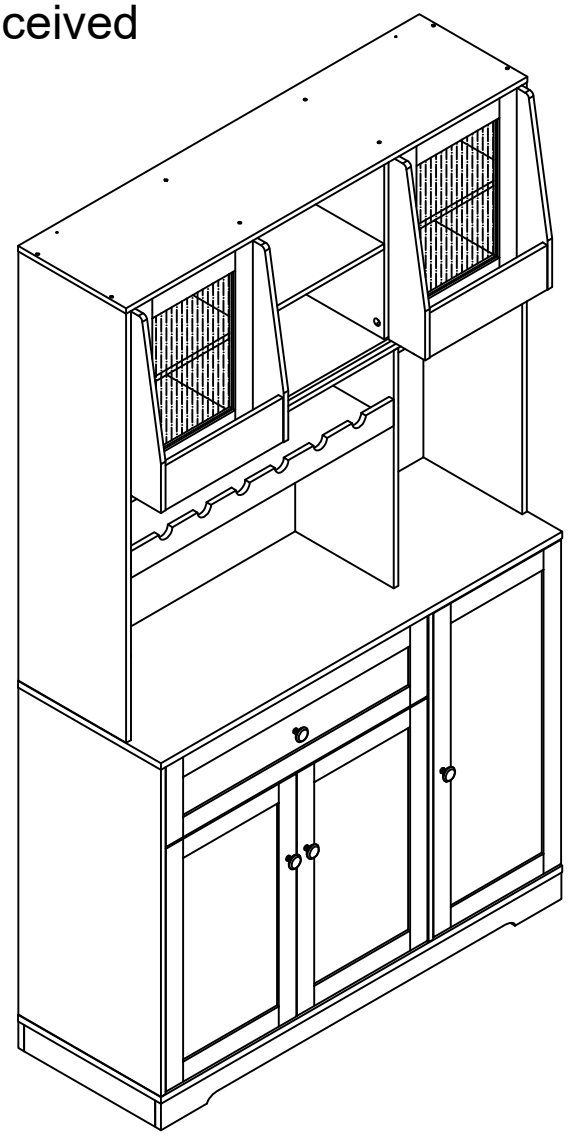

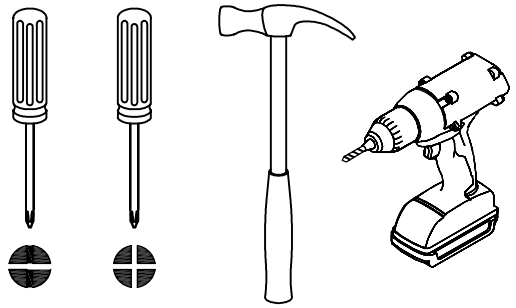

Tools required
(not included)

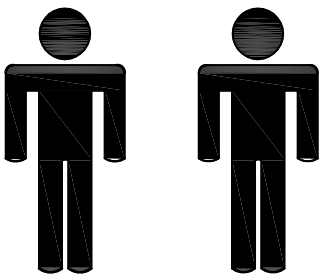

2 people for assembly

Safety and Care Advice

Important – Please read these instructions fully before starting assembly

• Check you have all the components and tools listed on the following pages.

• Remove all fittings from the plastic bags and separate them into their groups.

• Keep children and animals away from the work area, small parts could choke if swallowed.

• Make sure you have enough space to layout the parts before starting.

• During assembly do not stand or put weight on the product, this could cause damage.

• Assemble the item as close to its final position (in the same room) as possible.

• Assemble on a soft level surface to avoid damaging the unit or your floor.

• Parts of the assembly will be easier with 2 people.

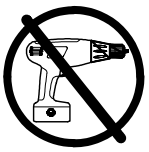

• To reduce the likelihood of damaging your product please ensure that your power drill is set on a low torque setting.

Care and maintenance

• Only clean using a damp cloth and mild detergent, do no use bleach or abrasive cleaners.

• From time to time check that there are no loose screws on this unit.

• This product should not be discarded with household waste. Take to your local authority waste disposal centre.

Handy Hints

• Assemble all parts and bolts loosely during assembly, only once the product is complete should you fully tighten the bolts

• Regularly check and ensure That all bolts and fittings are tightend properly.

WARNING

In order to help prevent overturning -
please follow these instructions

To help prevent product toppling over please follow the below steps:-

Use the anti tip stap or wall fixing method provided (if applicable)
Do not allow children to climb or hang on the furniture
Do not open more than one drawer at a time
Do not place heavy items in the top drawers
Do not place heavy items on top of the furniture, unless the furniture has been designed for this purpose

Please note that only the anti tip strap is provided.
You will need to provide wall plugs and screws applicable for your wall type

Notes:

1. ASSEMBLY PREPARATION AND TIPS FOR ASSEMBLY

1). Remove all packaging materials, staples and packing straps from the carton.
2). Refer to Parts List and Hardware List, and ensure parts and hardware are correct before assembly. Contact customer service for missing parts.
3). Place all wooden parts on a clean, flat and soft surface (e.g. carpet or rug) to prevent scratch and damage to parts.
4). Allow ample room for assembly and assemble the product near where the product will be placed.
5). During assembly, do not over-tighten any fittings as this may cause damage.
6). Always place the product on a flat, level surface.

2. CARE AND MAINTENANCE

1). KEEP ALL HARDWARE PARTS OUT OF REACH OF CHILDREN.
2). Wipe clean with a soft, dry cloth; avoid the use of harsh chemicals or household cleaners as they may damage the exterior finish of the furniture.
3). Hardware may loosen over time. Periodically, check that all connections are tight; re-tighten as necessary.

3. TIPS TO PROTECT & CARE FOR YOUR FURNITURE

1). Avoid placing your furniture in direct sunlight, as sunlight causes fading.
2). Use a protective pad when writing on the furniture surface.
3). Use cutting boards and trivets for food preparation in order to avoid damaging the top for the unit.

⚠WARNING





Childrenhavediedfrom furnituretipover.Toreducetheriskoffurniture tipover:

- **ALWAYSinstalltipoverrestraintprovided.**
- **NEVERputaTVonthisproduct.**
- **NEVERallowchildrentostand.climborhang ondrawers,doors,orshelves.**
- **NEVERopenmorethanonedraweratatime.**
- **Placeheaviestitemsinthelowestdrawers.**

Thisisapermanentlabel.
Donotremove!

ASSEMBLY OVERVIEW

2-Person Assembly

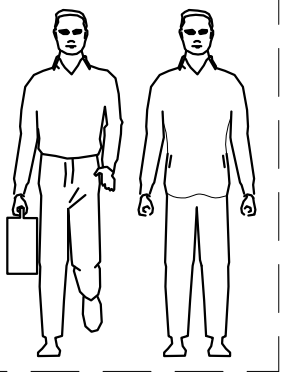

PART LIST

1 X1 PCS 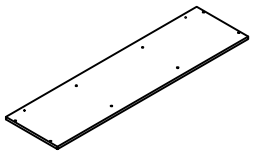	2 X1 PCS 	3 X1 PCS 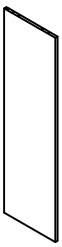	4 X2 PCS 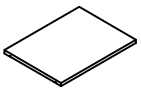	5 X1 PCS 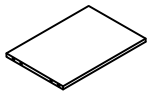
6 X1 PCS 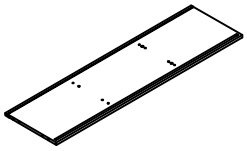	7 X1 PCS 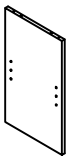	8 X1 PCS 	9 X1 PCS 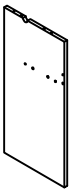	10 X1 PCS 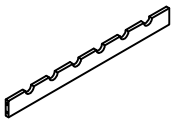
11 X1 PCS 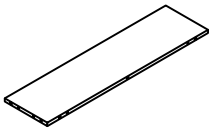	12 X1 PCS 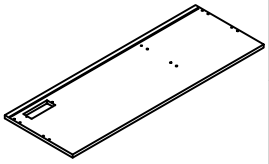	13 X1 PCS 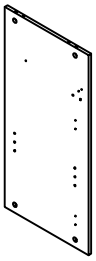	14 X1 PCS 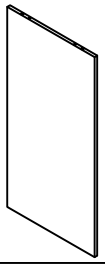	15 X1 PCS 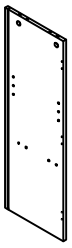
16 X1 PCS 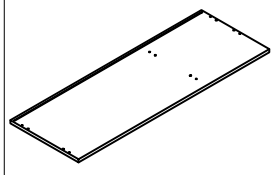	17 X1 PCS 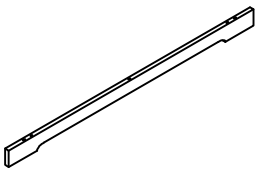	18 X1 PCS 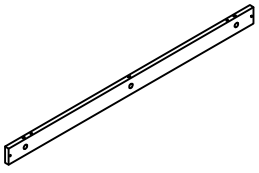	19 X2 PCS 	20 X1 PCS 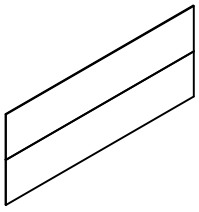
21 X1 PCS 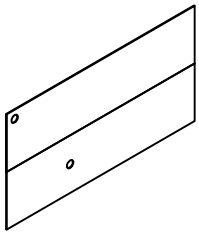	22 X1 PCS 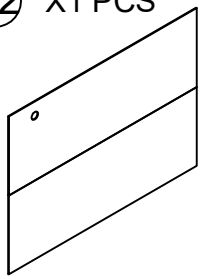	23 X1 PCS 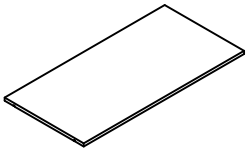	24 X1 PCS 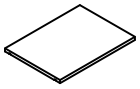	25 X1 PCS 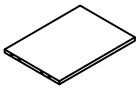

PART LIST

26 X2 PCS 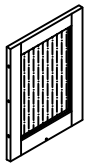	27 X2 PCS 	28 X2 PCS 	29 X2 PCS 	30 X2 PCS 
31 X1 PCS 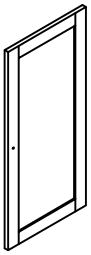	32 X1 PCS 	33 X1 PCS 	34 X1 PCS 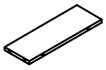	35 X1 PCS 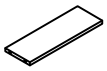
36 X1 PCS 	37 X1 PCS 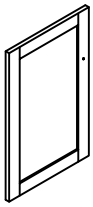	38 X1 PCS 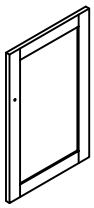	39 X1 PCS 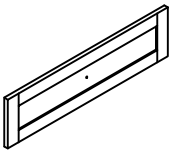	40 X1 PCS 
41 X1 PCS 	42 X1 PCS 	43 X1 PCS 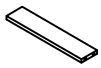	44 X1 PCS 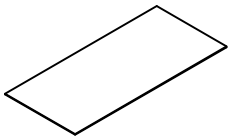	45 X1 PCS 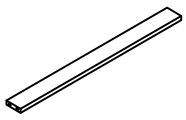
46 X3 PCS 				

HARDWARE LIST

A  Ø6*35mm 99 PCS (Extra 4)	B  Ø15*10mm 99 PCS (Extra 4)	C  Ø6*30mm 68PCS (Extra 4)	D 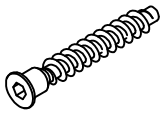 M5*48mm 22PCS (Extra 2)	E 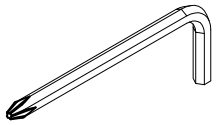 S3 1PCS
F 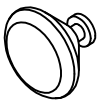 4PCS	G  M4*20mm 3PCS(Extra 1)	H  M4*10mm 1PCS(Extra 1)	I 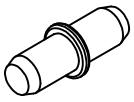 20PCS(Extra 2)	J 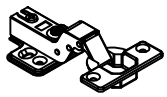 Ø35mm 4 PCS
K 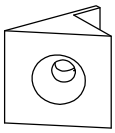 19 PCS (Extra 3)	L 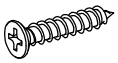 Ø3*16mm 19 PCS (Extra 3)	M 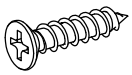 Ø3.5*12mm 88 PCS (Extra 4)	N 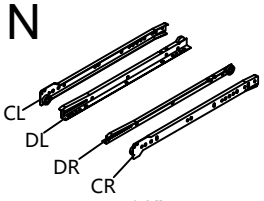 12" 1 PCS	O 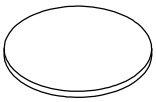 Ø20mm 22 PCS (Extra 2)
P 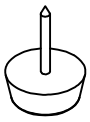 Ø12*4mm 11PCS (Extra 1)	Q 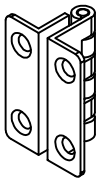 3 PCS	R 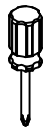 1 PCS	S 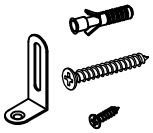 2 PCS	T 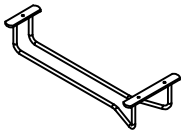 2 PCS
U  1 PCS	V 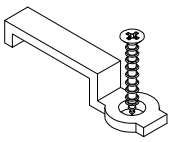 3 PCS (Extra 1)	W 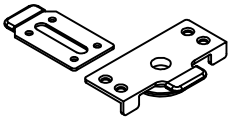 4PCS	X 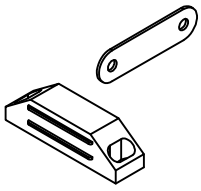 1PCS	Y 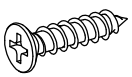 Ø3*14mm 2PCS (Extra 1)
Z 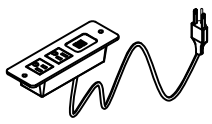 1 PCS				

Instructions For Fastening
CAM-BOLT and CAM-LOCK

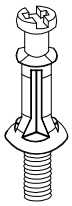

CAM-BOLT



CAM-LOCK

Tools Required

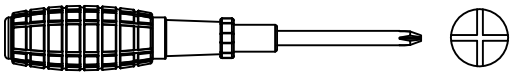

INSERTING AND TIGHTENING CAM-BOLT

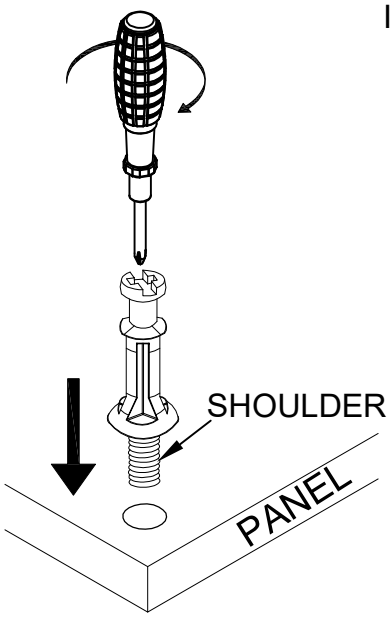

Place Cam-bolt on pre-drilled hole and screw in vertically

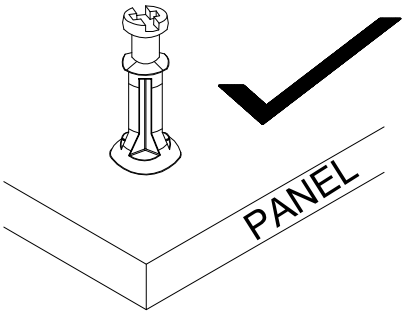

Shoulder is flushed (on the same level) with the panel.

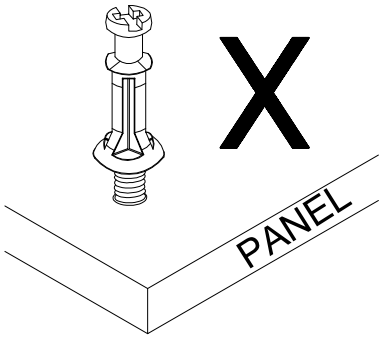

Shoulder is above the panel.

Place Cam-bolt on the designated pre-drilled holes on the panel. Use a Phillips Screwdriver to screw-in Cam-bolt vertically until shoulder is flushed (on the same level) with panel.

INSERTING CAM-LOCK

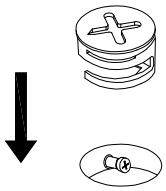

Insert Cam-lock with arrow align to Cam-bolt head

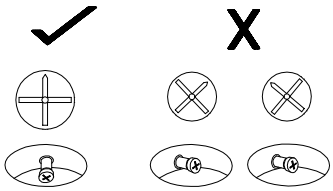

CORRECT WRONG

TIGHTENING CAM-LOCK

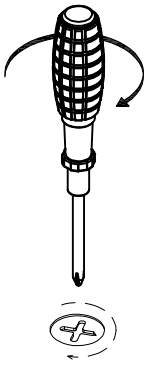

Align the arrow on the Cam-lock to the Cam-bolt head and insert the Cam-lock. Ensure Cam-lock is fully inserted.

Use a Flat-head Screwdriver to turn Camlock clockwise so it locks onto the head of the Cam-bolt. Turn until it is snug (about 3/4ths of a turn) -- over-tightening could damage Cam-lock or/and Cam-bolt.

Step 1.



U x1

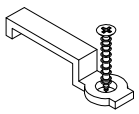

V x3

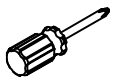

R x1

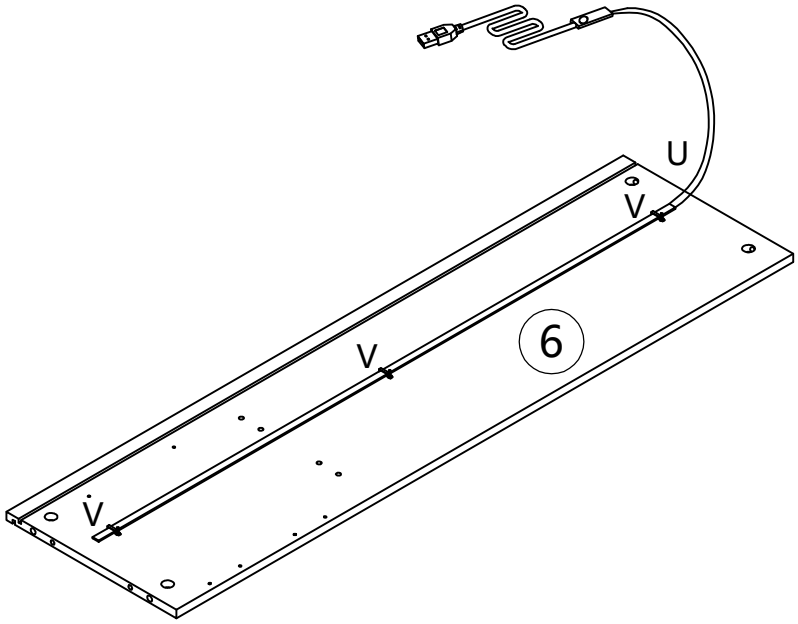

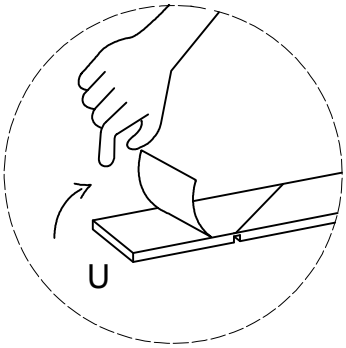

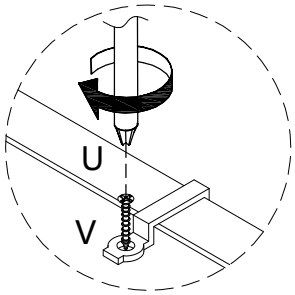

Step 2.

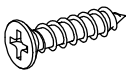

M x6

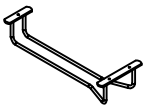

T x2

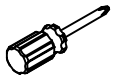

R x1

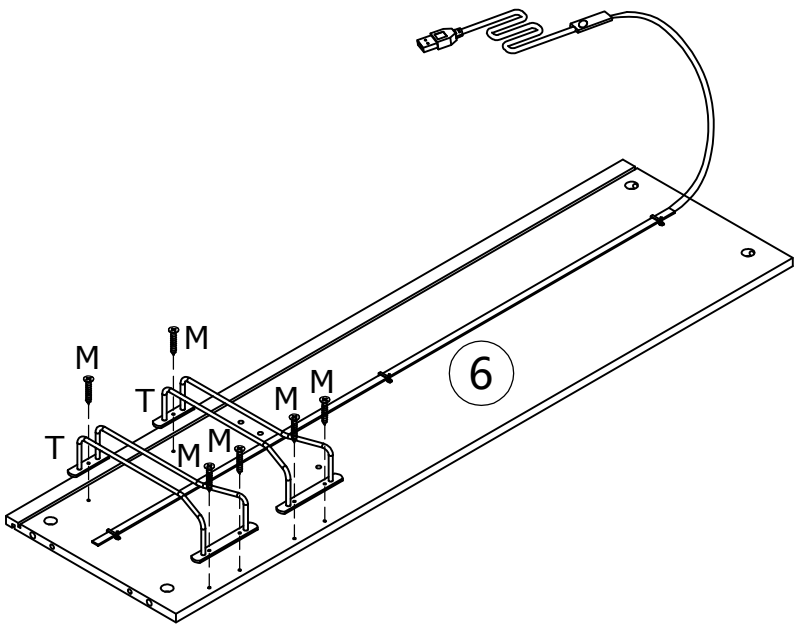

Step 3.

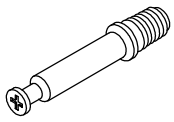

A x3

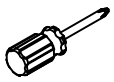

R x1

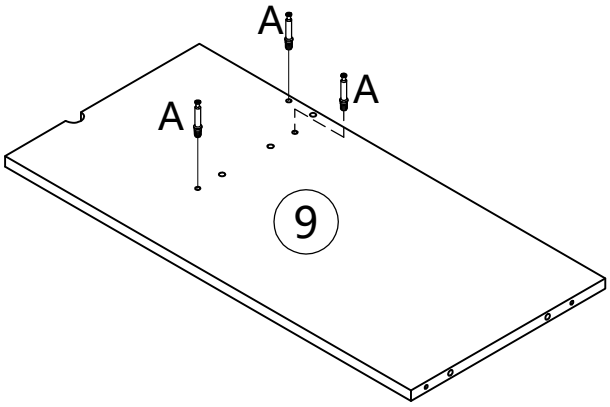

Step 4.

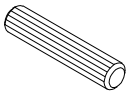

C x2

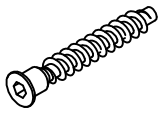

D x2

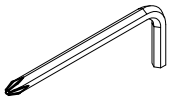

E x1

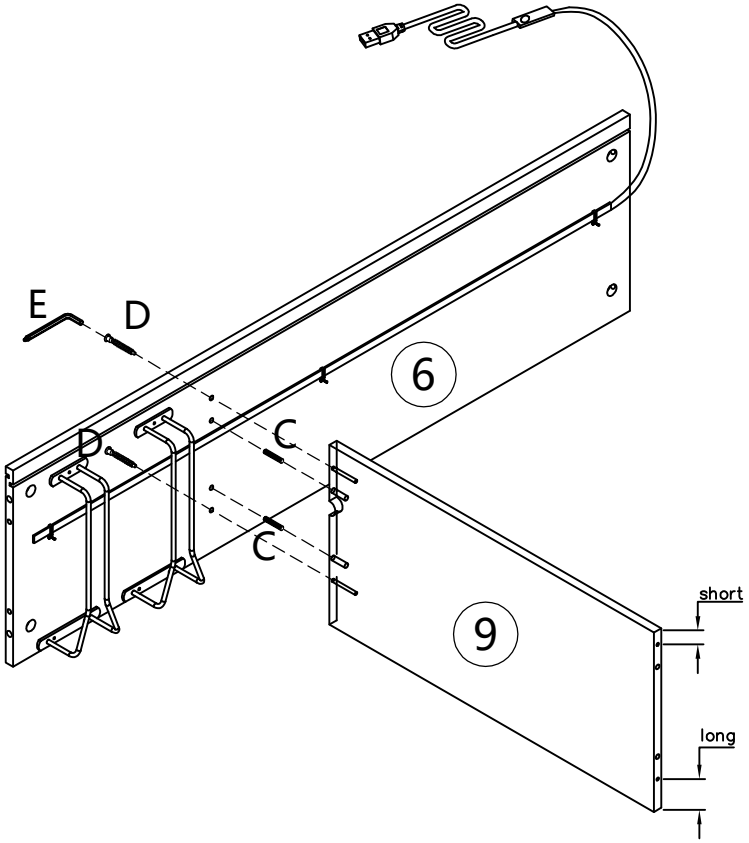

Step 5.

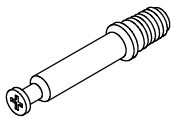

A x3

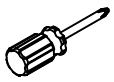

R x1

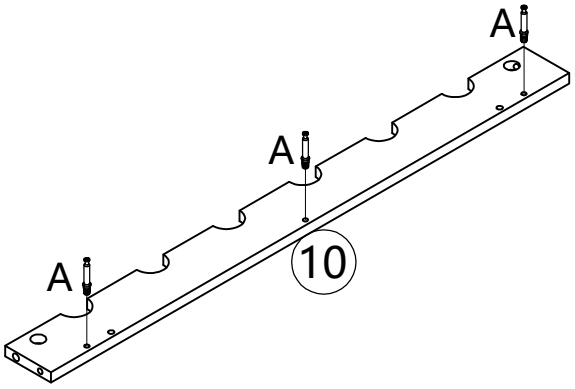

Step 6.



B x3

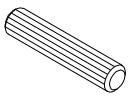

C x2

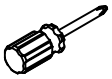

R x1

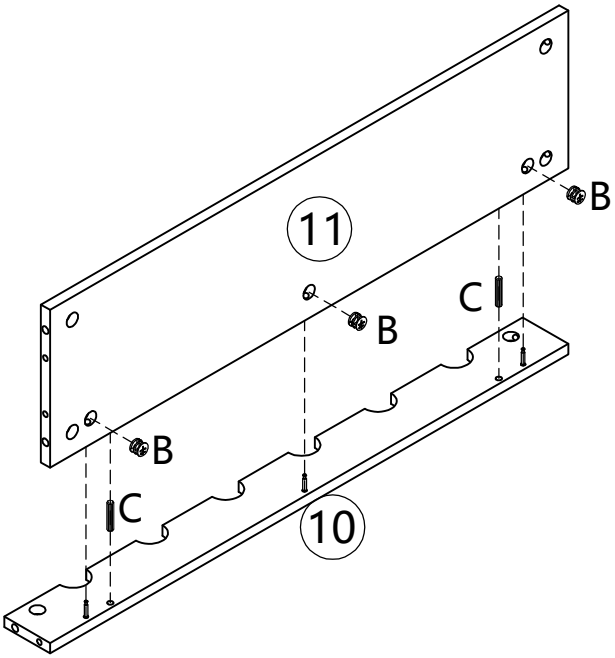

Step 7.

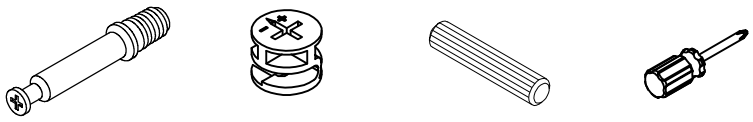

A x5 B x3 C x3 R x1

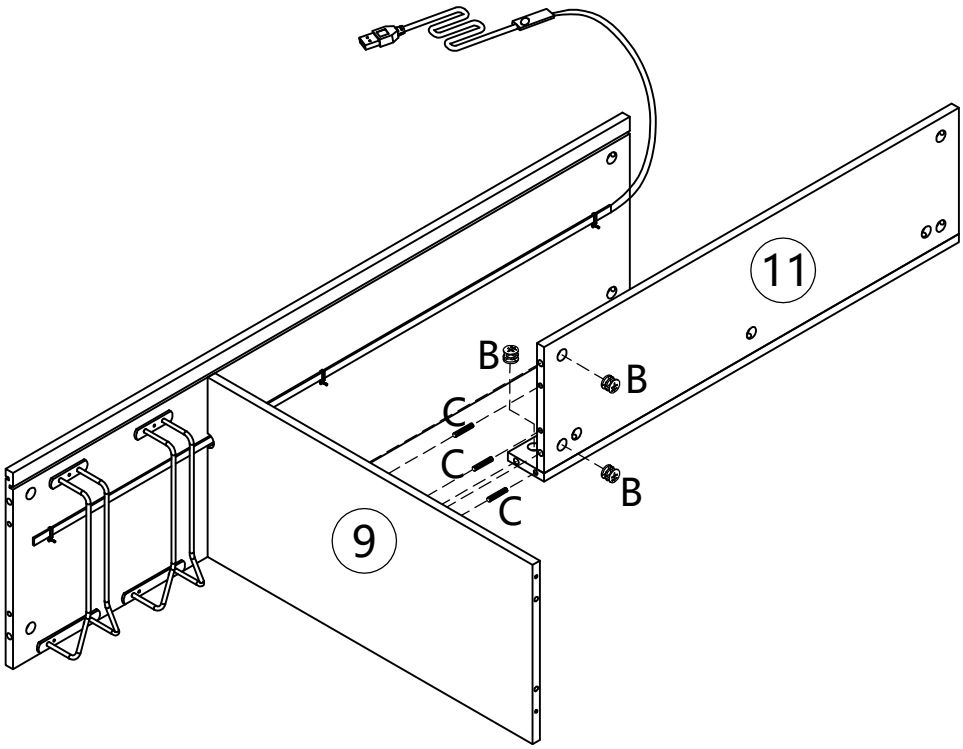

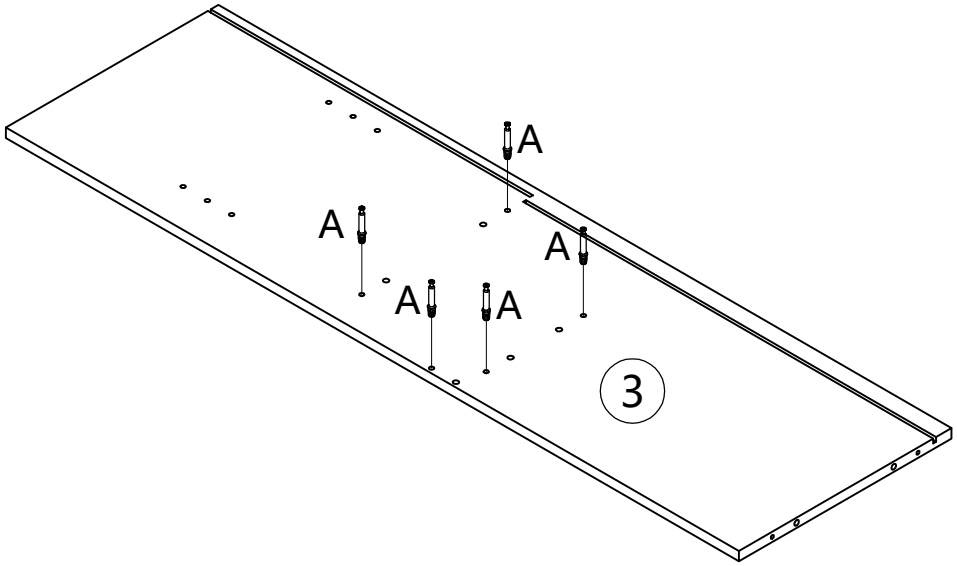

Step 8.

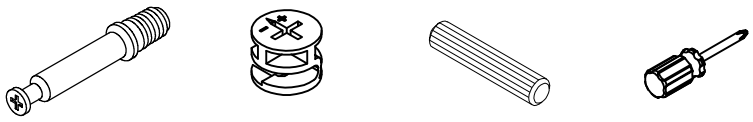

A x2 B x5 C x5 R x1

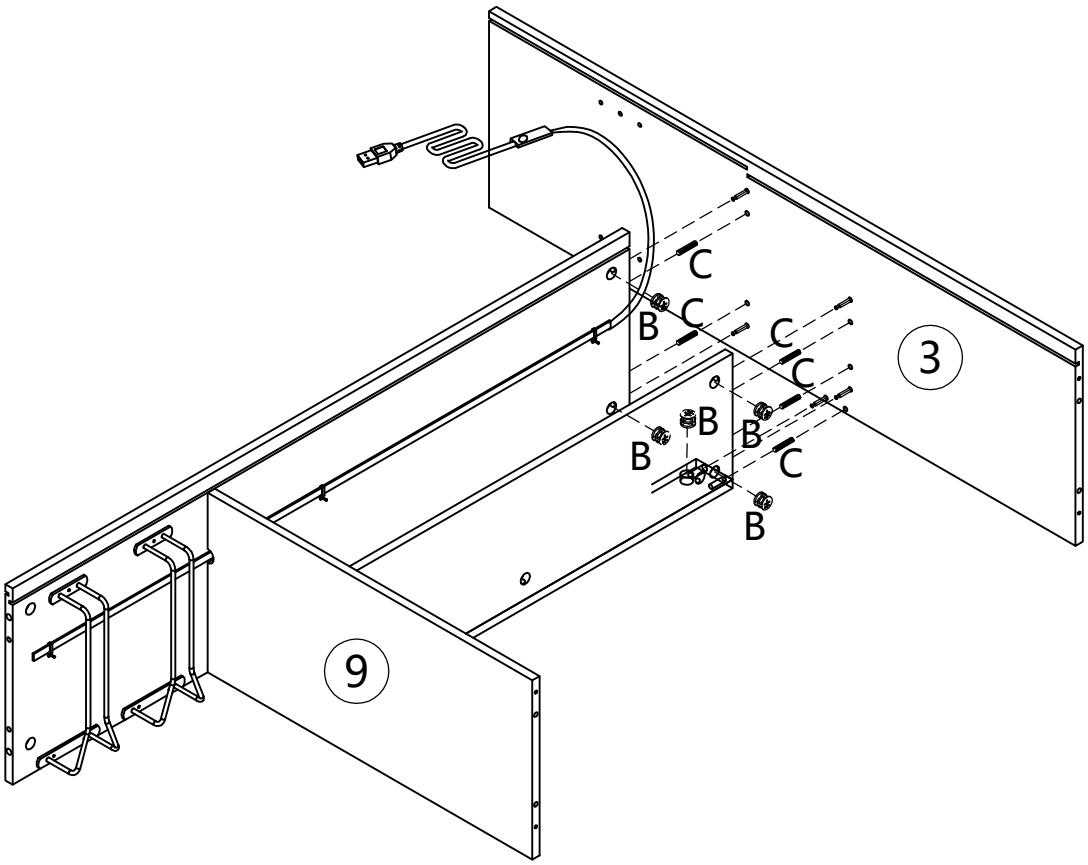

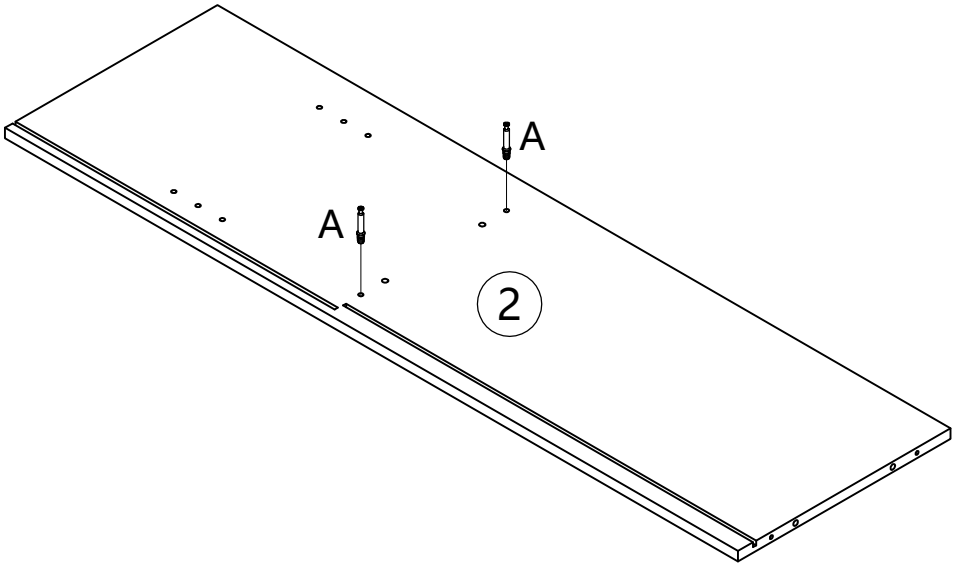

Step 9.



B x2

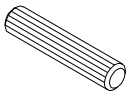

C x2

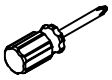

R x1

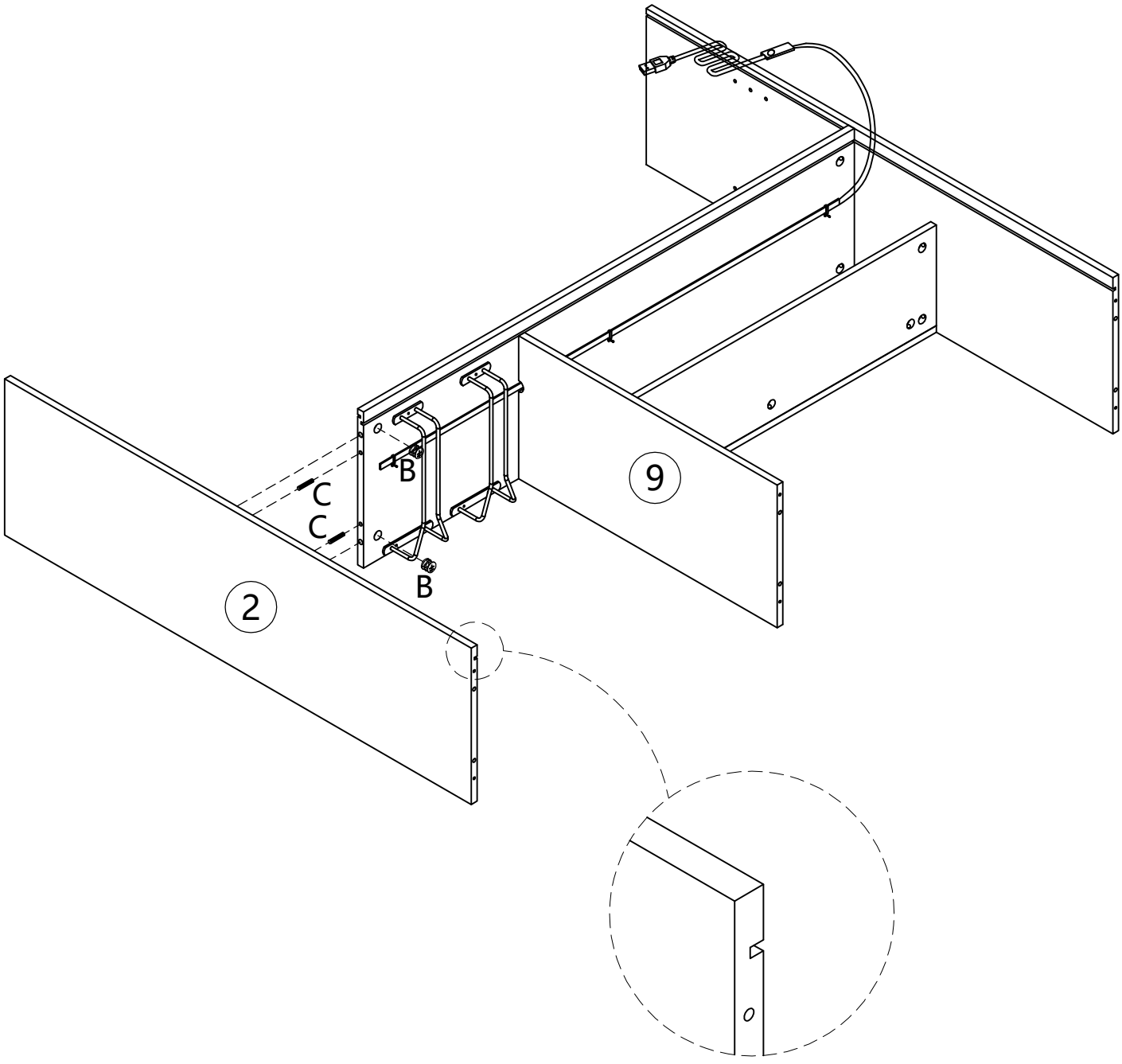

Step 10.

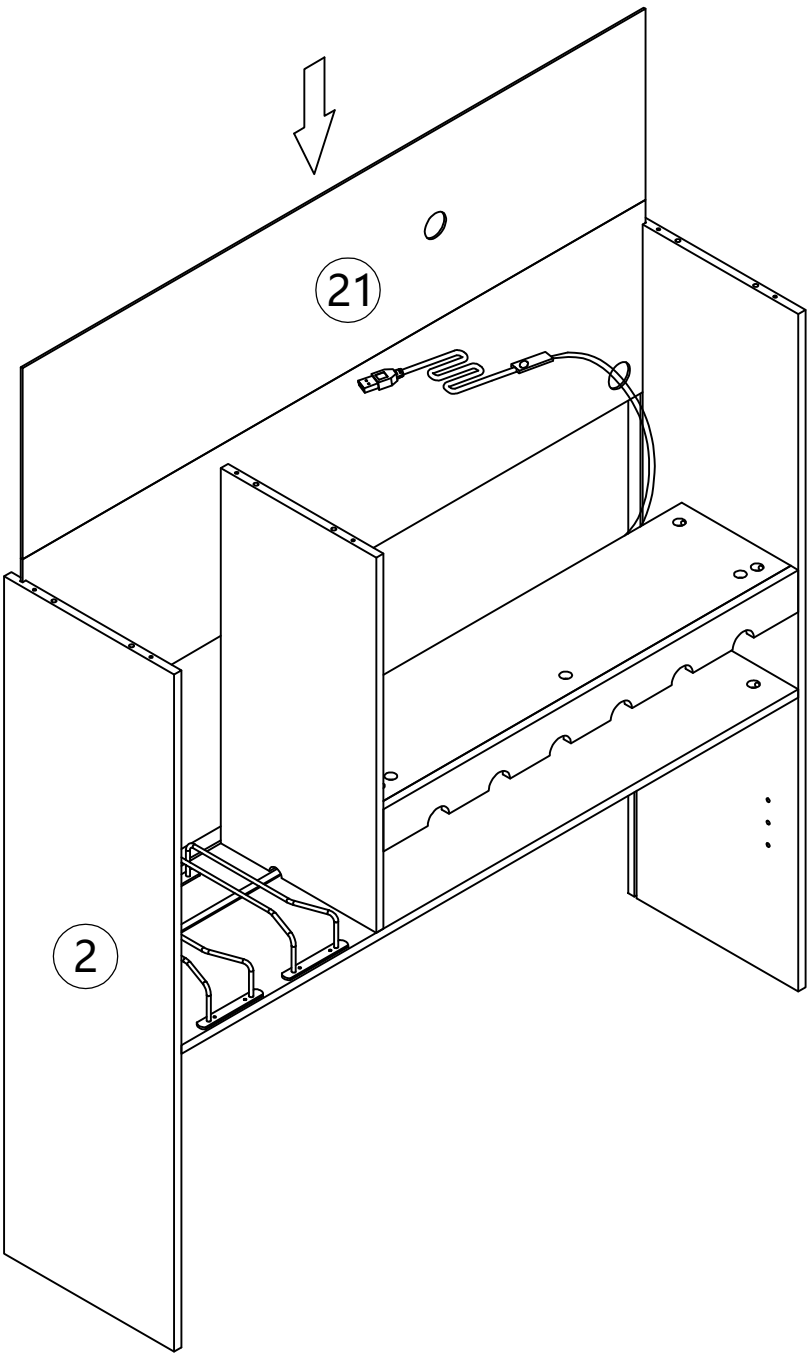

Step 11.

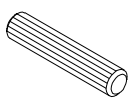

C x6

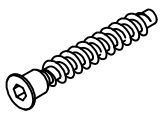

D x6

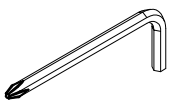

E x1

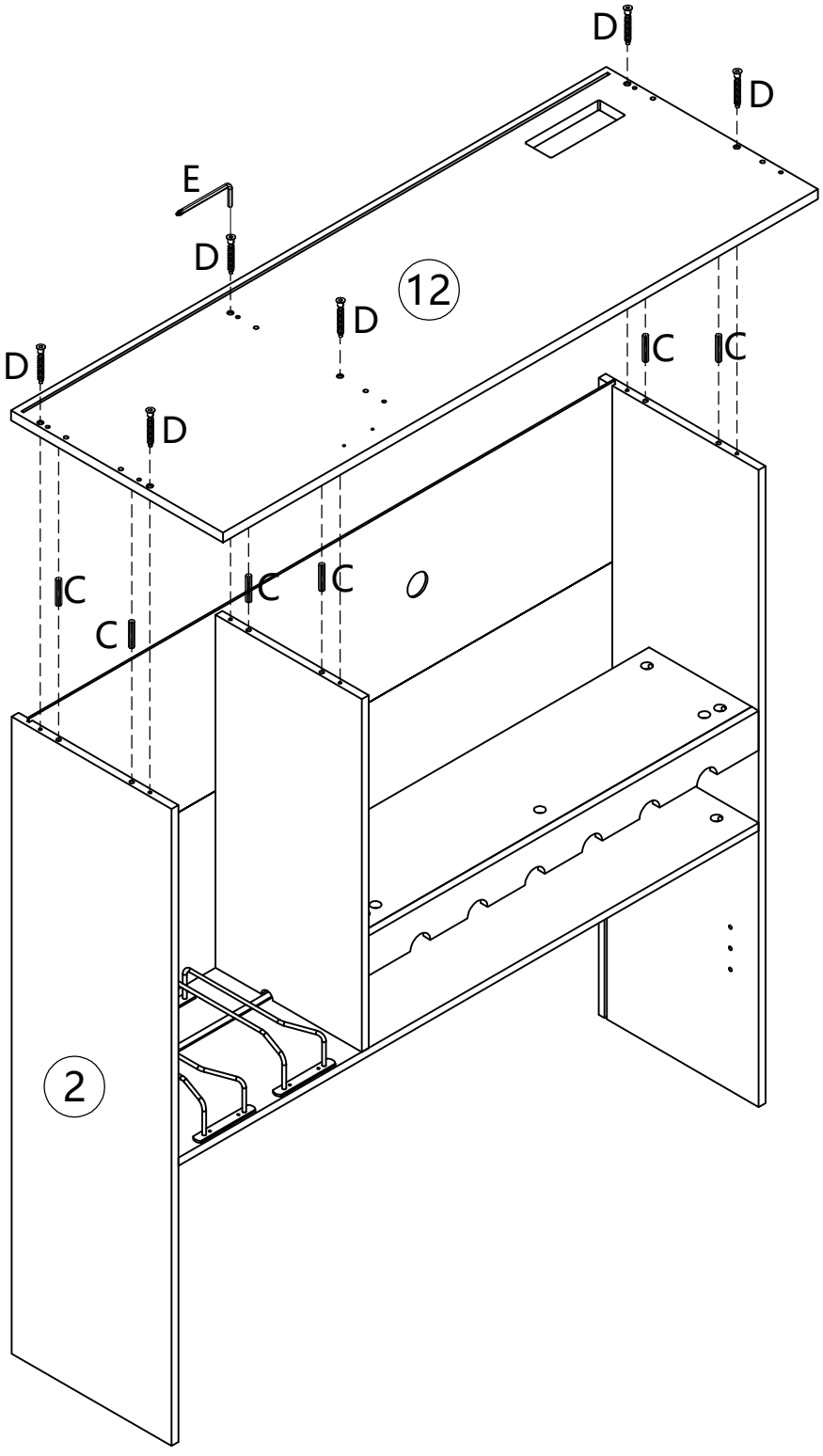

Step 12.

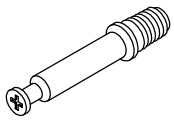

A x4

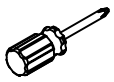

R x1

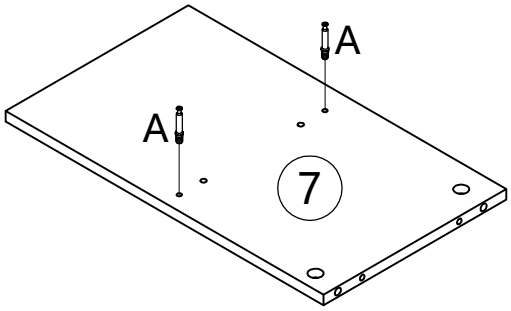

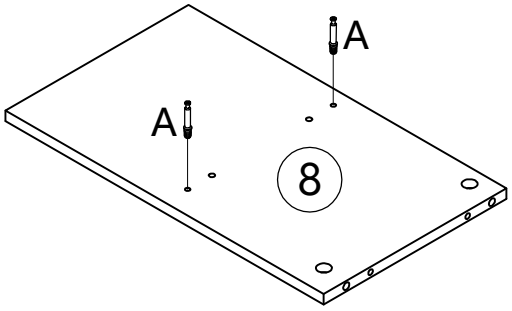

Step 13.



B x4

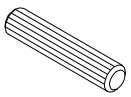

C x4

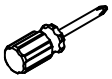

R x1

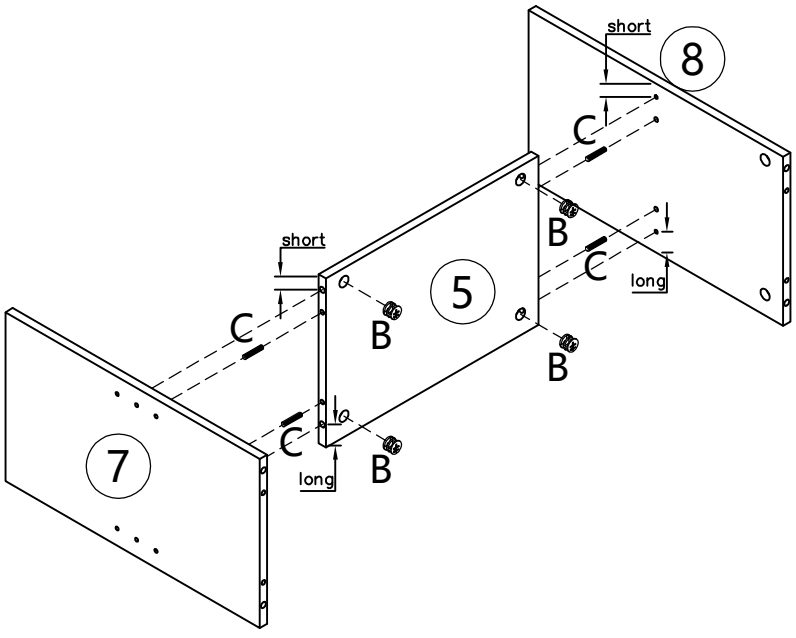

Step 14.

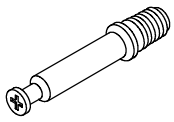

A x4

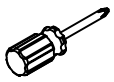

R x1

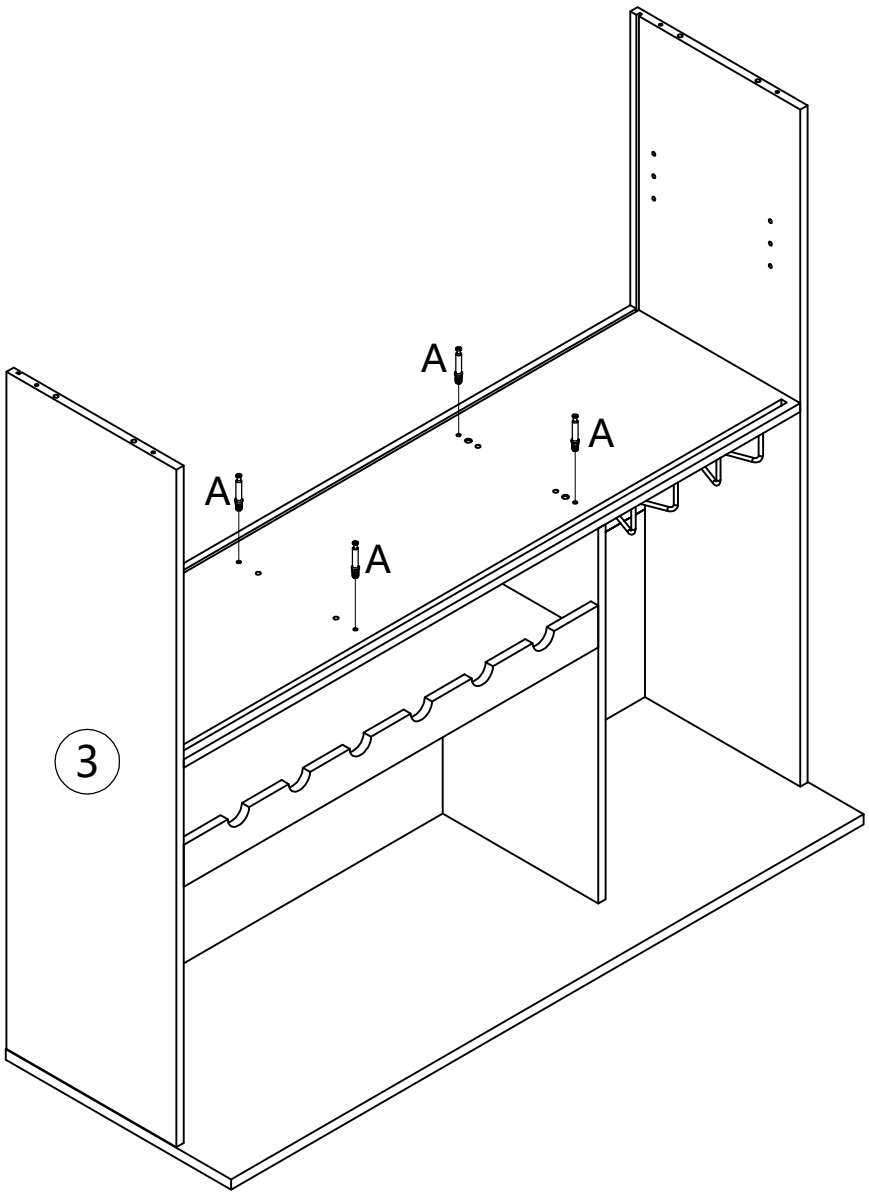

Step 15.



B x4

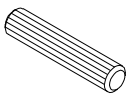

C x4

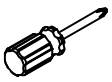

R x1



O x4

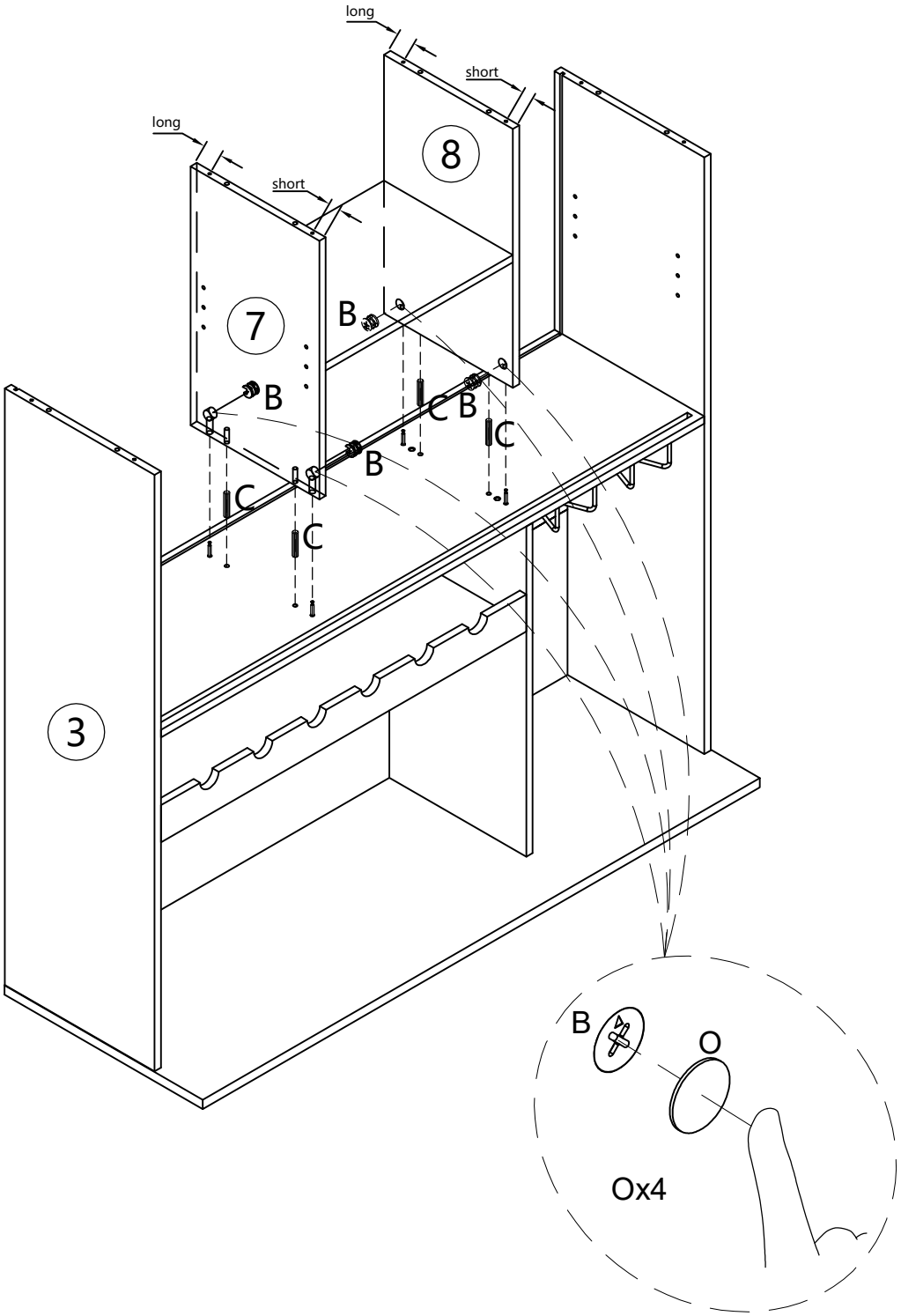

Step 16.

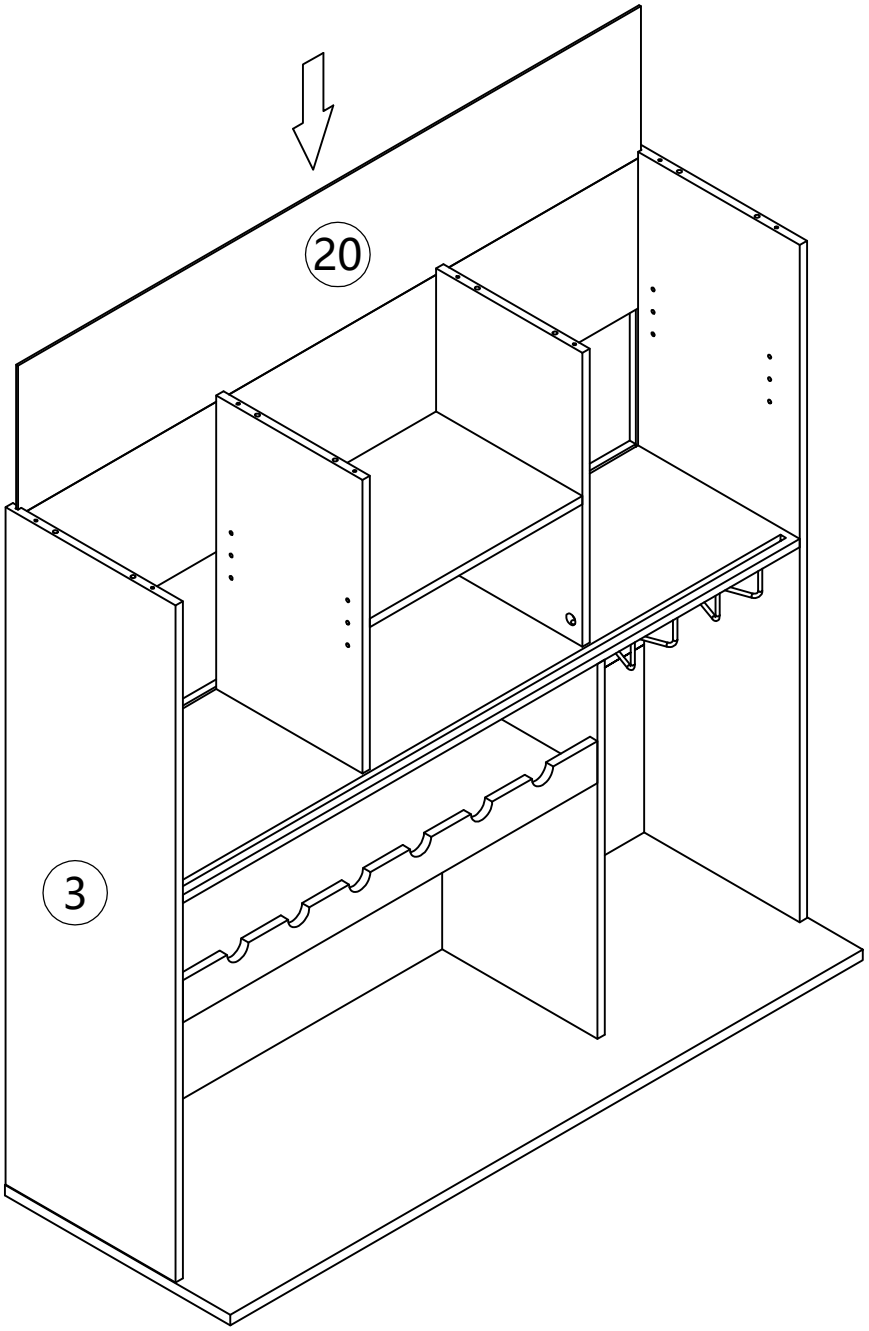

Step 17.

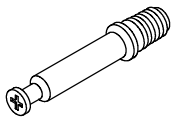

A x2

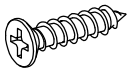

M x32

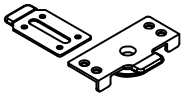

W x4

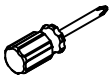

R x1

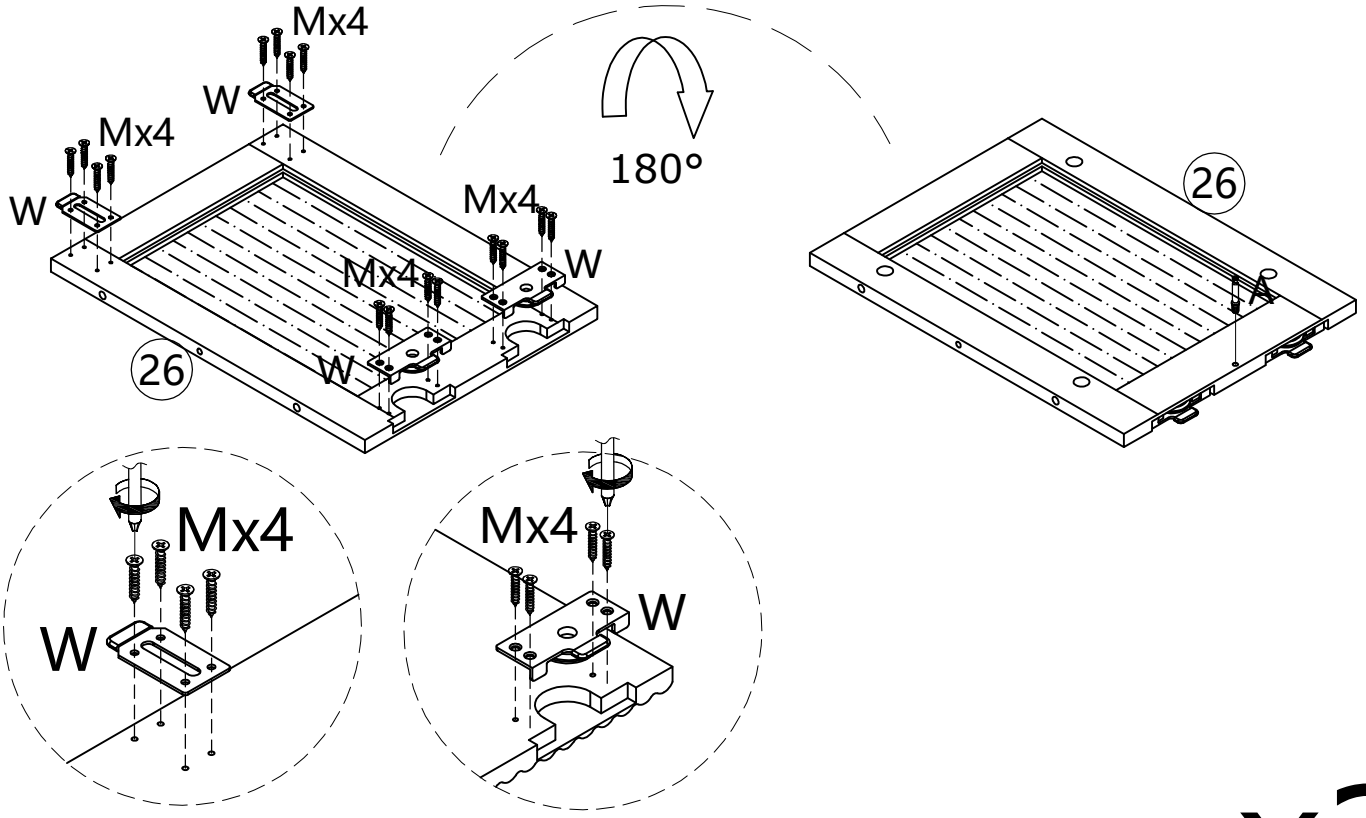

x2

Step 18.

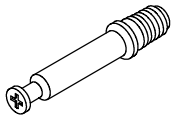

A x4

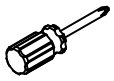

R x1

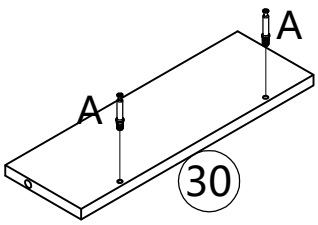

x2

Step 19.



B x4

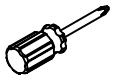

R x1

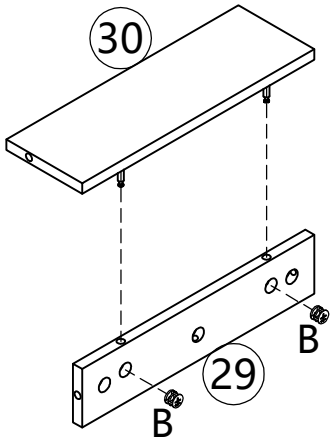

x2

Step 20.



B x2

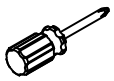

R x1

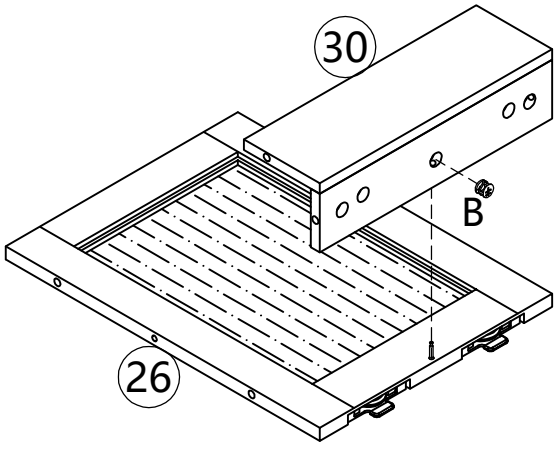

x2

Step 21.

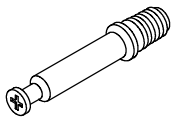

A x16

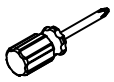

R x1

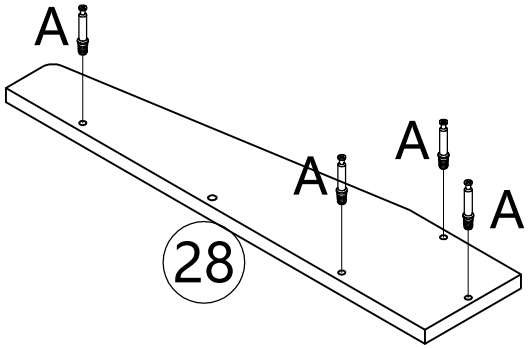

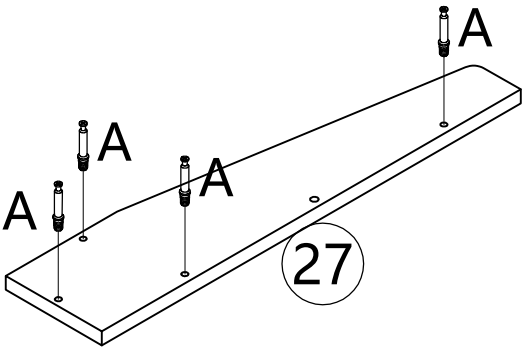

x2

Step 22.



B x16

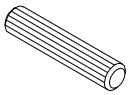

C x4

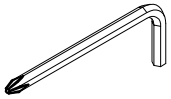

E x1

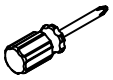

R x1

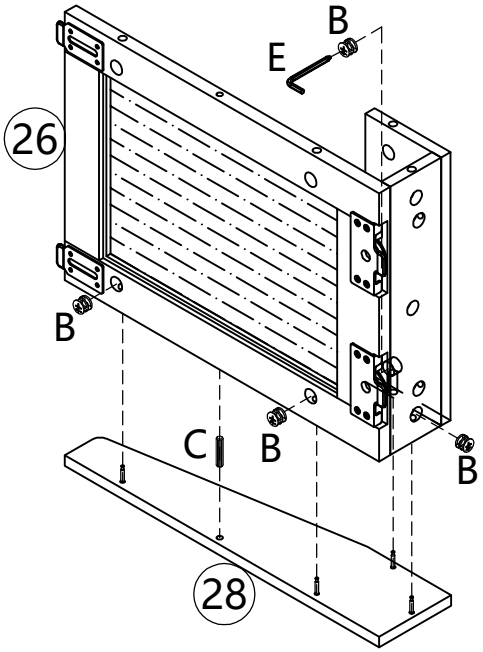

x2

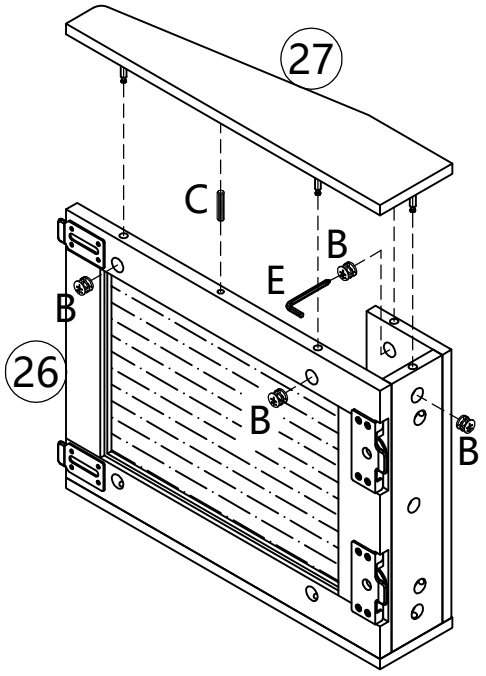

x2

Step 23.

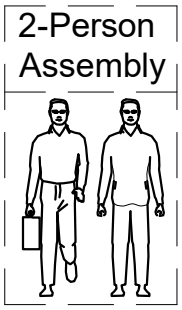

Please note that this step requires two - person cooperation for installation.

This step and the next step need to be installed in coordination.

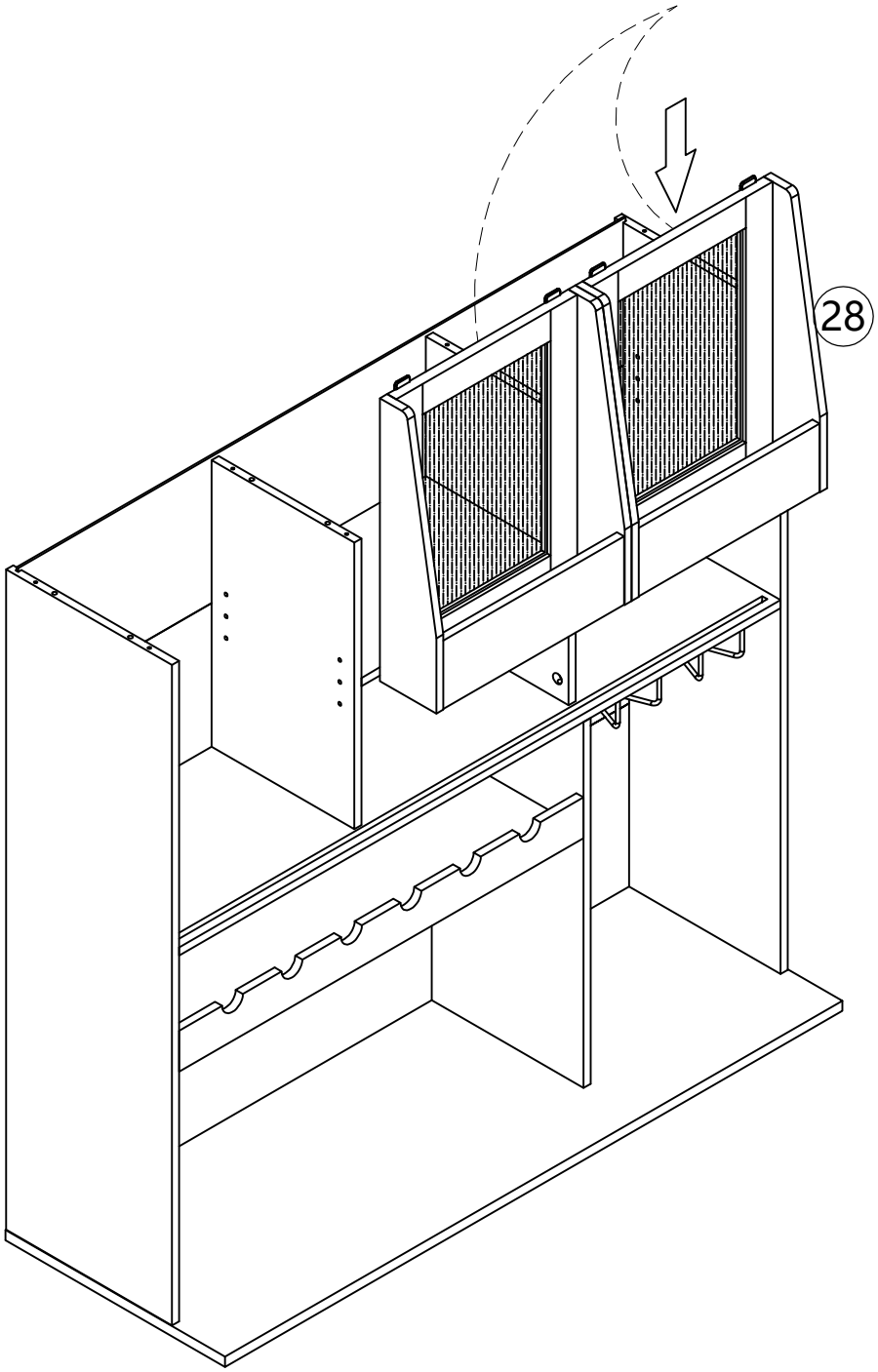

Step 24.

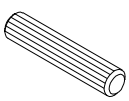

C x8

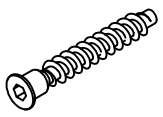

D x8

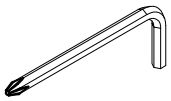

E x1

2-Person Assembly

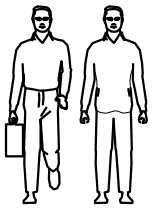

Please note that this step requires two - person cooperation for installation.

Pay attention to the position of this hole.

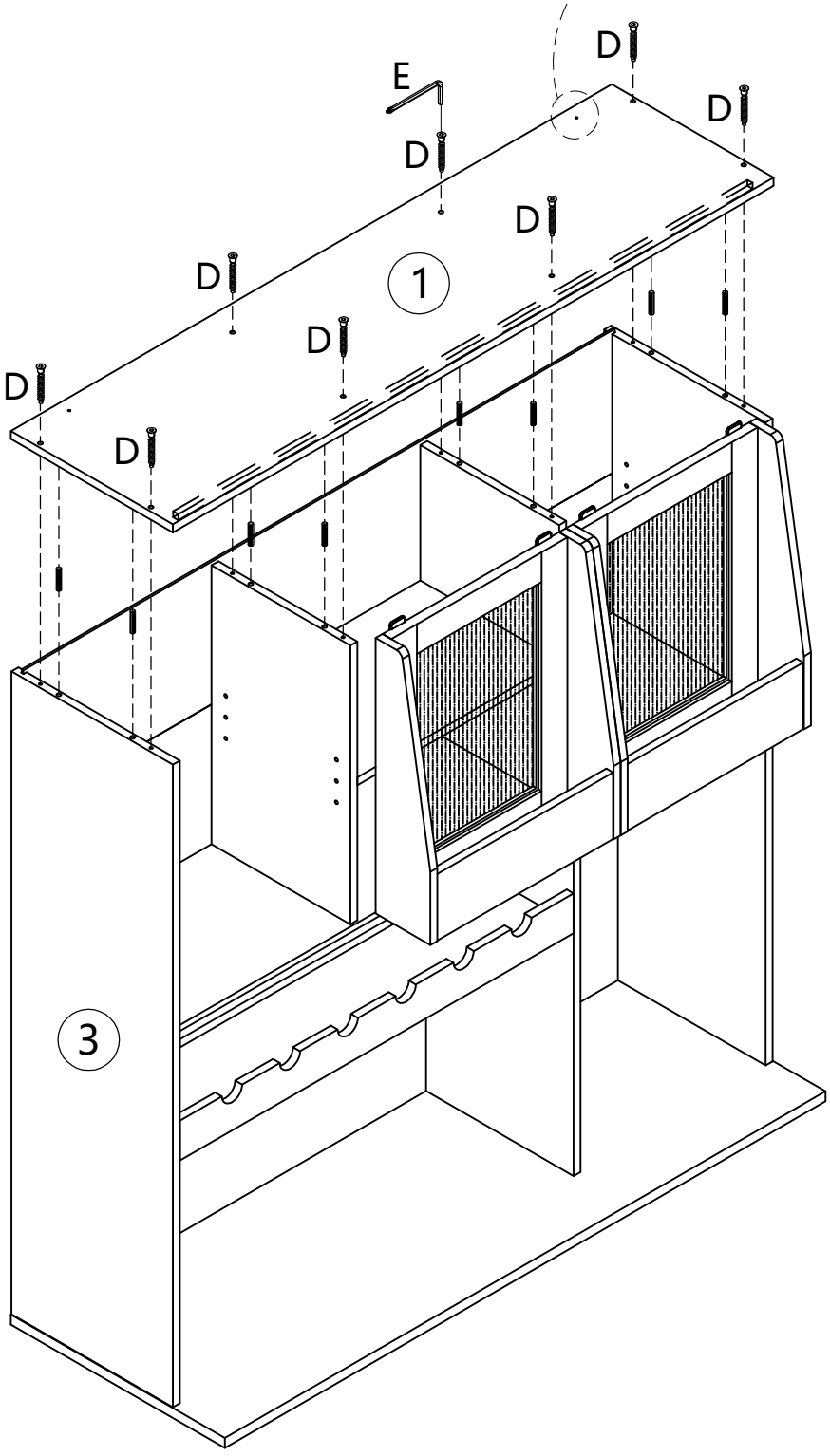

Step 25.

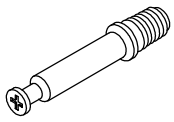

A x6

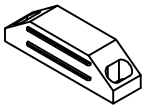

X x1

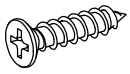

Y x2

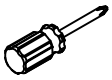

R x1

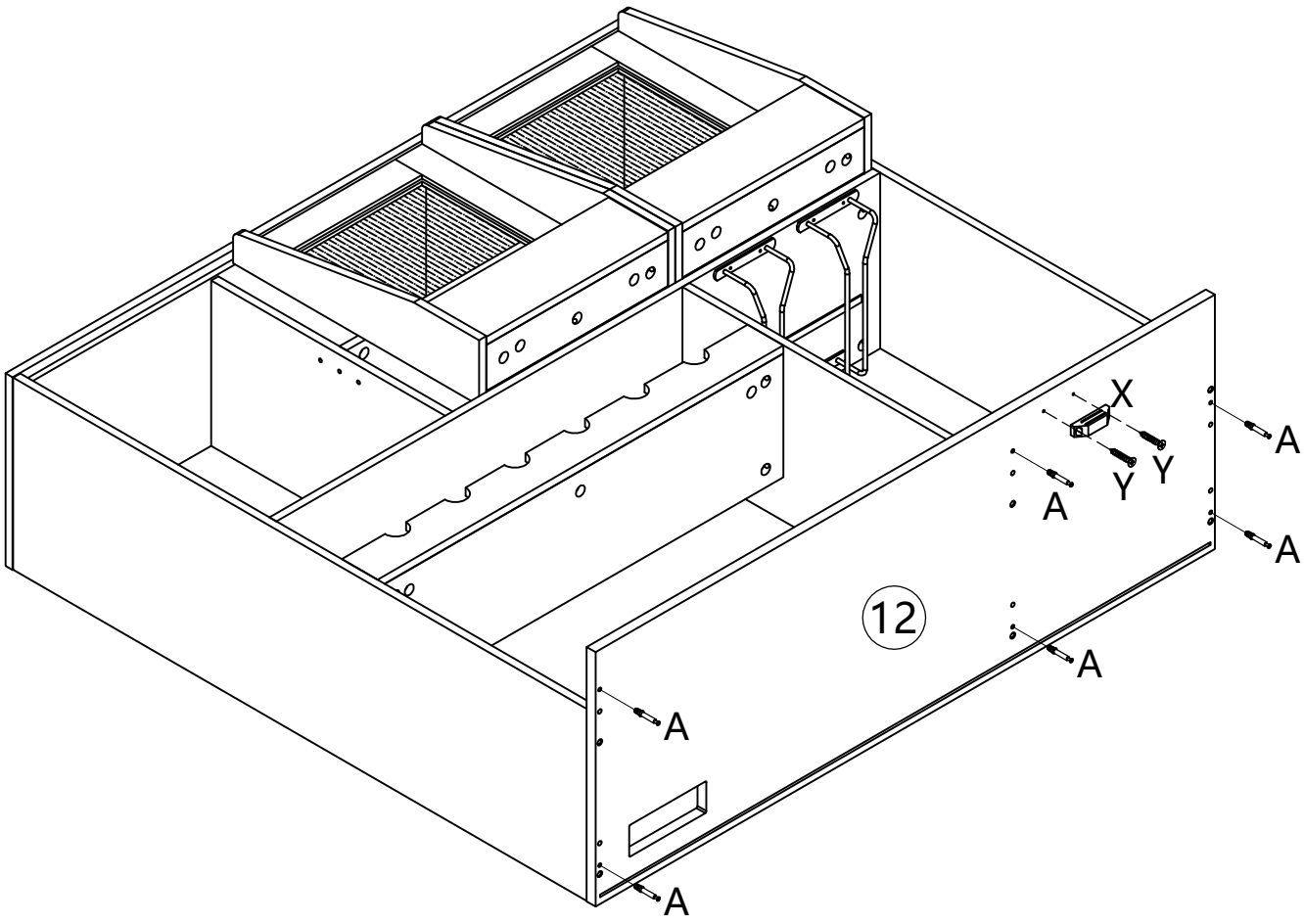

Step 26.

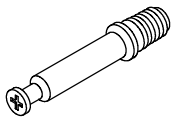

A x4

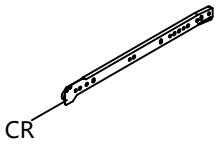

N x1

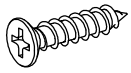

M x3

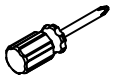

R x1

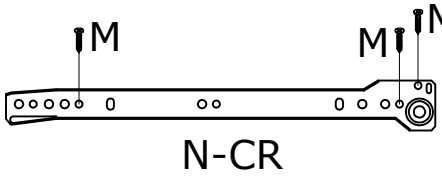

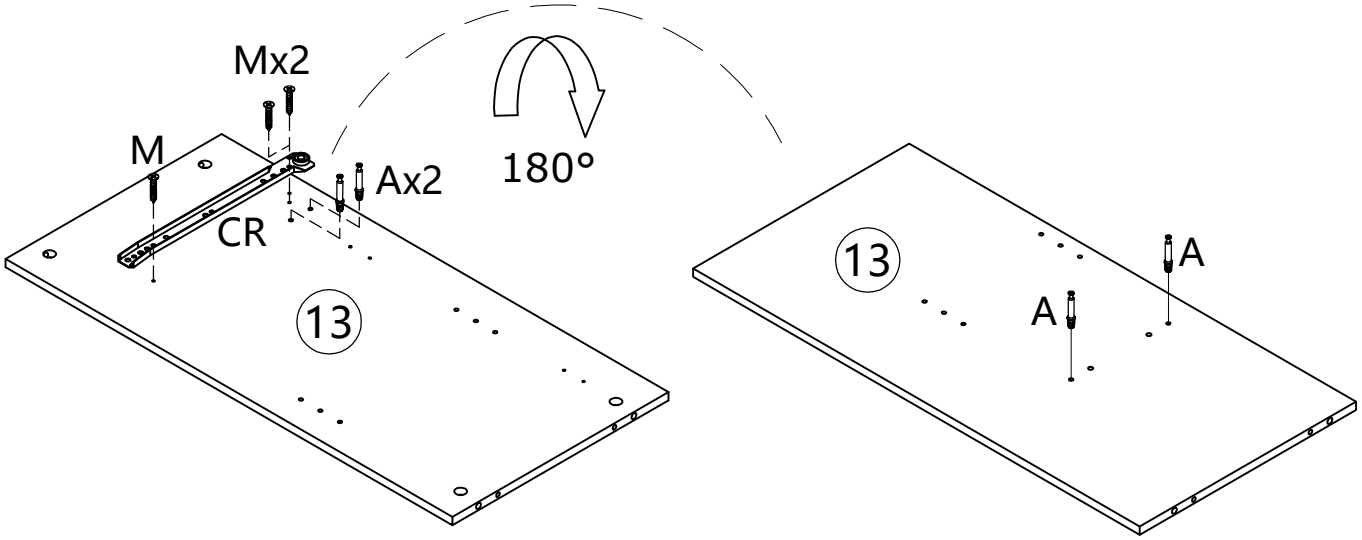

Step 27.

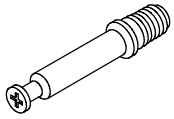

A x2

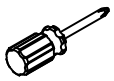

R x1

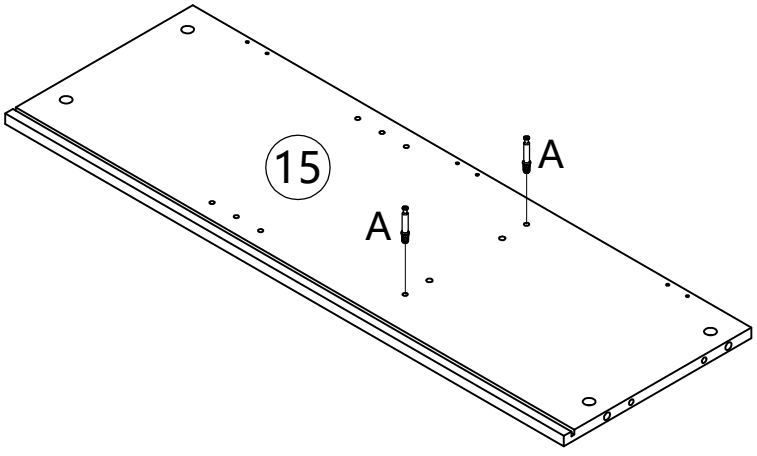

Step 28.



B x4

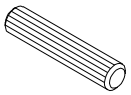

C x4

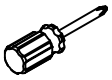

R x1

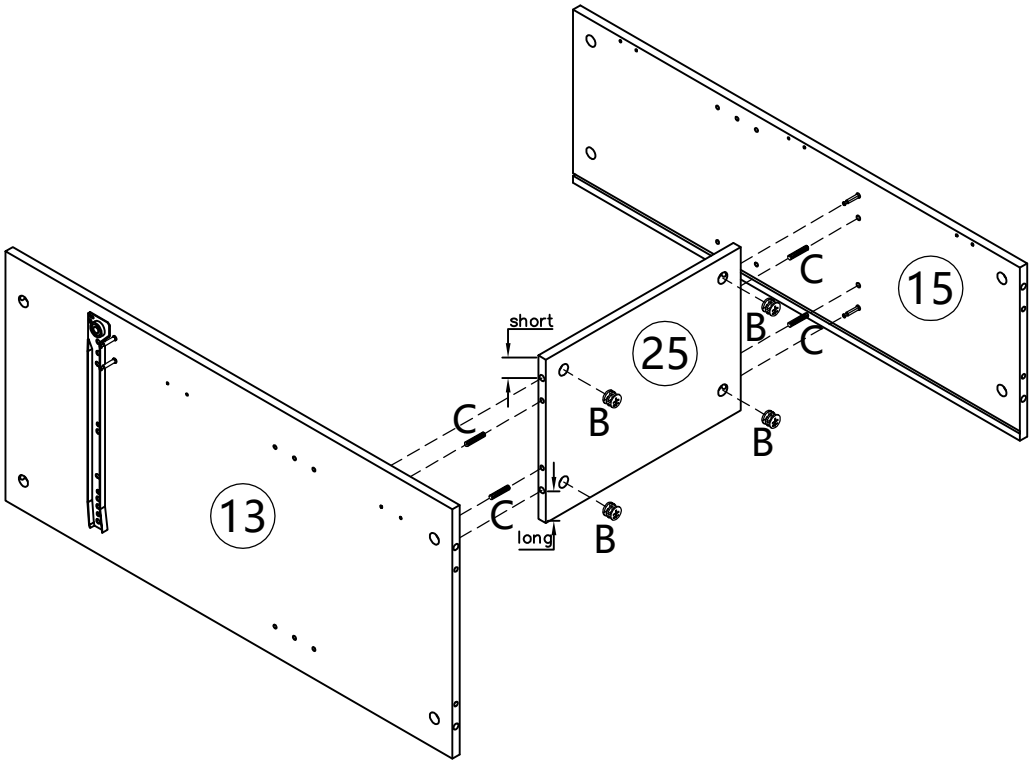

Step 29.

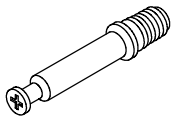

A x2

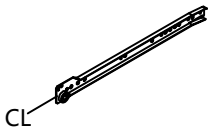

N x1

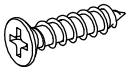

M x3

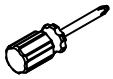

R x1

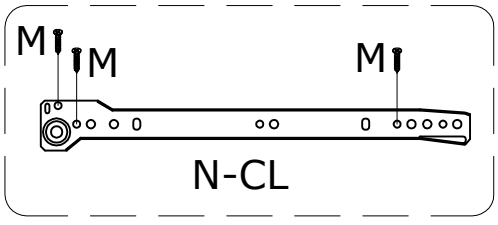

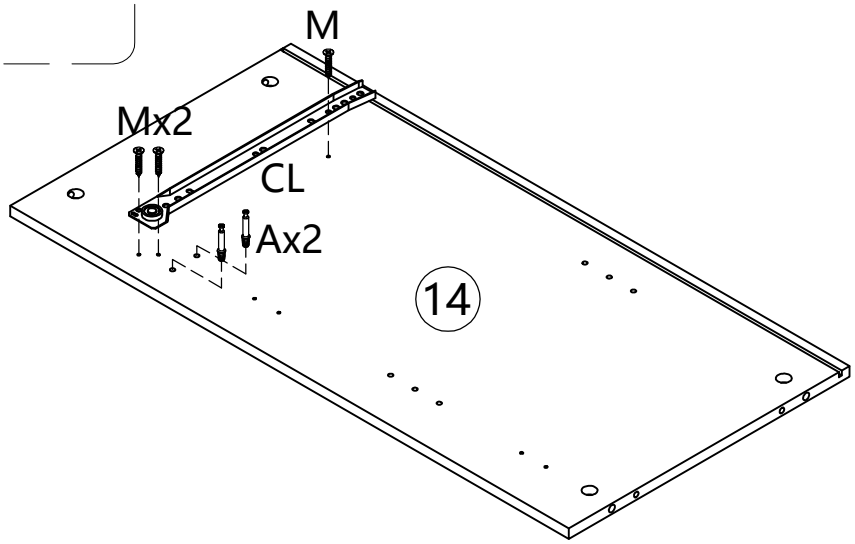

Step 30.



B x4

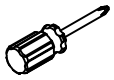

R x1

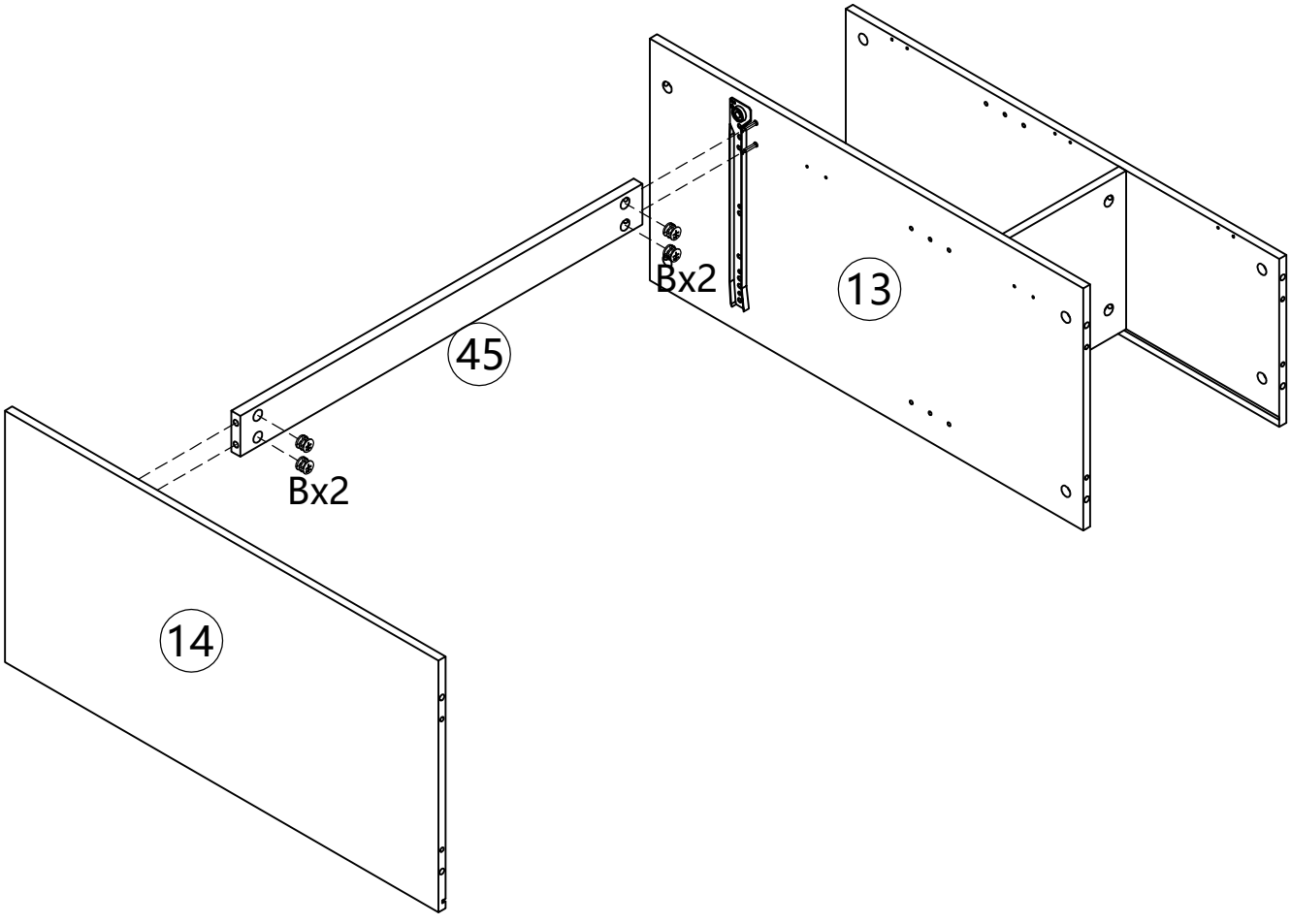

Step 31.

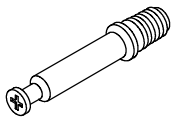

A x4

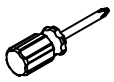

R x1

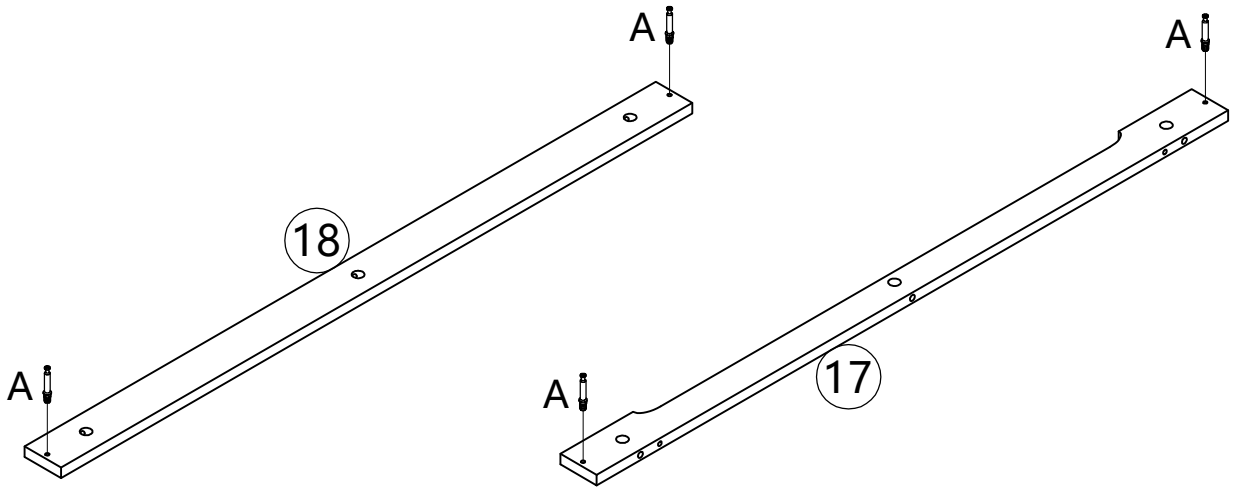

Step 32.



B x4

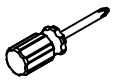

R x1

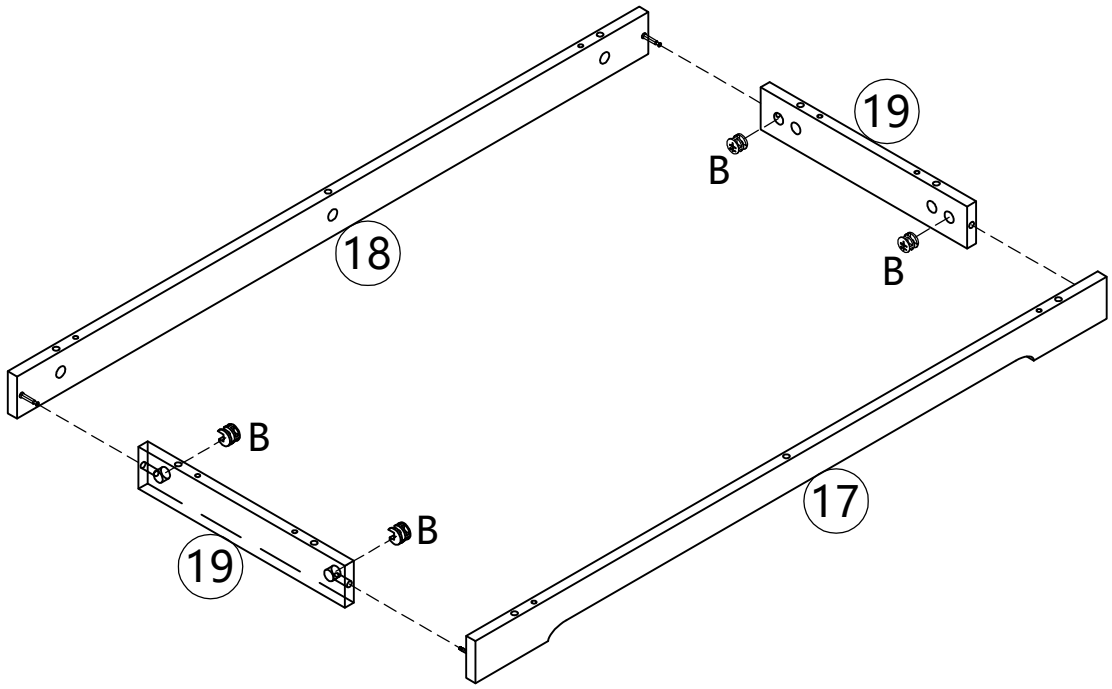

Step 33.

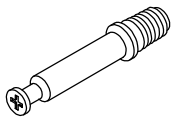

A x10

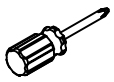

R x1

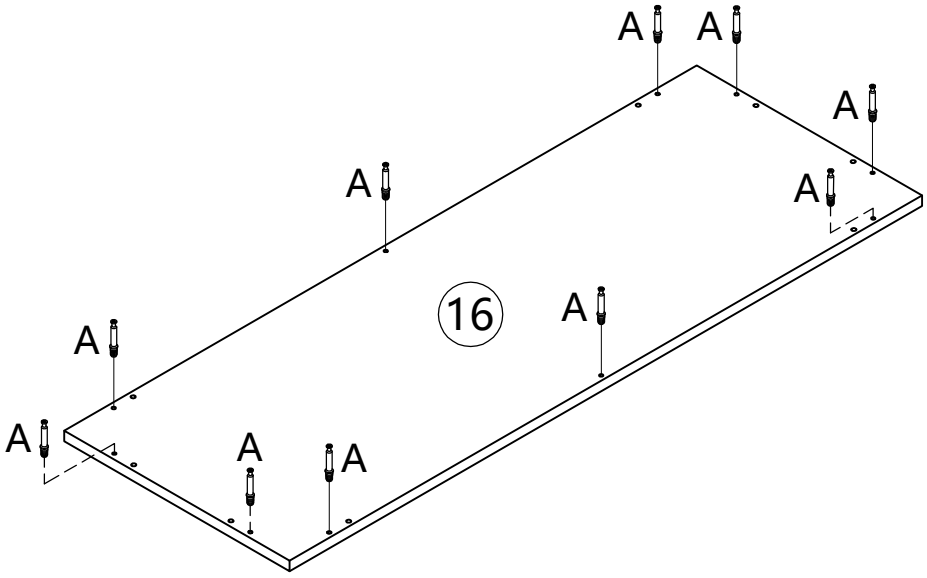

Step 34.



B x10

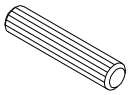

C x8

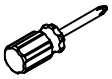

R x1

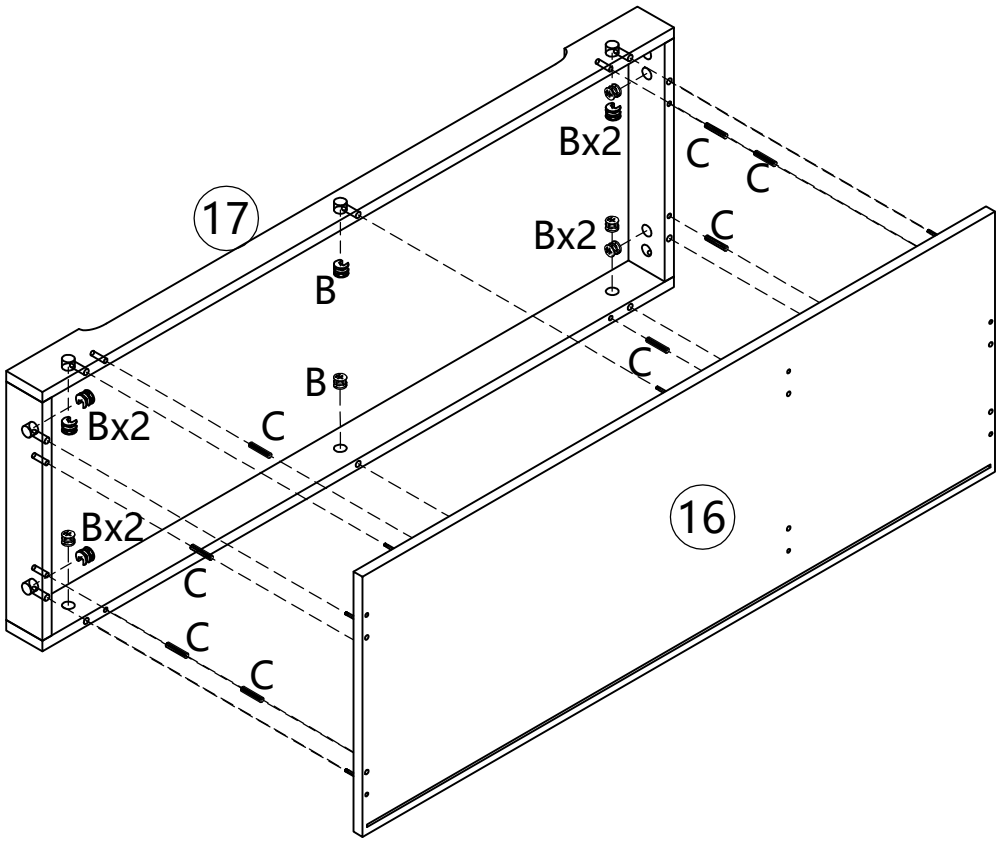

Step 35.

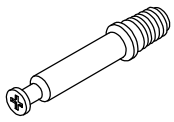
A x6


B x6

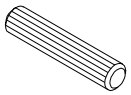
C x6

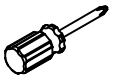
R x1


O x6

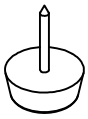
P x11

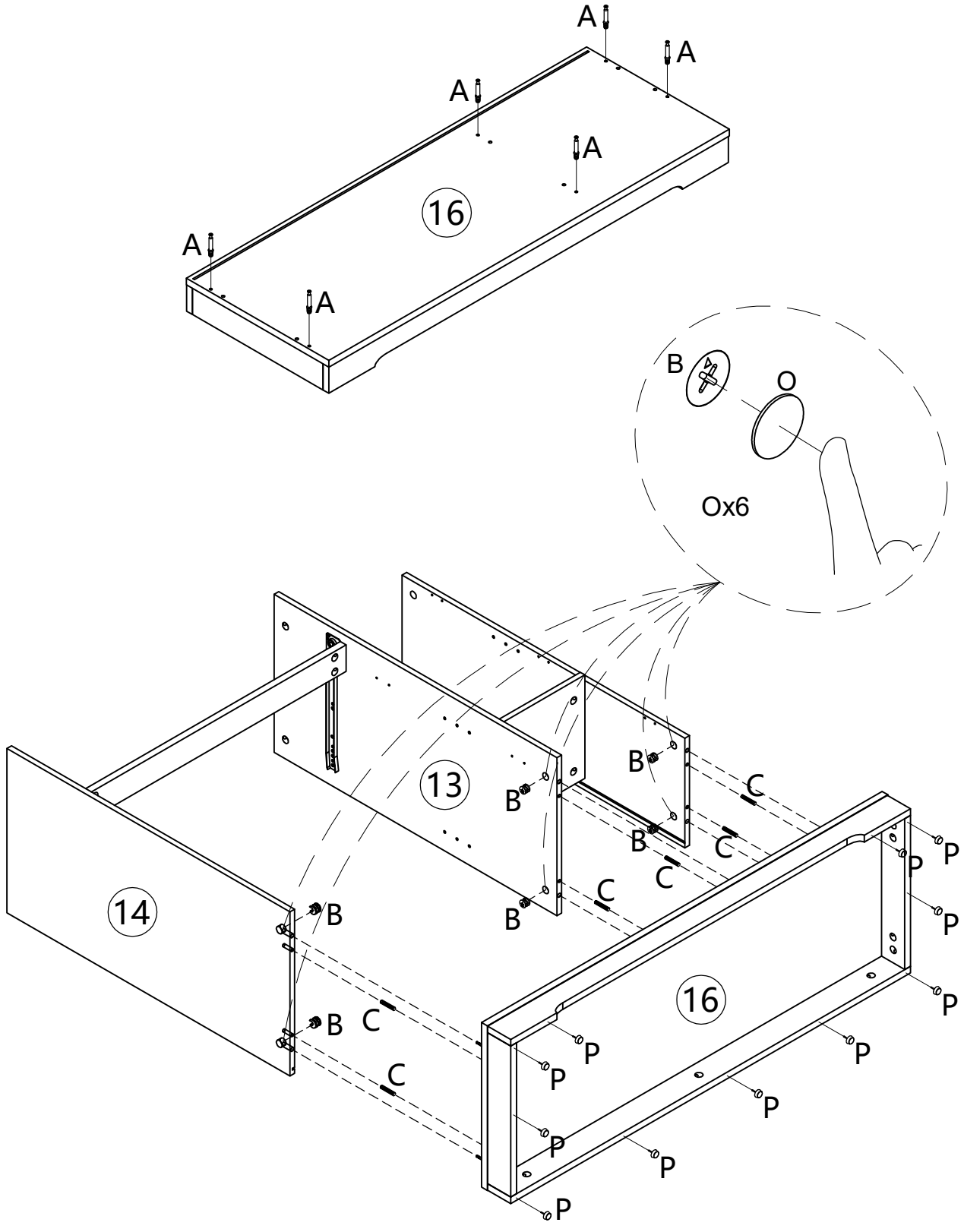

Step 36.

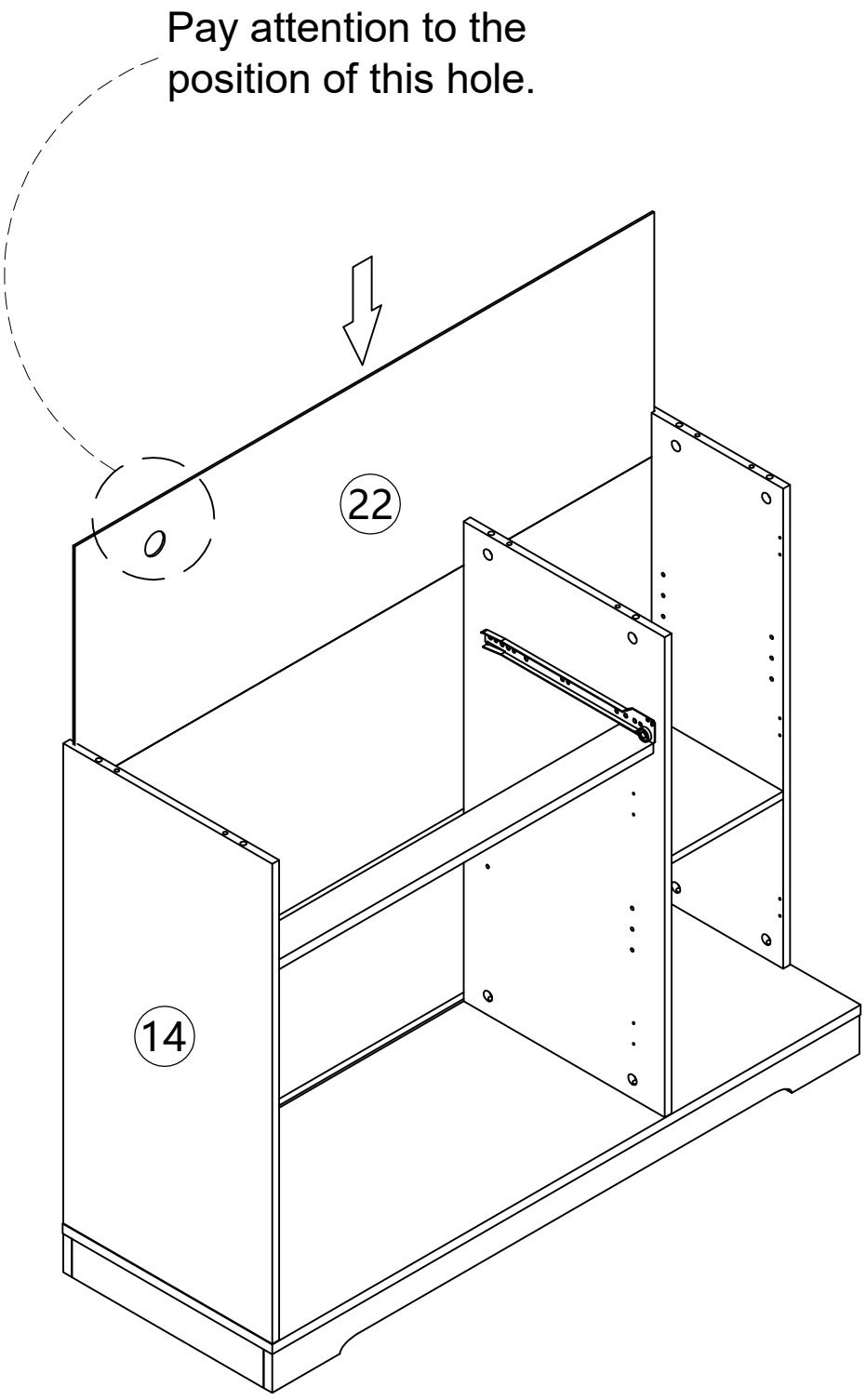

Step 37.


B x6

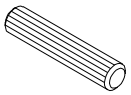
C x6

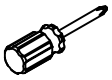
R x1


O x2

2-Person Assembly

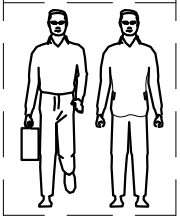

Please note that this step requires two - person cooperation for installation.

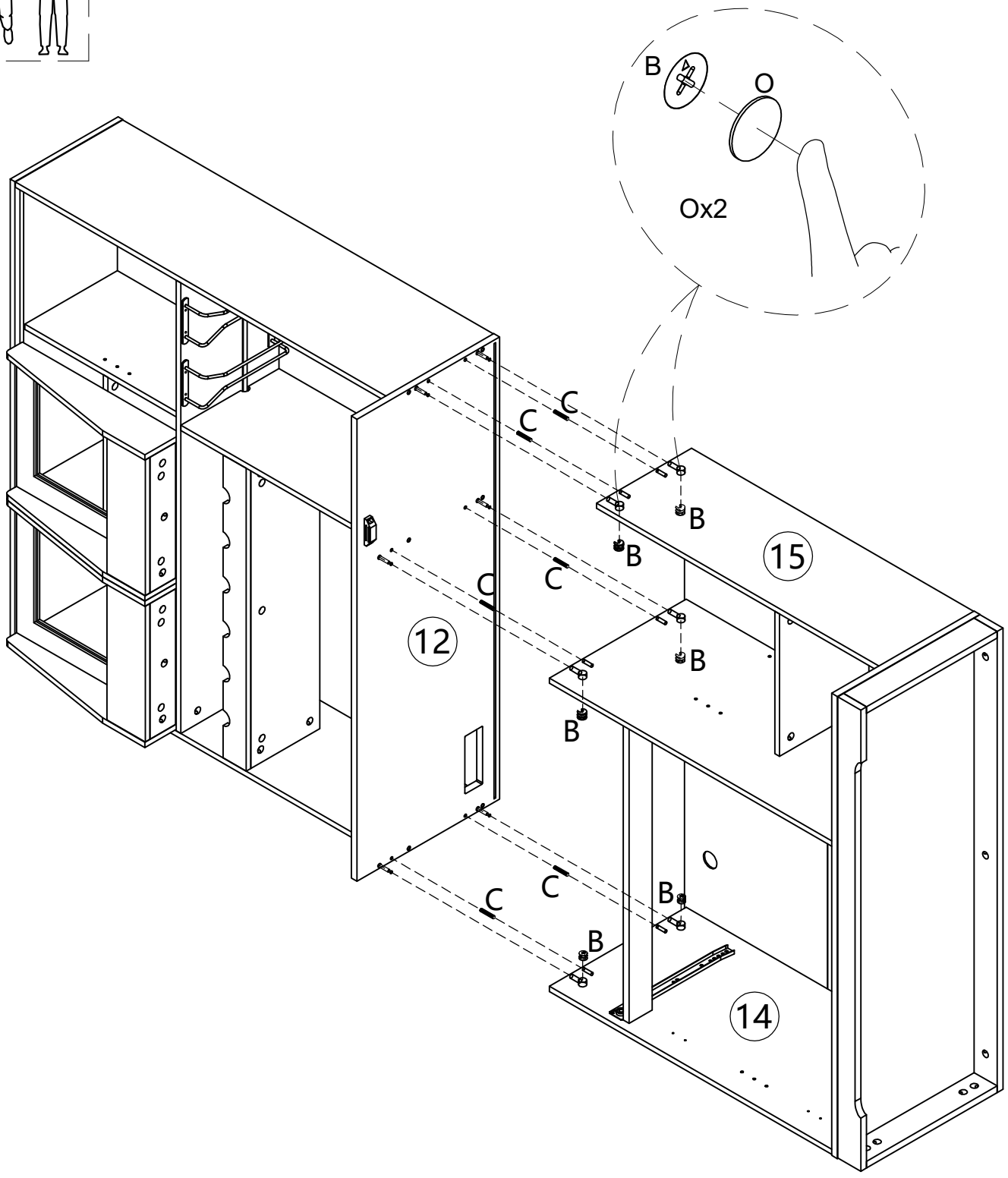

Step 38.

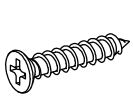

M x2



Z x1

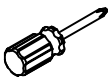

R x1

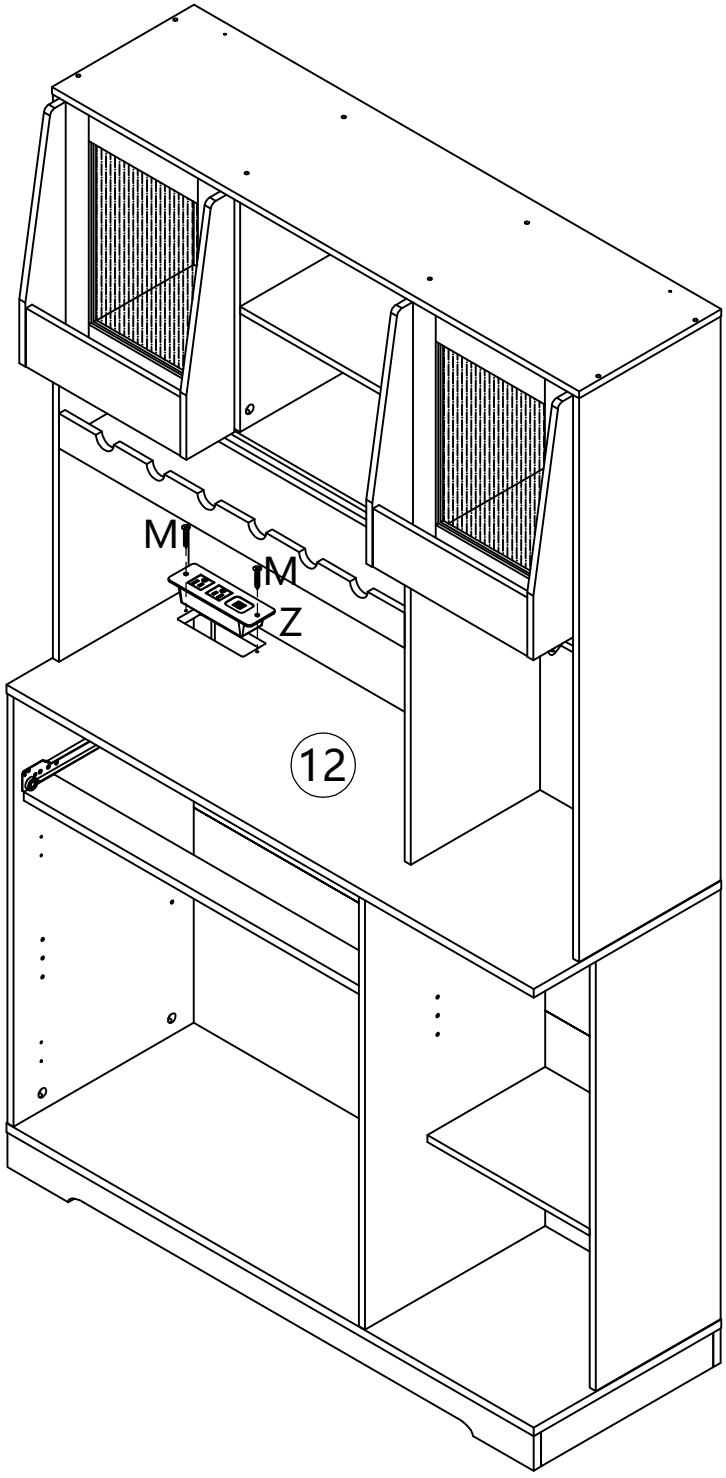

Step 39.

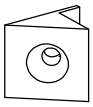
K x19

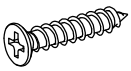
L x19

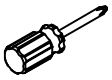
R x1

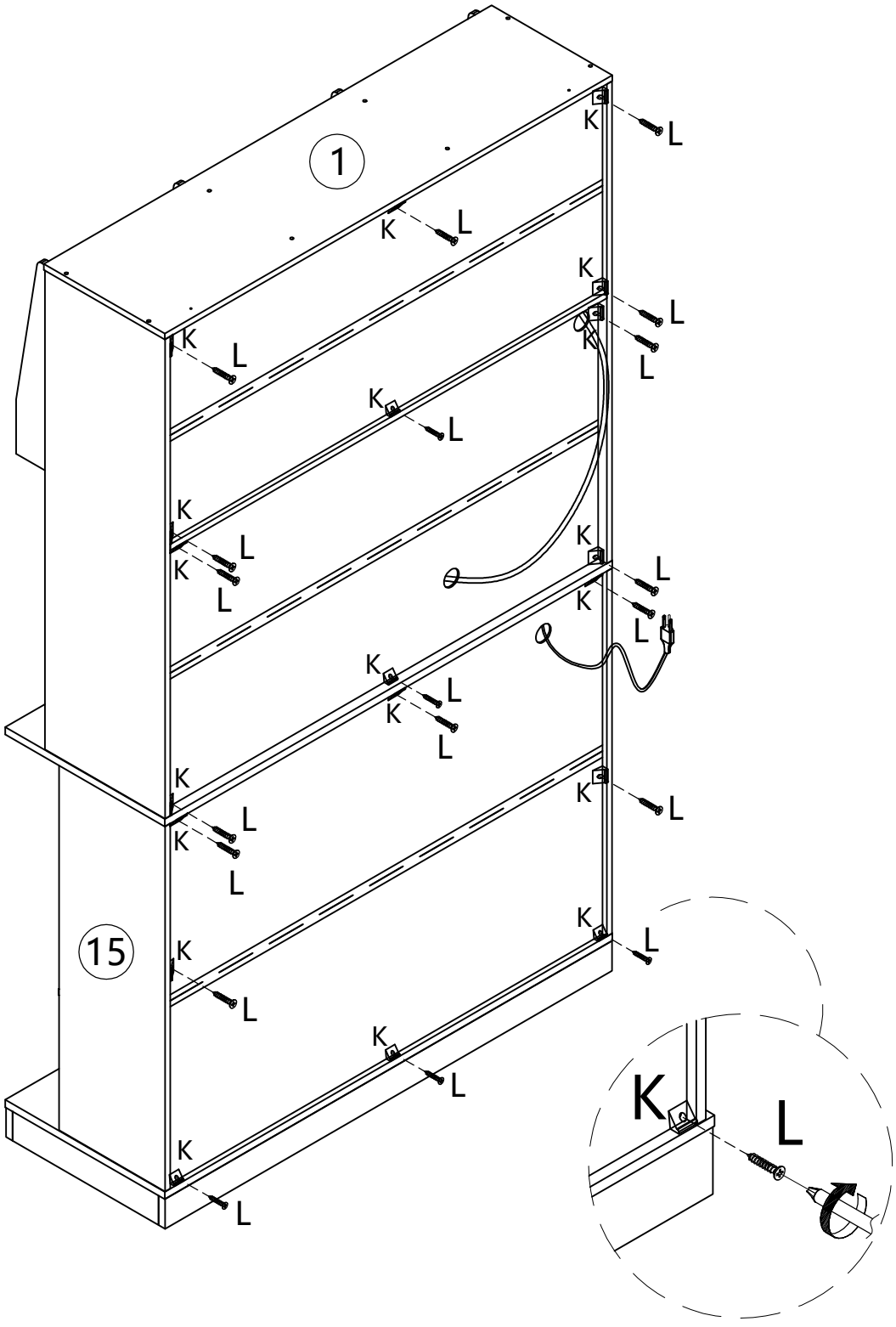

Step 40.

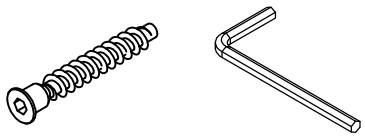

D x4 E x1

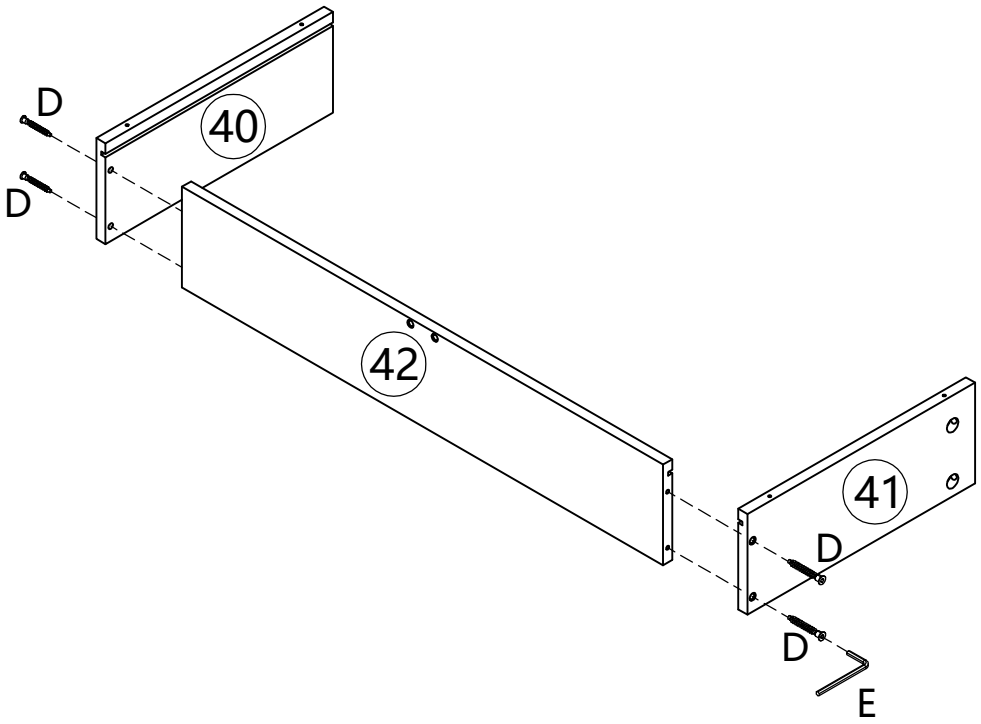

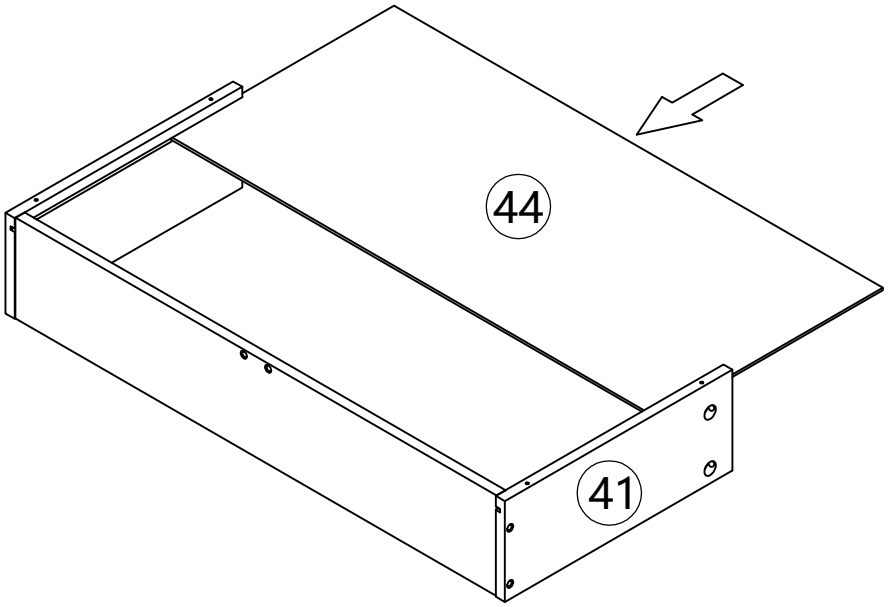

Step 41.

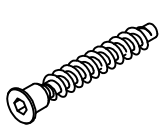

D x2

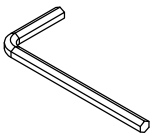

E x1

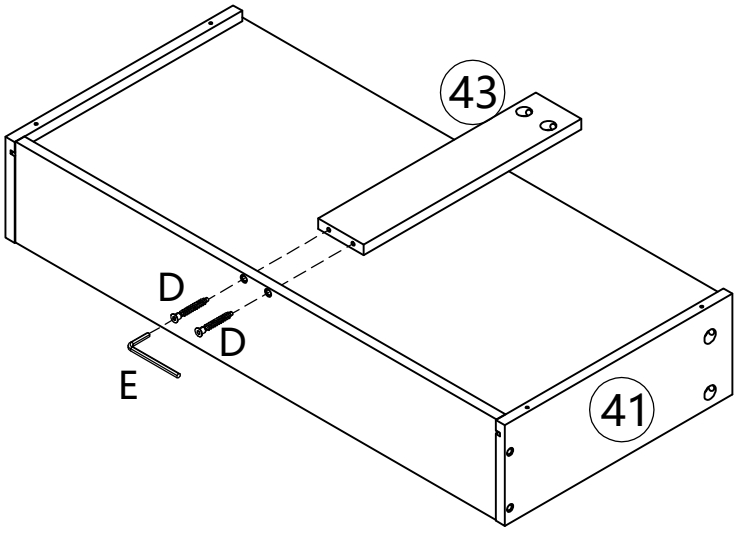

Step 42.

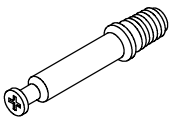

A x6



F x1



H x1

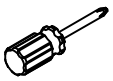

R x1

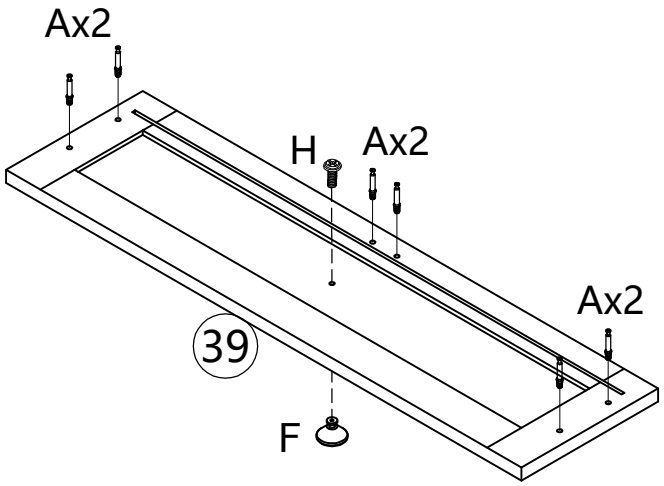

Step 43.



B x6



O x4

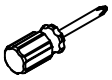

R x1

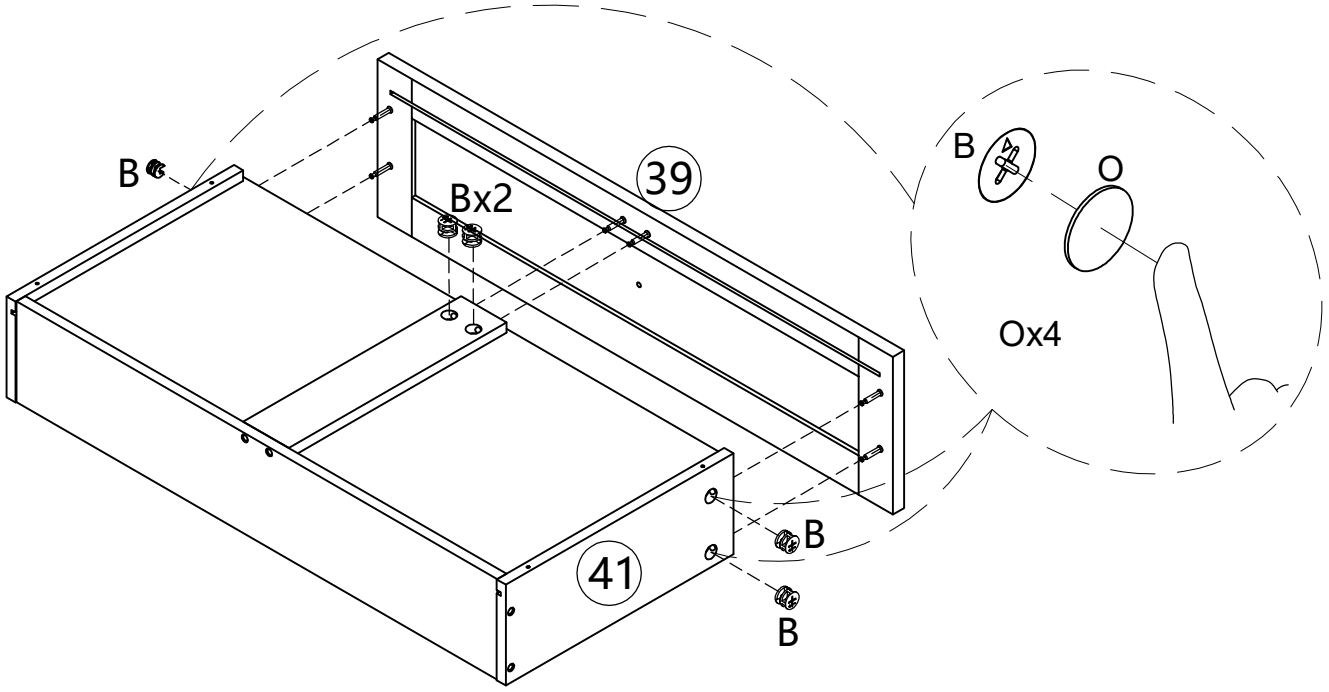

Step 44.

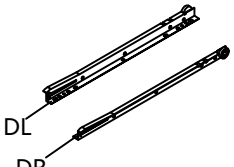

N x1

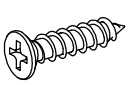

M x4

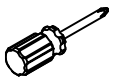

R x1

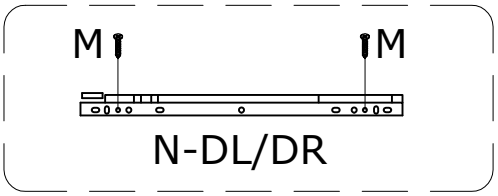

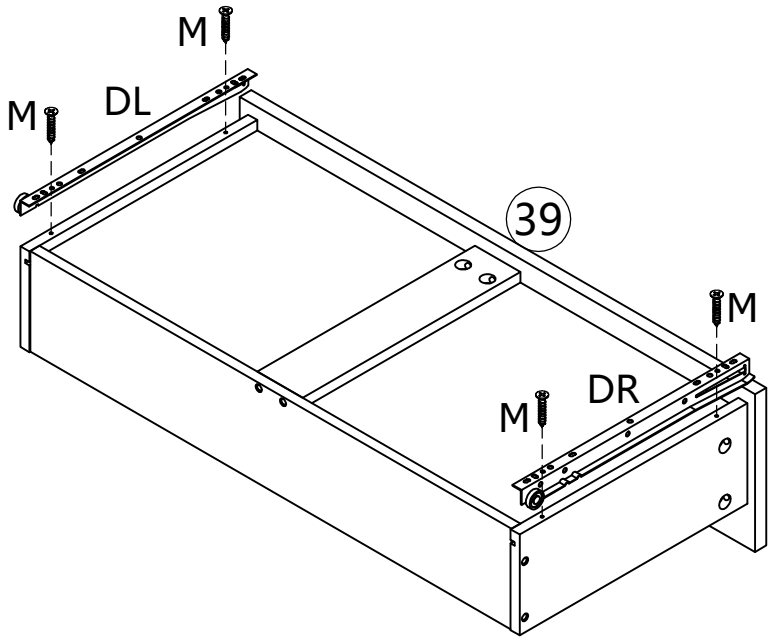

Step 45.

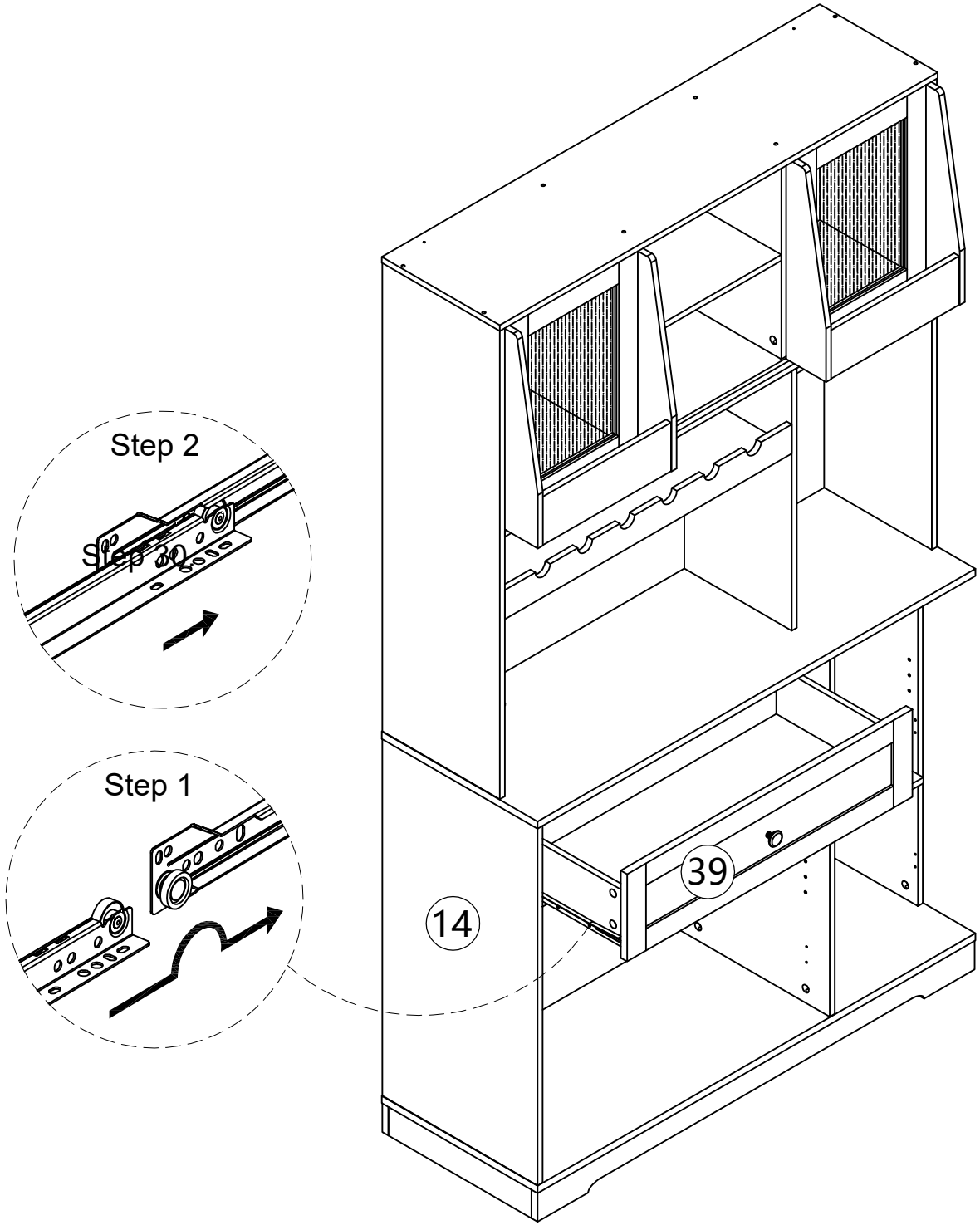

Step 46.

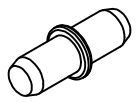

I x4

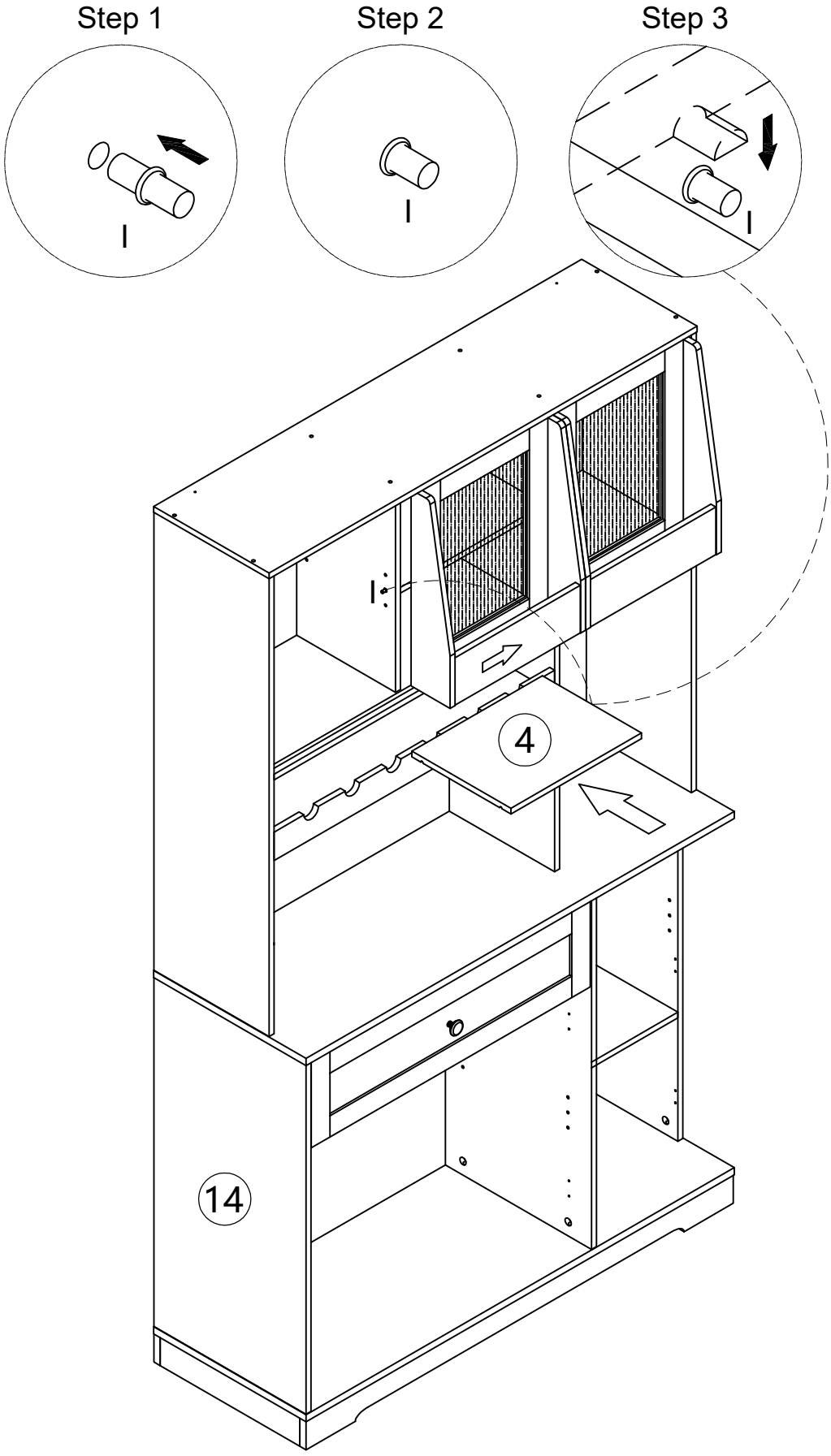

Step 47.

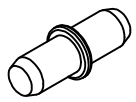

I x8

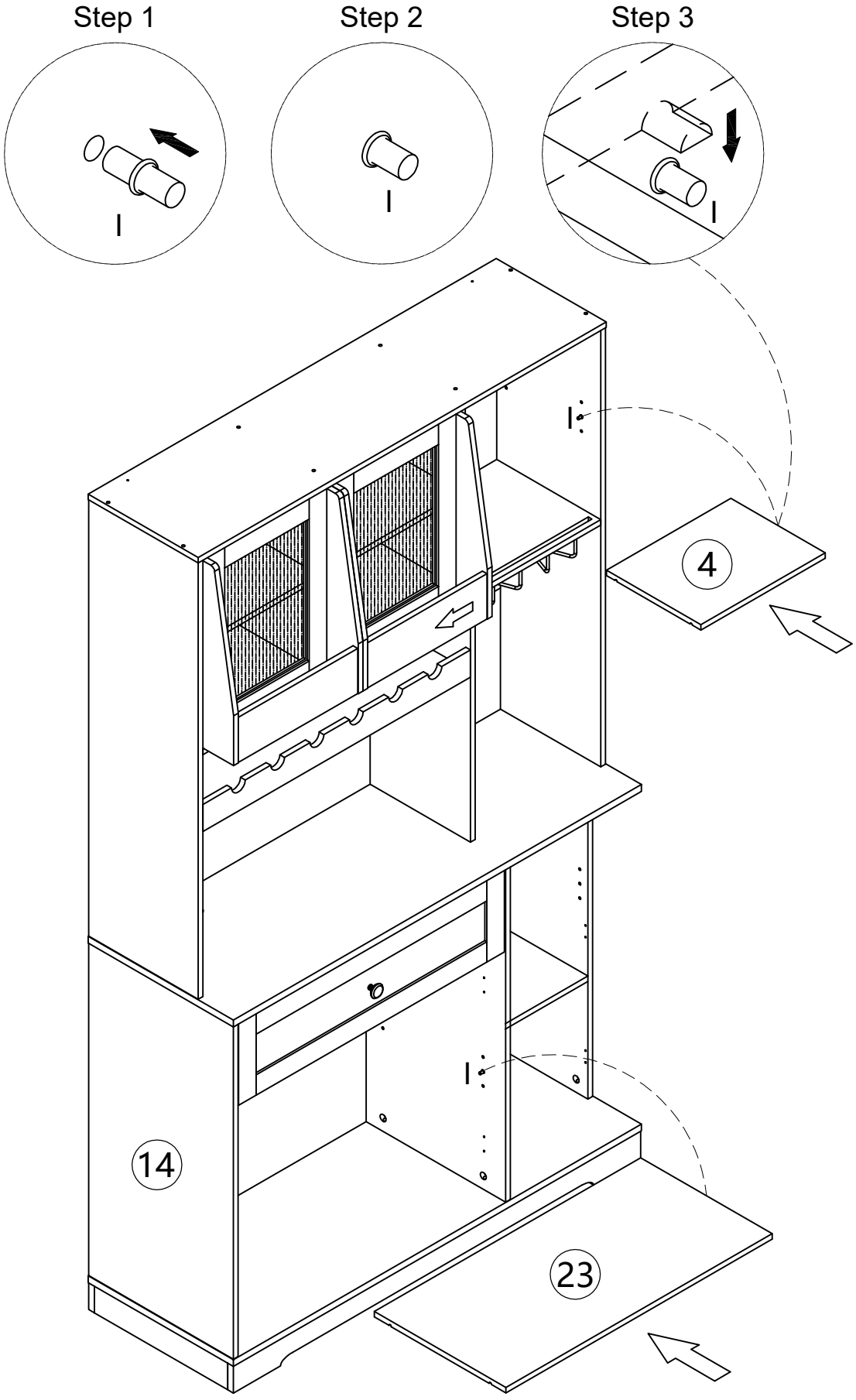

Step 48.

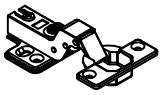

J x4

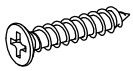

M x8

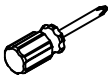

R x1

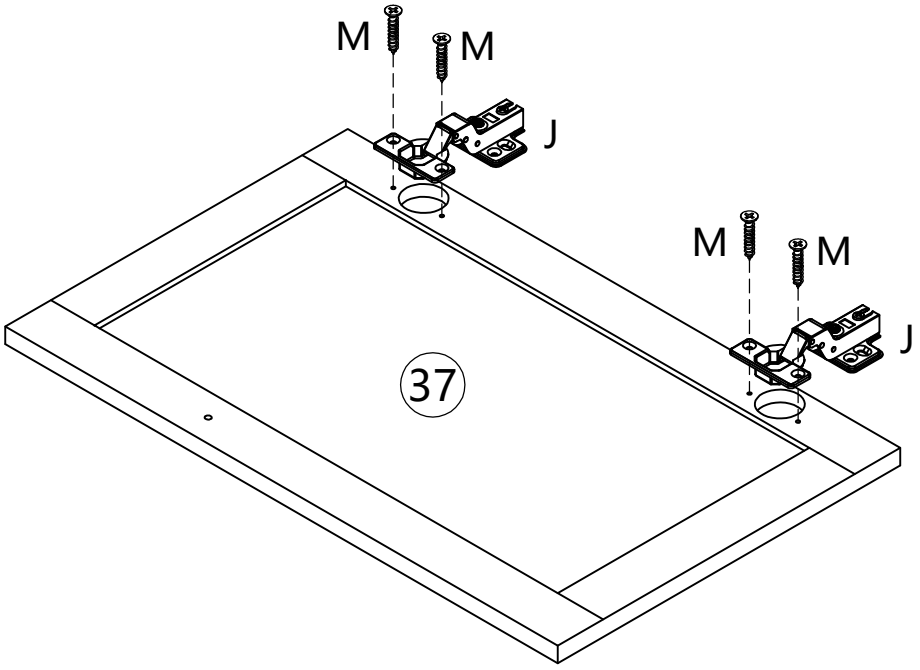

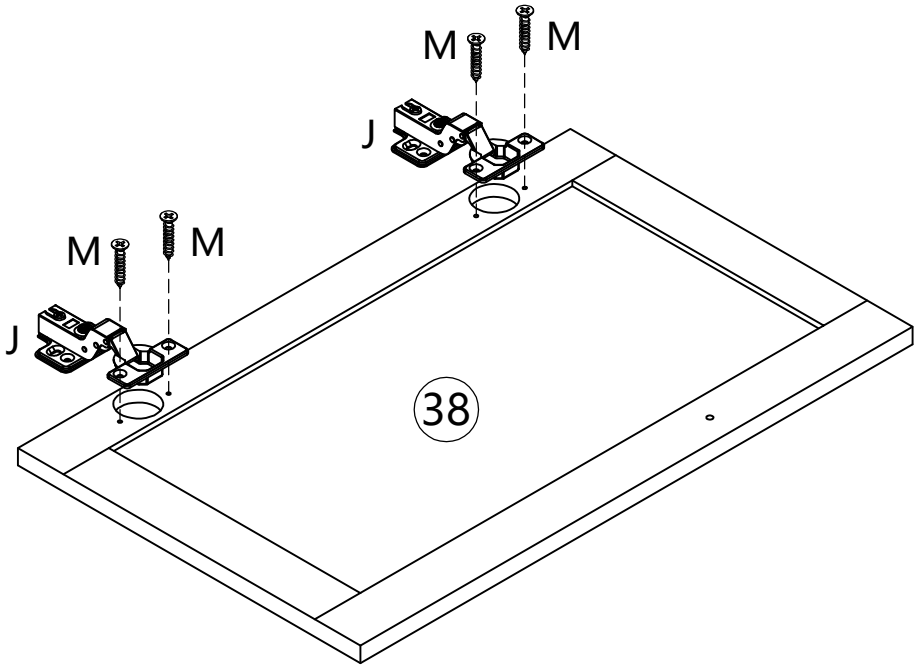

Step 49.



F x1 G x1 M x8 R x1

Note: First, tighten the two screws on the inside, adjust the gap between the top and bottom of the door panel, and finally tighten the front screws.

Step 1

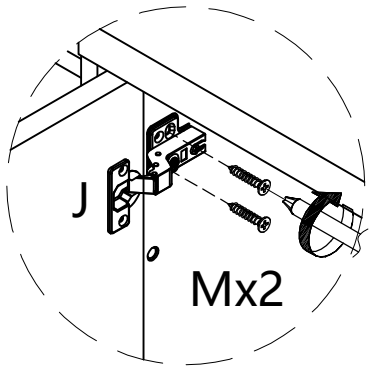

Step 2

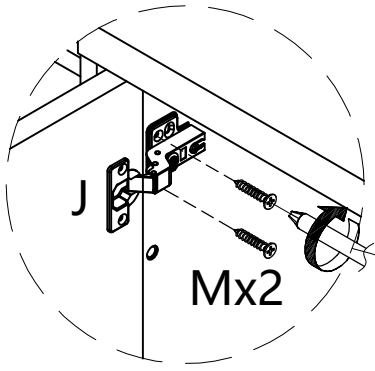

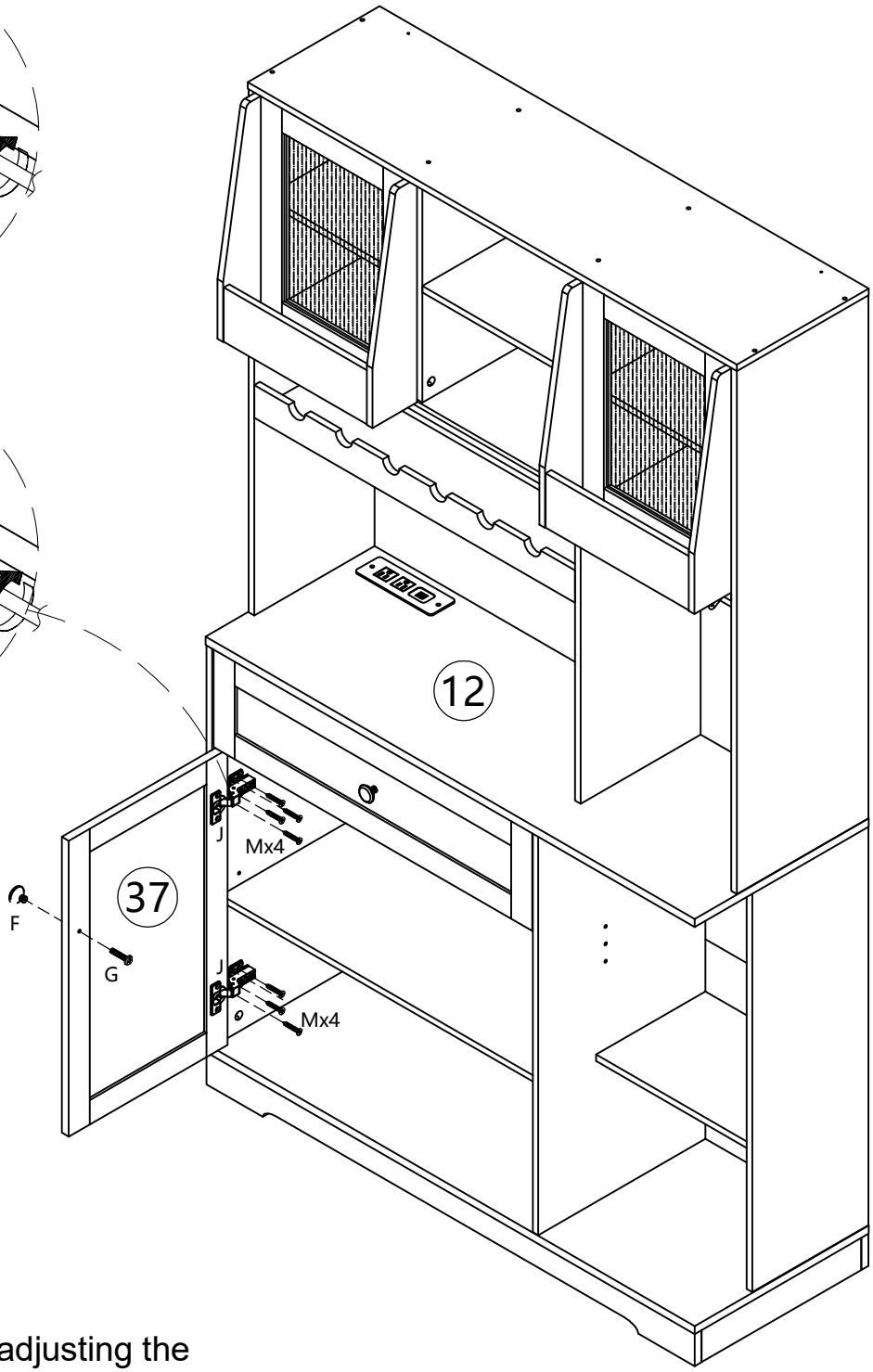

Note: The method for adjusting the door panel is on the last page.

Step 50.


F x1

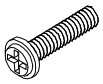
G x1

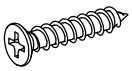
M x8

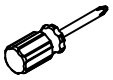
R x1

Note: First, tighten the two screws on the inside, adjust the gap between the top and bottom of the door panel, and finally tighten the front screws.

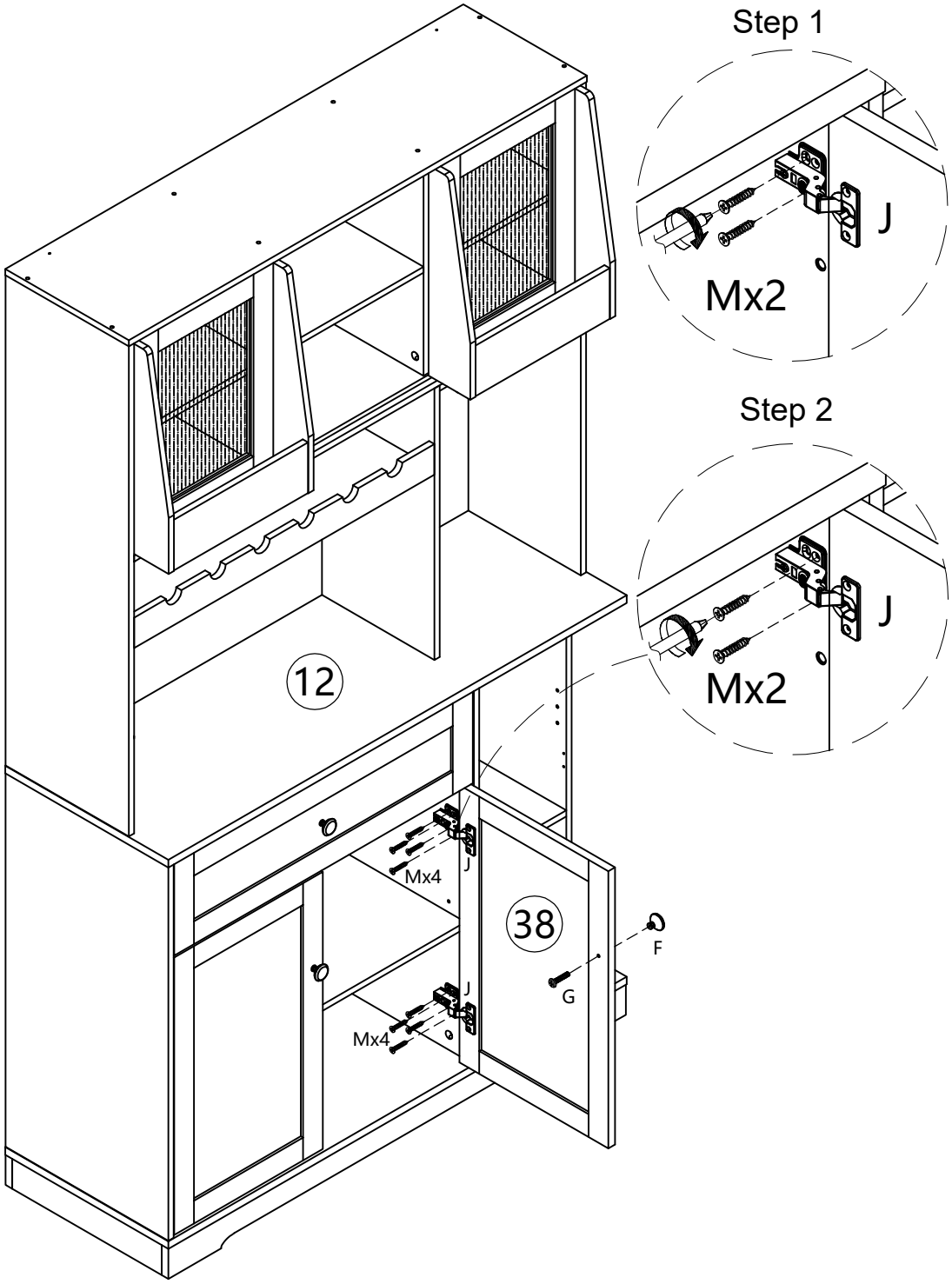

Note: The method for adjusting the door panel is on the last page.

Step 51.

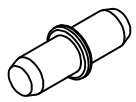

I x4

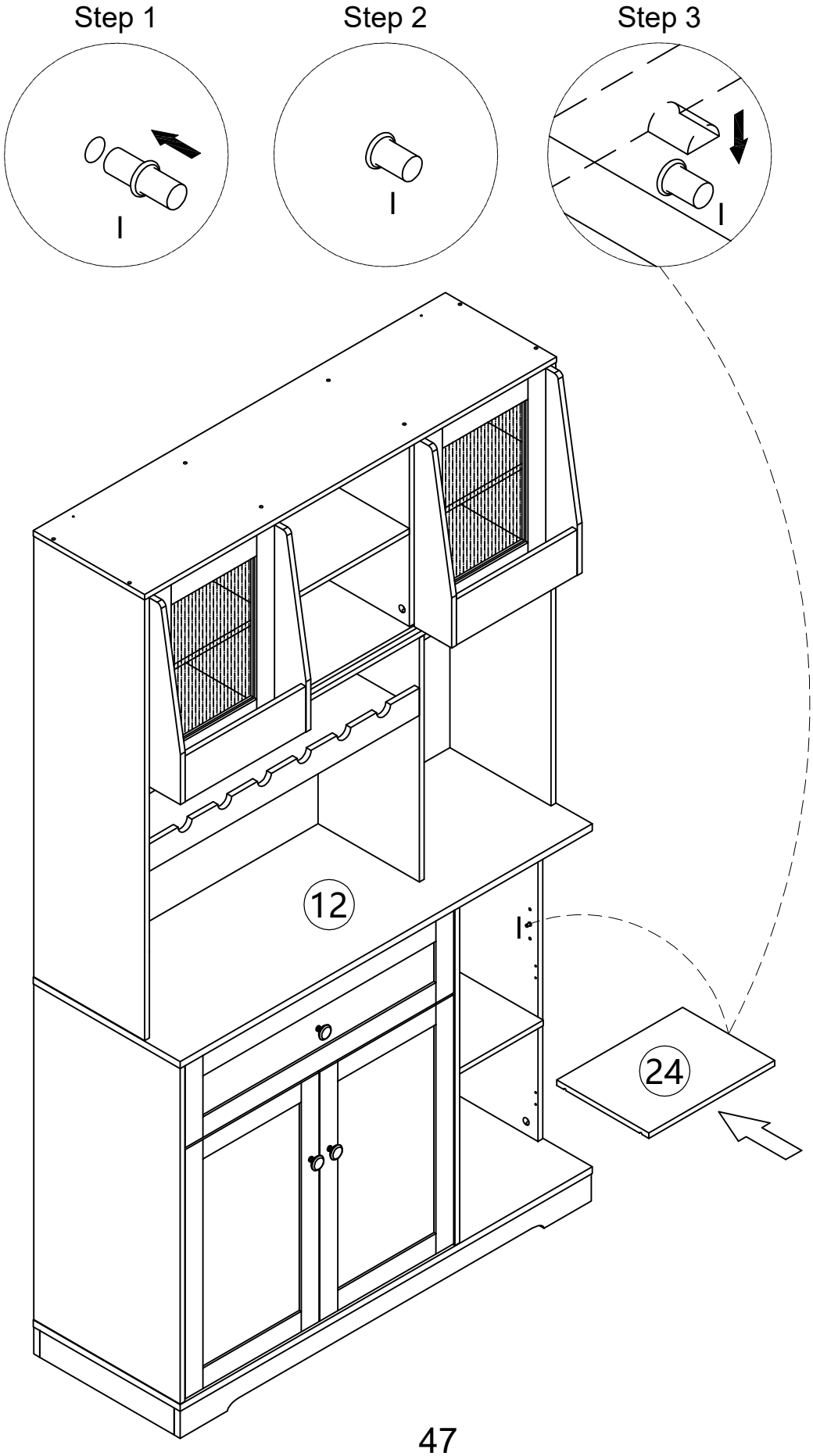

Step 52.

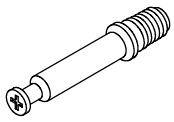

A x8

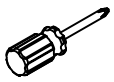

R x1

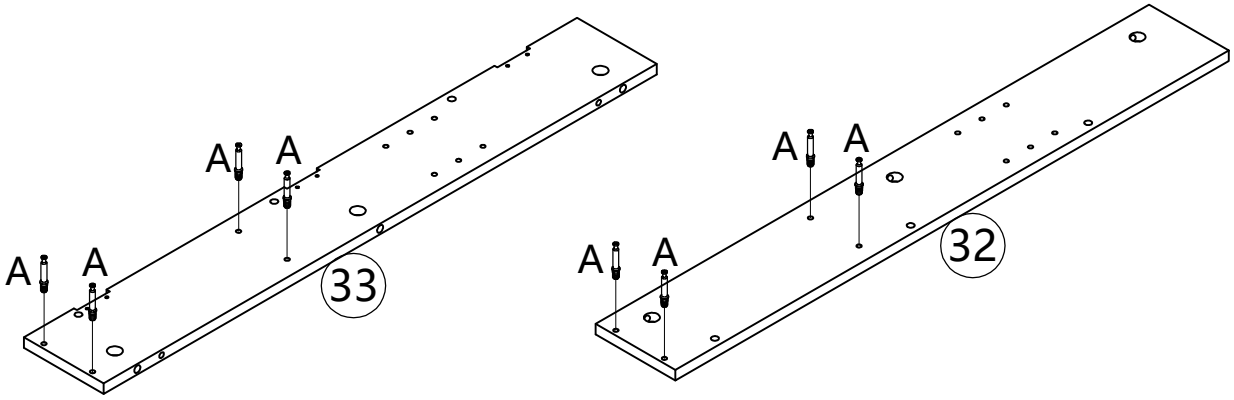

Step 53.



B x4

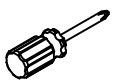

R x1

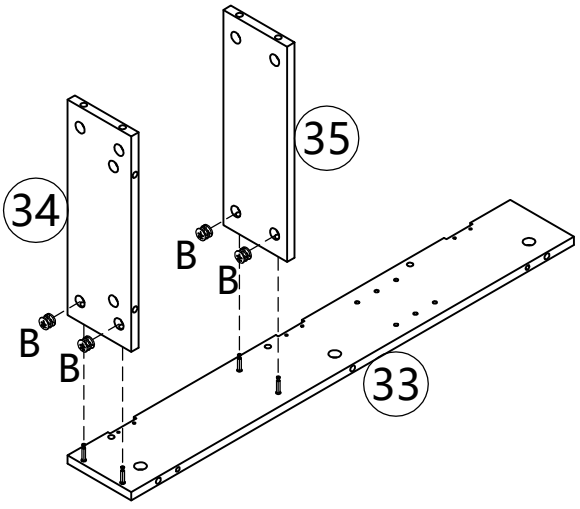

Step 54.



B x4

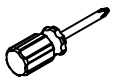

R x1

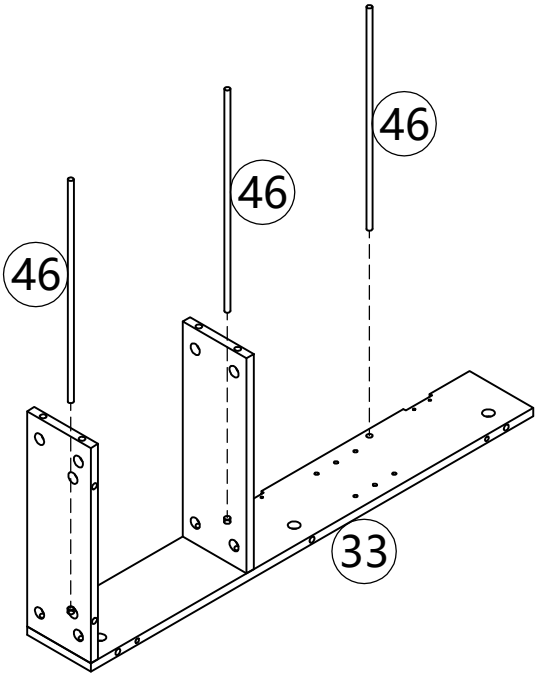

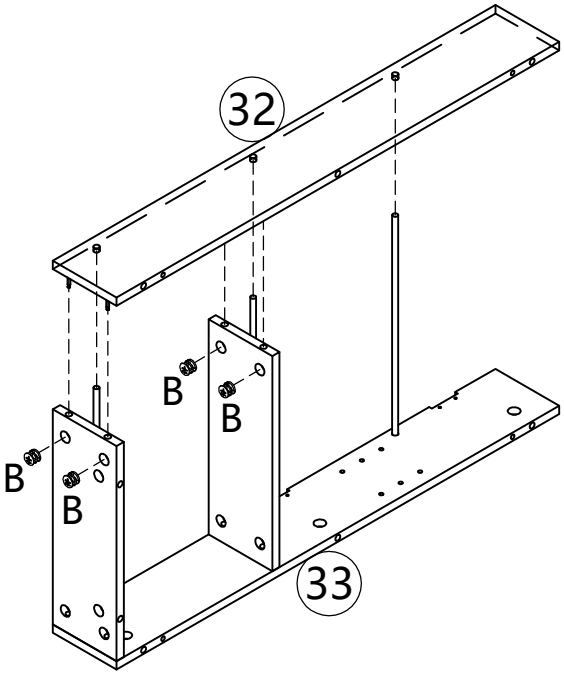

Step 55.

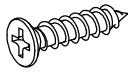	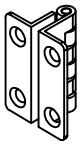	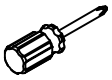
M x6	Q x3	R x1

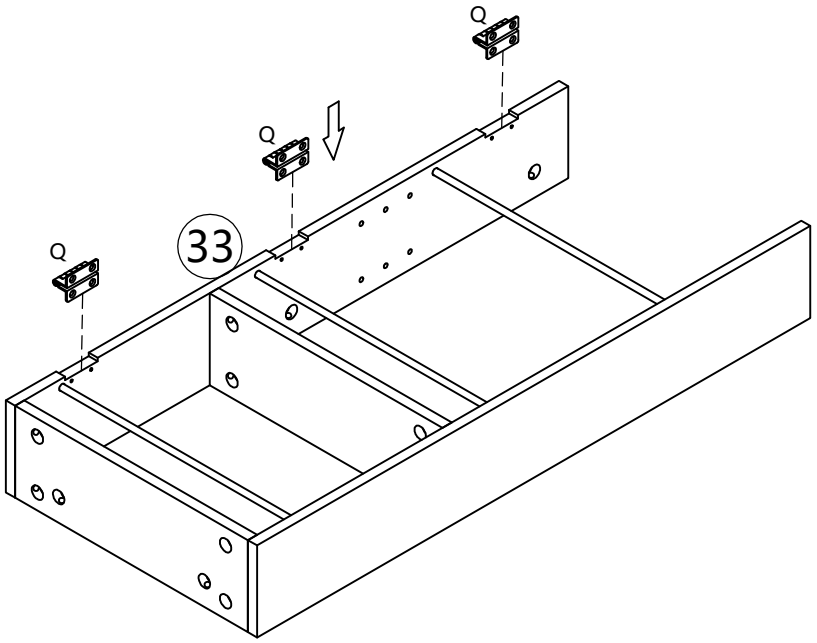

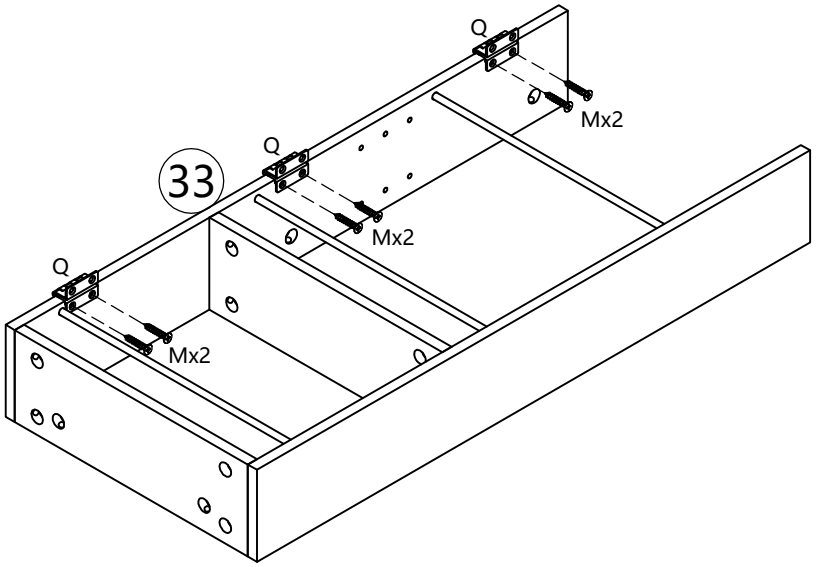

Step 56.

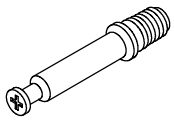
A x8


F x1

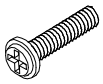
G x1

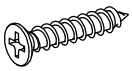
M x2

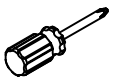
R x1

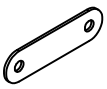
X x1

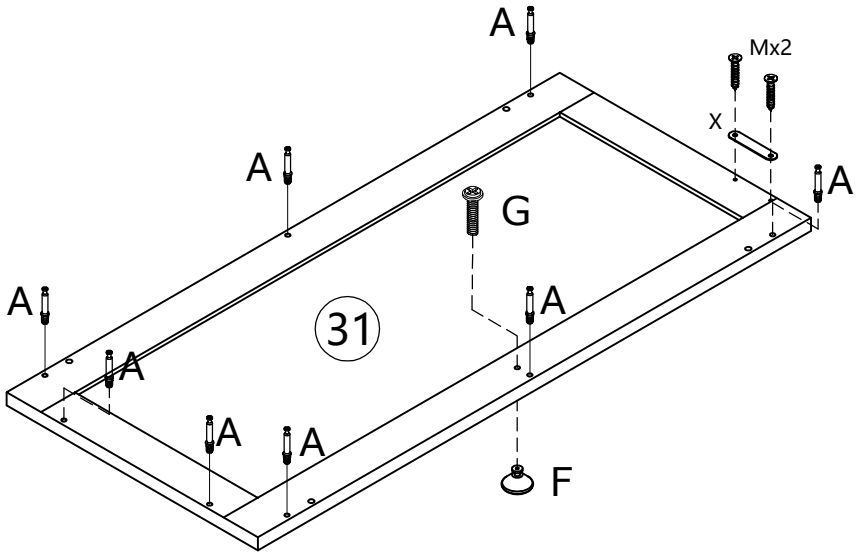

Step 57.


B x8

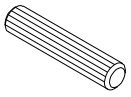
C x4

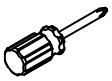
R x1


O x6

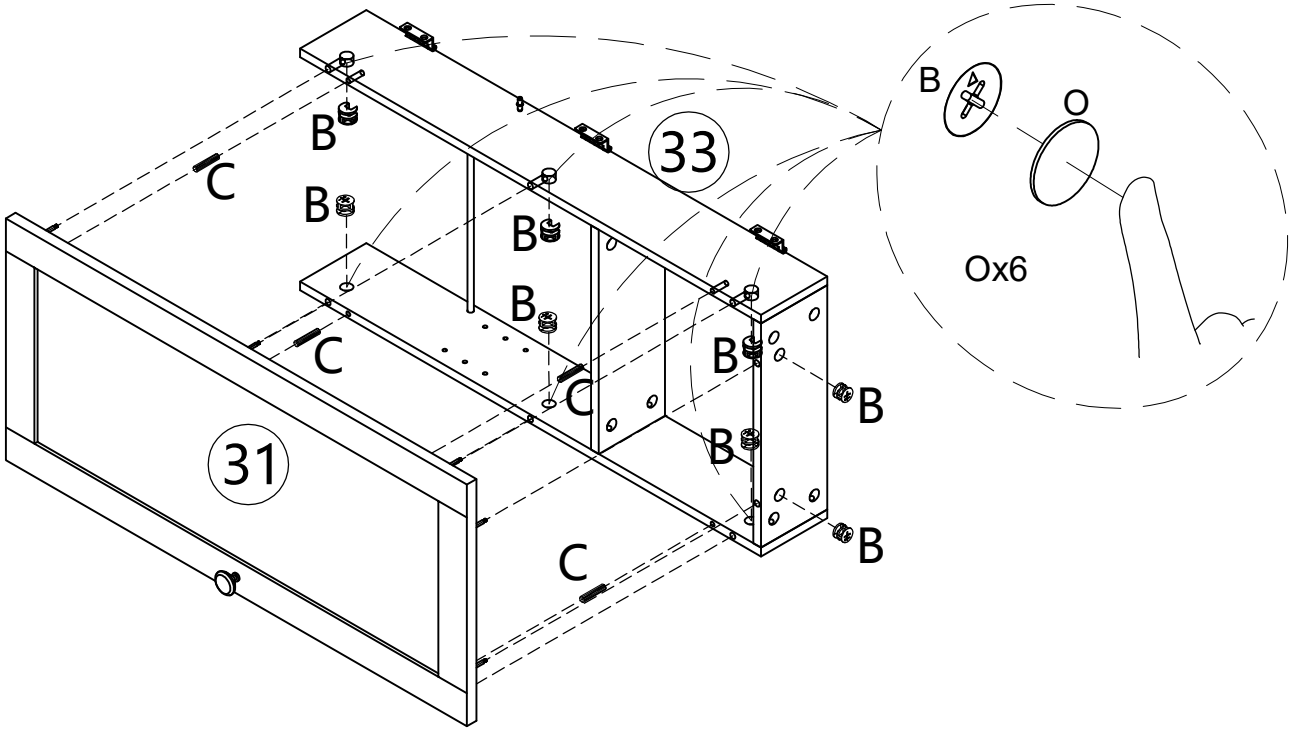

Step 58.

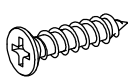	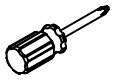
M x6	R x1

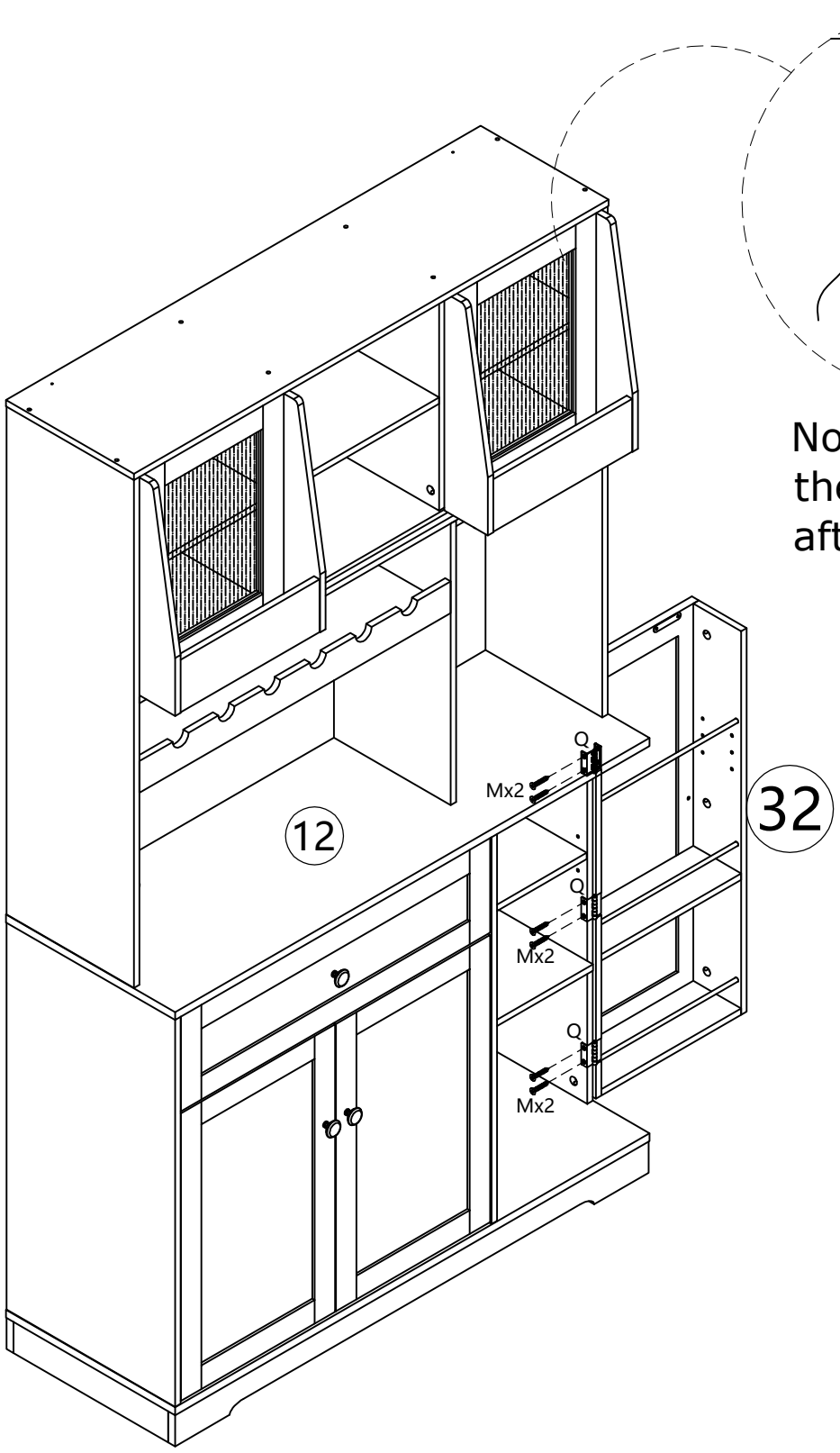

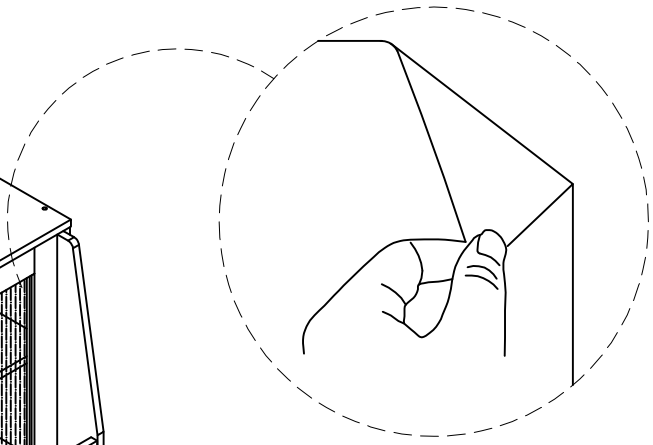

Note: Please tear off the protective film after installation.

Step 59.

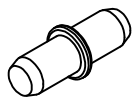

I x4

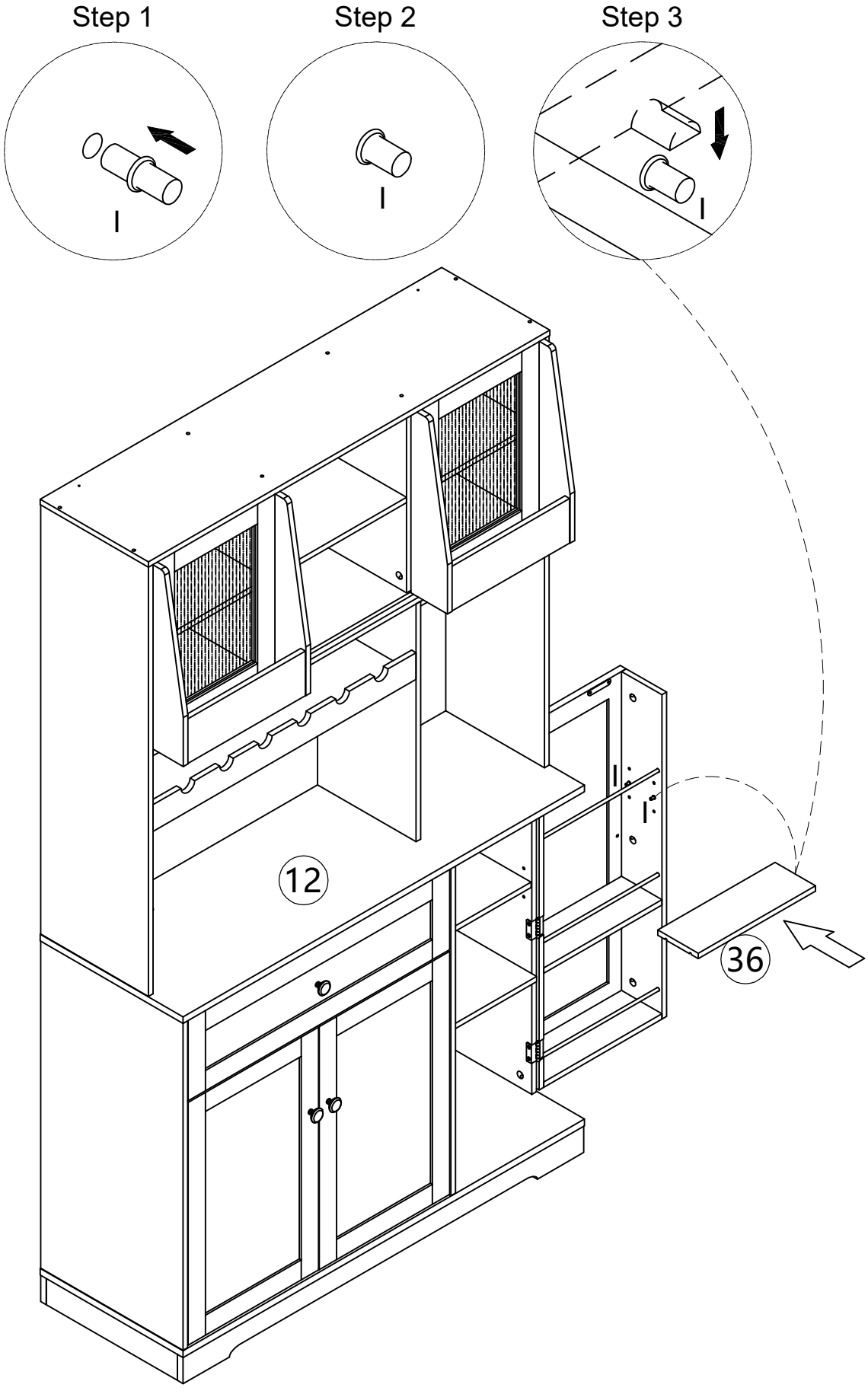

Step 60.



S x2

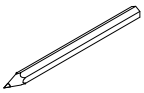



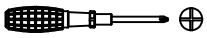

x1

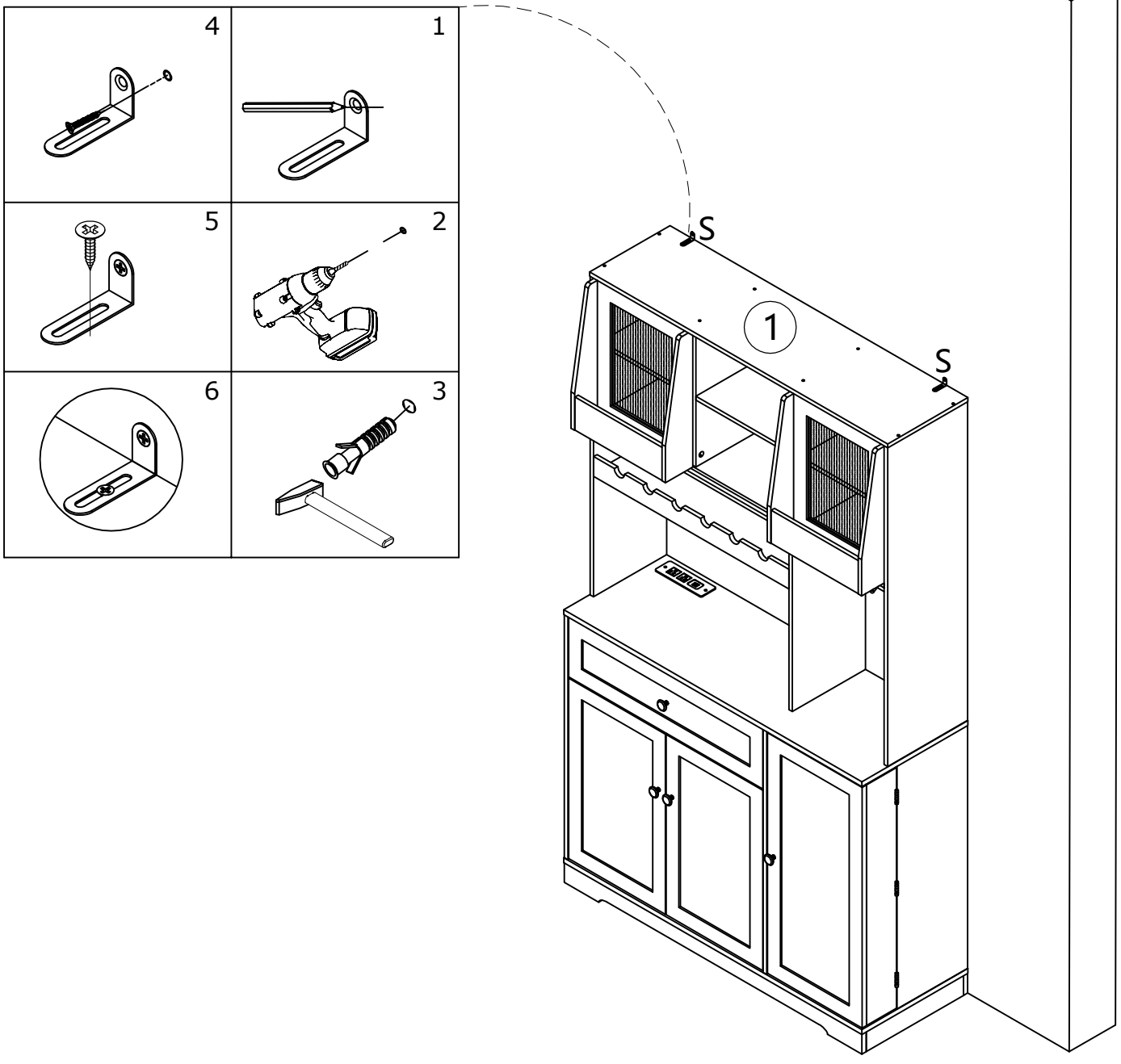

Step 61

Adjust & Align Door Hinges

Up & Down Adjustment

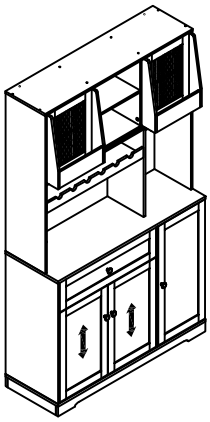

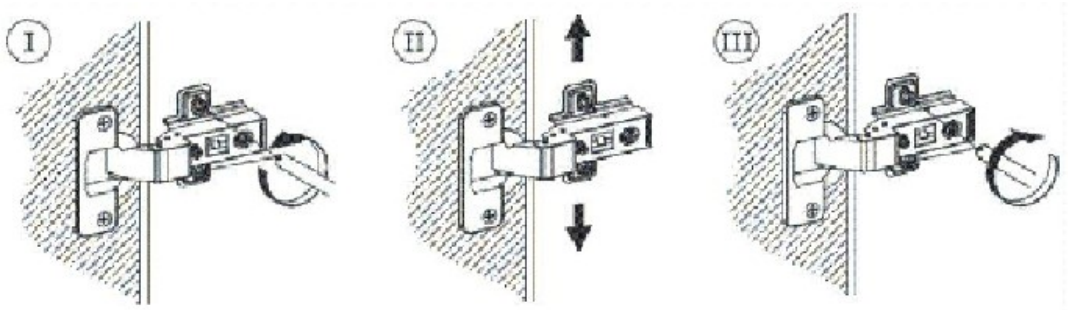

Left & Right Adjustment

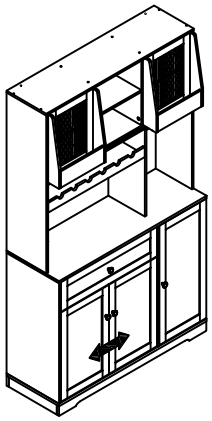

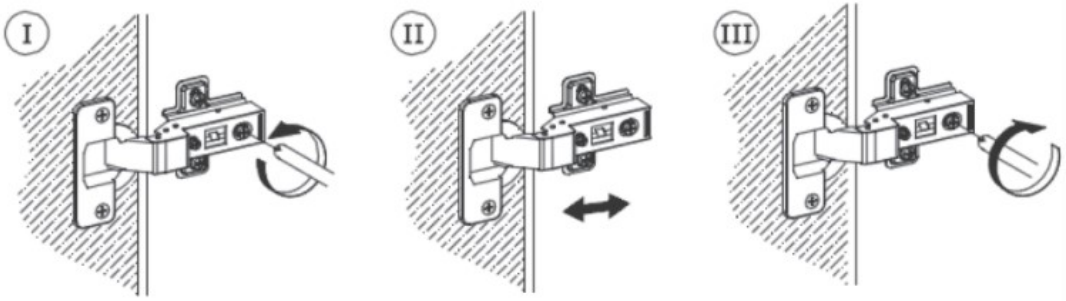

Forward & Back Adjustment

