ASSEMBLY INSTRUCTION

Caution : You must read this before you proceed

Care & Maintenance

- ⊘  • Not for commercial use. For residential use only.
- ✓  • Furniture may scratch foors. We recommennd using furniture pads to protect your floors.
- ⊘  • Do not put hot items directly on furniture surface.
- ⊘  • Do not clean furniture with harsh creansers or polish.
- ⊘  • Do not plase furnimture under direct sunlight.
- ⊘  • Do not plase furniture near heating or cooling vents.
- ⊘  • Do not write on furniture without a padded barrier to protect the surface.
- ⊘  • Do not place furniture outside. For indoor use only.
- ⊘  • Stains may be removed with mild soap solution and damp cloth.
- ⊘  • Children should not climb or jump on the furniture.

- ✓  • Dust and pick-up spills using a clean, non-colored, lint-free cloth.

Please look in carton for hardware packs and legs.
Sets often ship in multiple boxes and may arrive a day or two apart.

DINING CHAIR
N768P466147

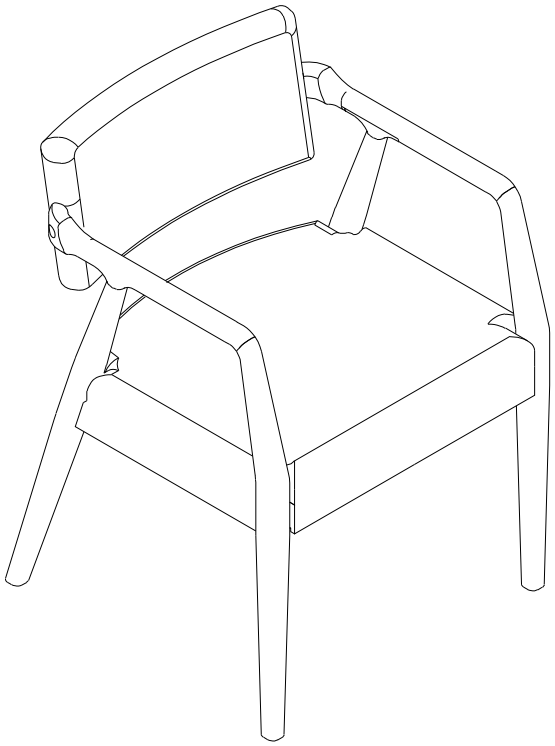

Parts List

Label	Picture	Description	QTY
A	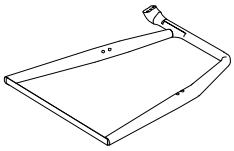	Right frame leg	1
B	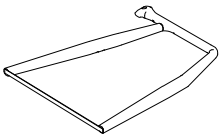	Left frame leg	1
C	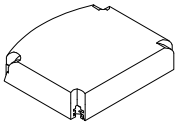	Seat cushion	1
D	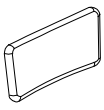	Backrest cushion	1

HARDWARE LIST

Label	Picture	Description	QTY
①		Bolt (5/16" x80mm)	8+1
②		Bolt (5/16" x35mm)	2+1
③		Spring washer (12 mm)	10+1
④		Flat washer (14 mm)	2+1
⑤		Flat washer (19 mm)	8+1
⑥		Allen wrench (M4)	1+1
⑦	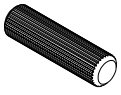	Dowel (Ø10x40mm)	4+1
⑧		Felt pad	2

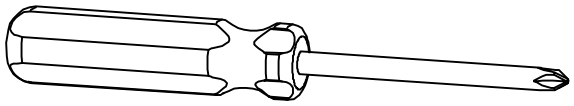

not included

Assembly preparation

Before begining assembly:

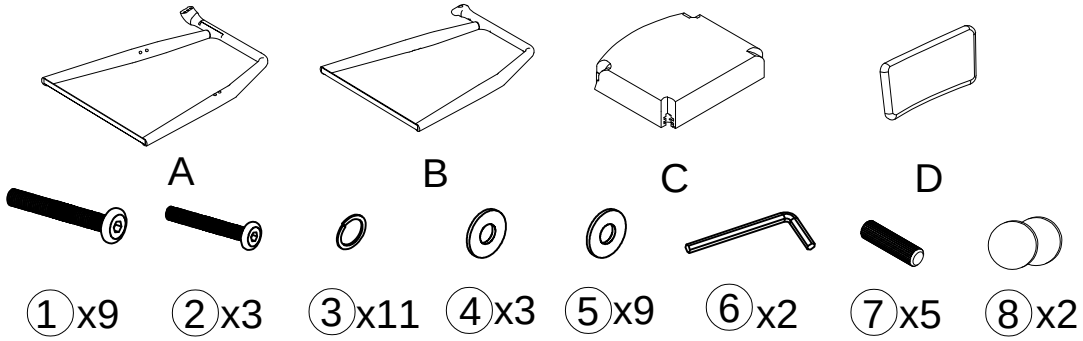

- Read instructions, cover to cover-
- Have 2 adults on hand fo assembly-
- Do not assemble on flooring of carpet-
- Assemble on a clean non-marring suface (packing foam)-
- Save all packaging until finshed-

Assembly steps

Overview

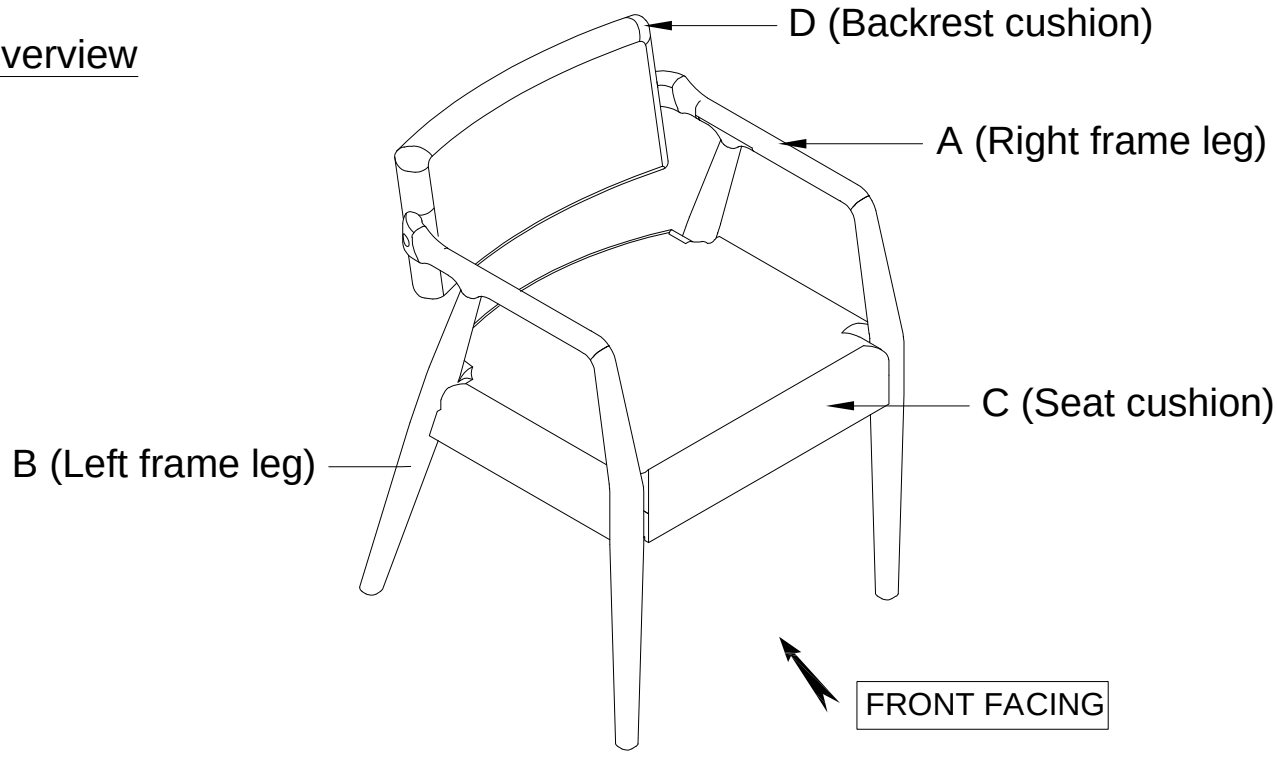

This chair has multiple parts and may require up to 30 minutes to assemble. To give you an overview of the chair parts, the above picture is provided to help you put the various parts into perspective. Please read through the instructions below to familiarize yourself with the parts and steps before assembly.

Step 1

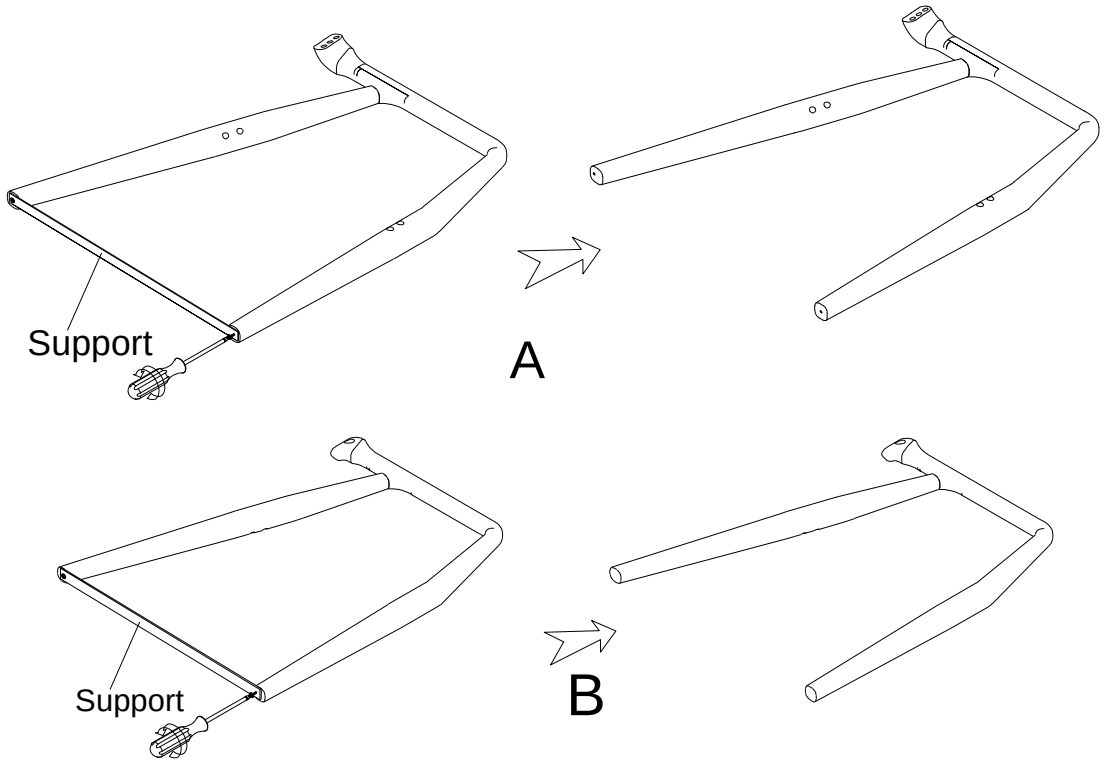

Remove the screws and support beams on the frame legs.

Step 2

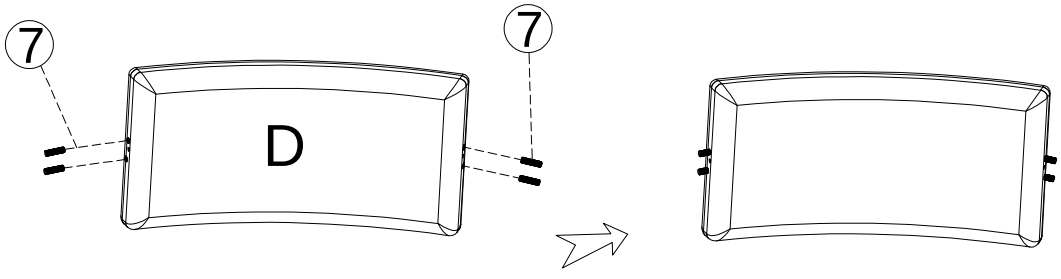

Attach dowel ⑦ into backrest cushion D.

Step 3

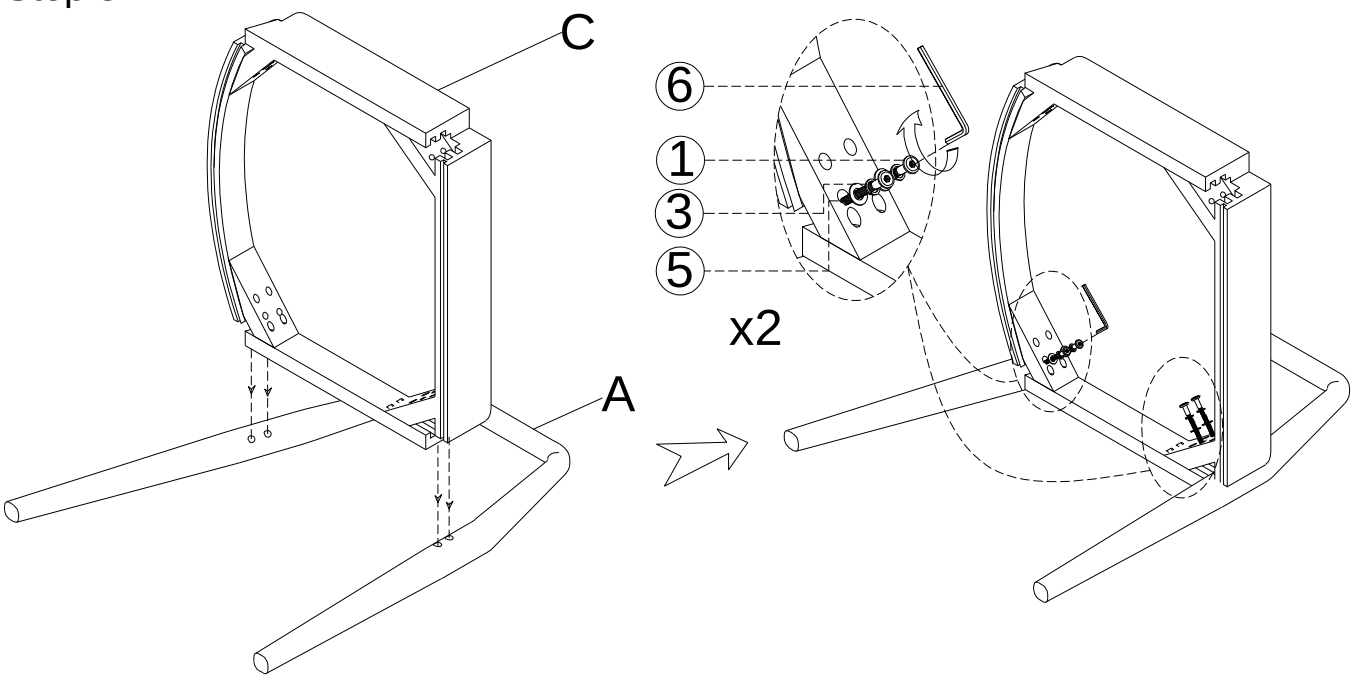

Attach seat cushion C into right frame leg A using bolt①, spring washer ③, flat washer⑤ and allen wrench ⑥. Do not full tighten.

Step 4

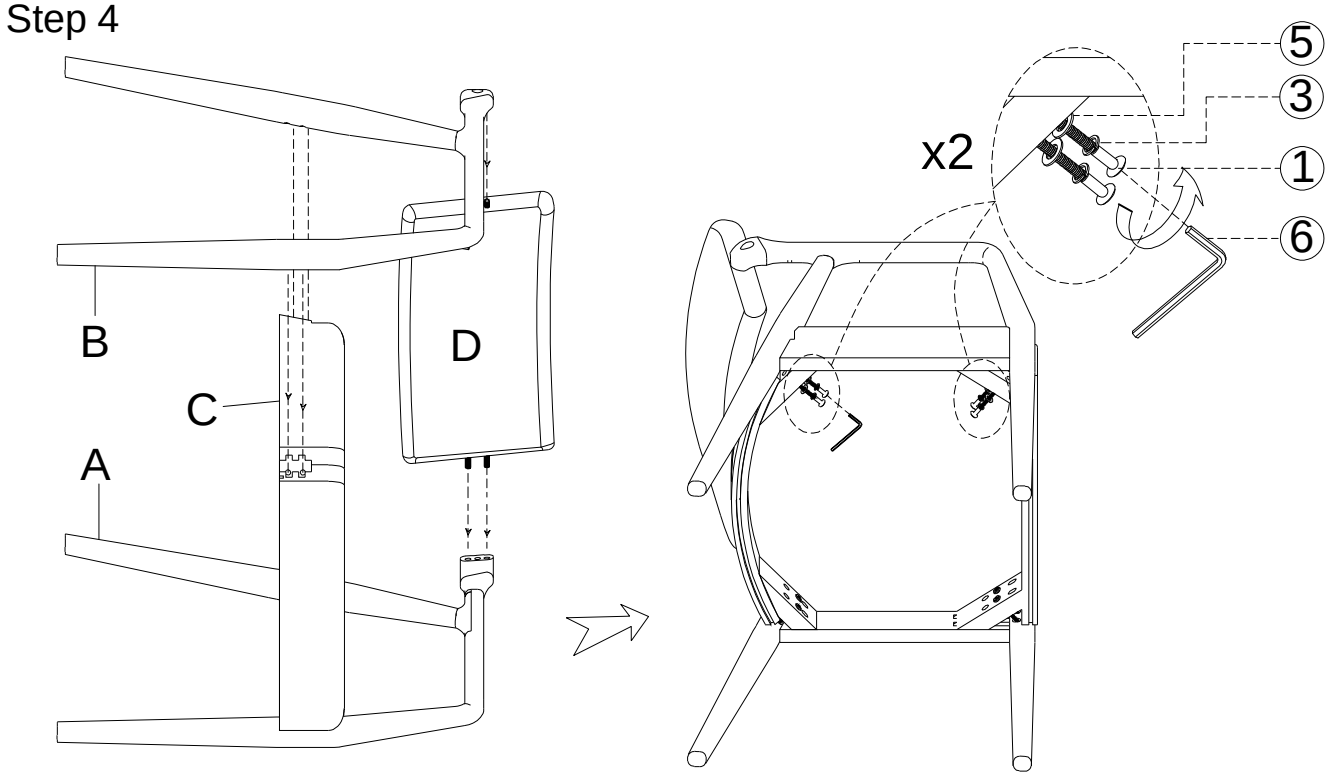

Attach backrest cushion D into right frame leg A. Attach left frame leg B into seat cushion C using bolt ①, spring washer ③, flat washer⑤ and allen wrench ⑥. Do not full tighten.

Step 3

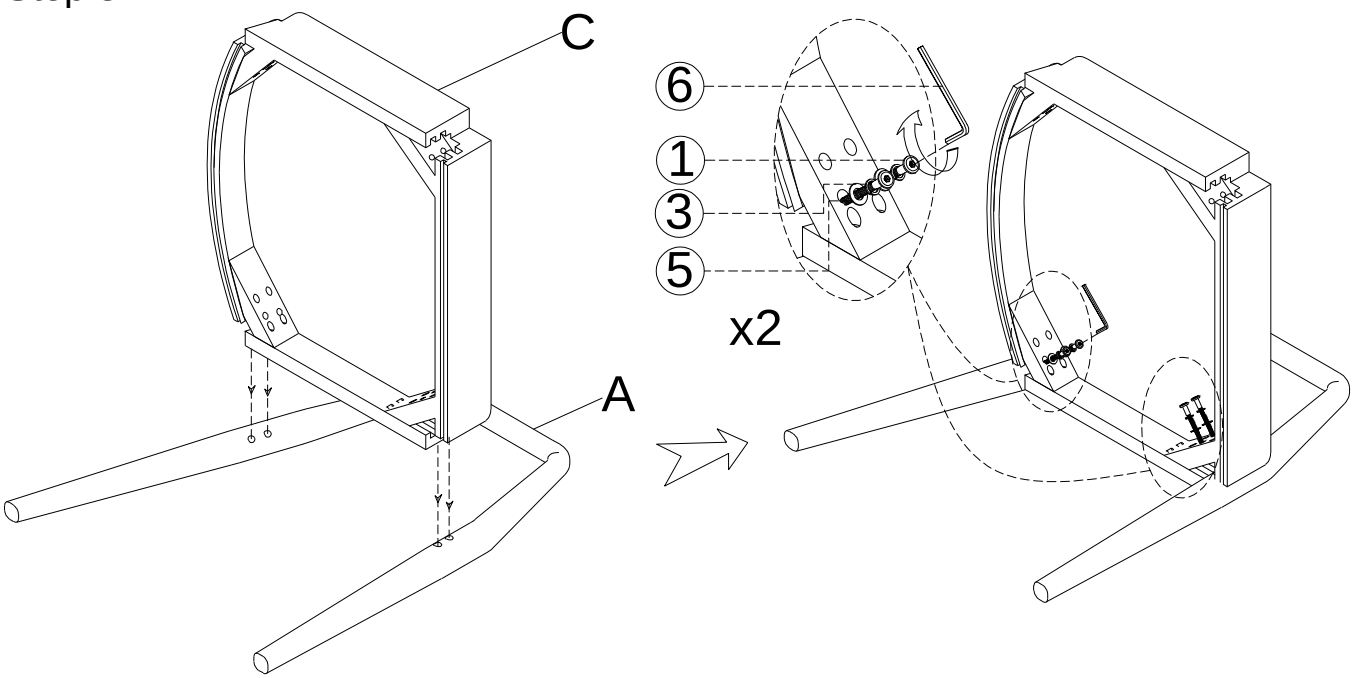

Attach seat cushion C into right frame leg A using bolt①, spring washer ③, flat washer⑤ and allen wrench ⑥. Do not full tighten.

Step 4

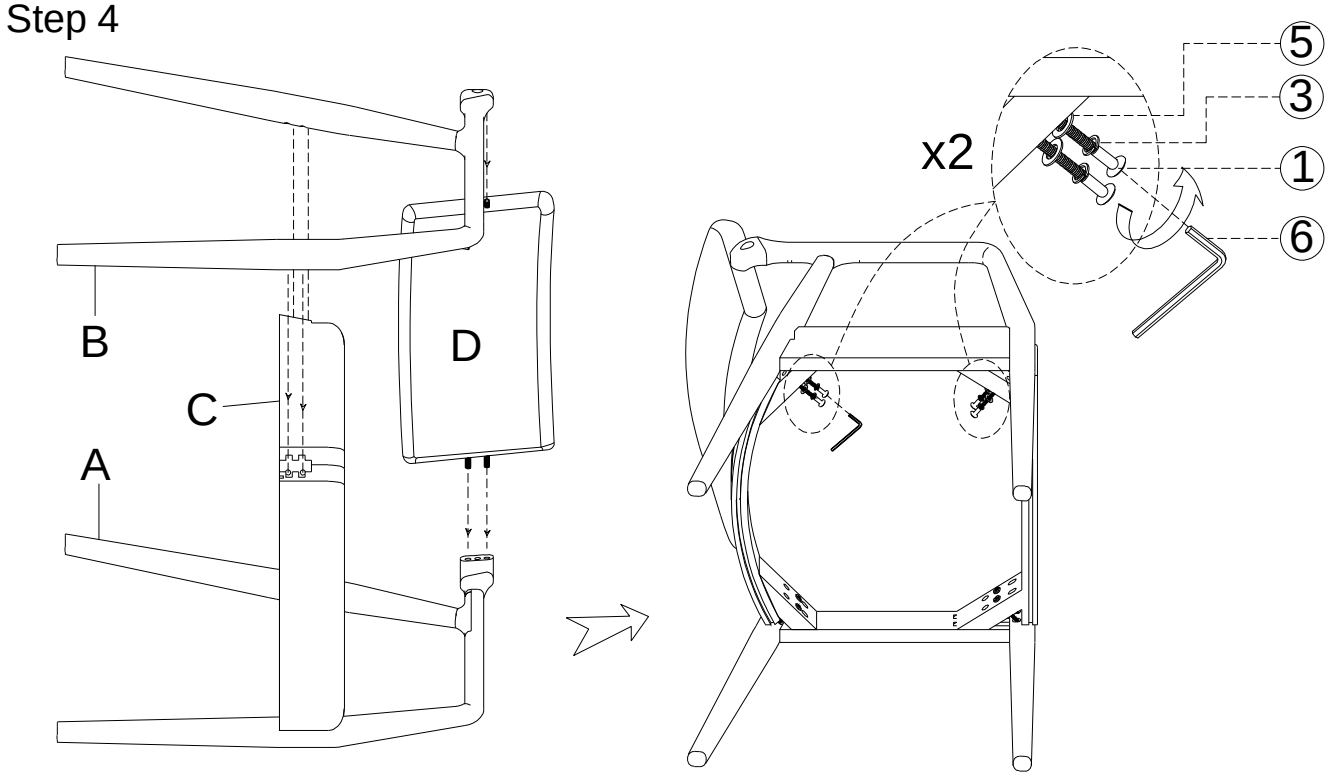

Attach backrest cushion D into right frame leg A. Attach left frame leg B into seat cushion C using bolt ①, spring washer ③, flat washer⑤ and allen wrench ⑥. Do not full tighten.

Step 5

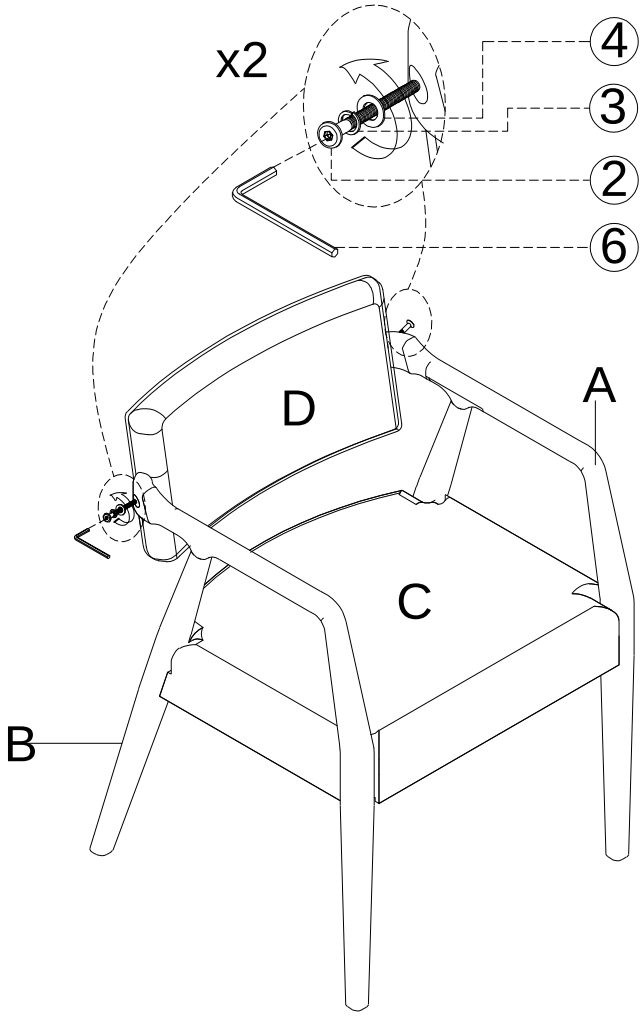

Stand the chair up, using bolt ②, spring washer ③, flat washer④ and allen wrench ⑥.

After checking the chair, If no problem, pls tighten all the bolts.
Place the chair on a LEVEL SURFACE to check for wobbles .

CAUTION : When tightening these screws, tighten sequentially.
DO NOT tighten any screw fully and then towards the next one.
This would cause the frame to warp.
If there is still wobbles, loosen the screws and execute this same process.
WARNING!! IF IT IS NOT STABLE , IT COULD LEAD TO DAMAGING THE PRODUCT.

Step 6

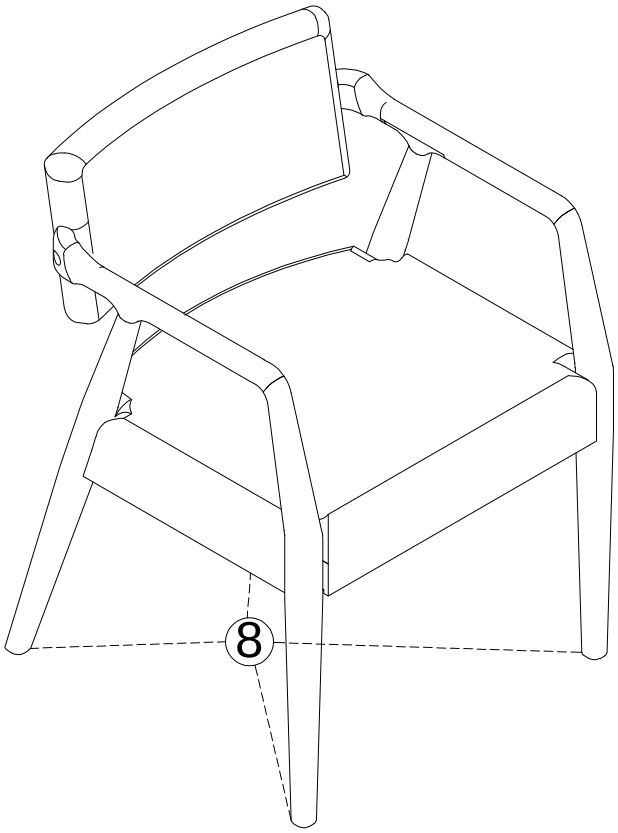

Note: If missing or fall out the felt pad, attach new one ⑧ .

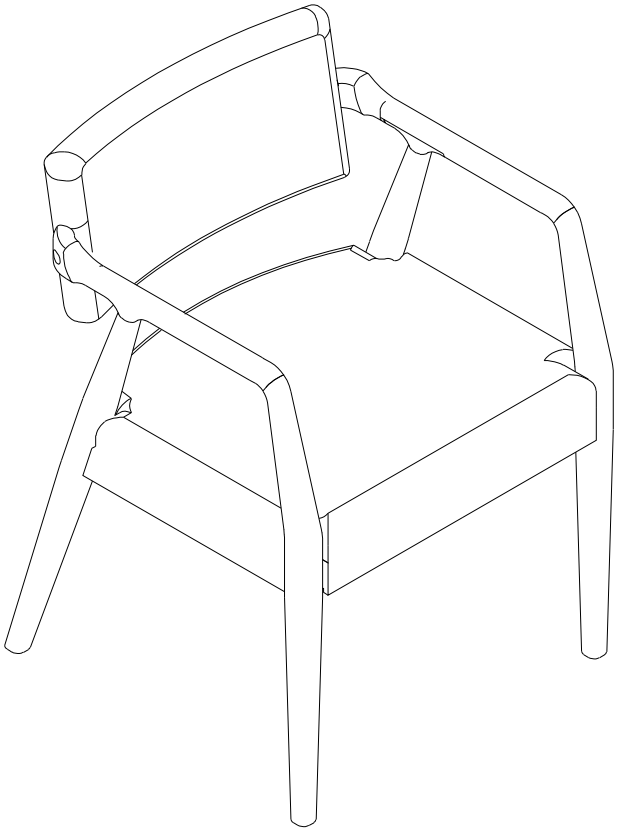

Your chair is ready for use .
This chair can only be used on a flat, level surface.