ASSEMBLY INSTRUCTIONS

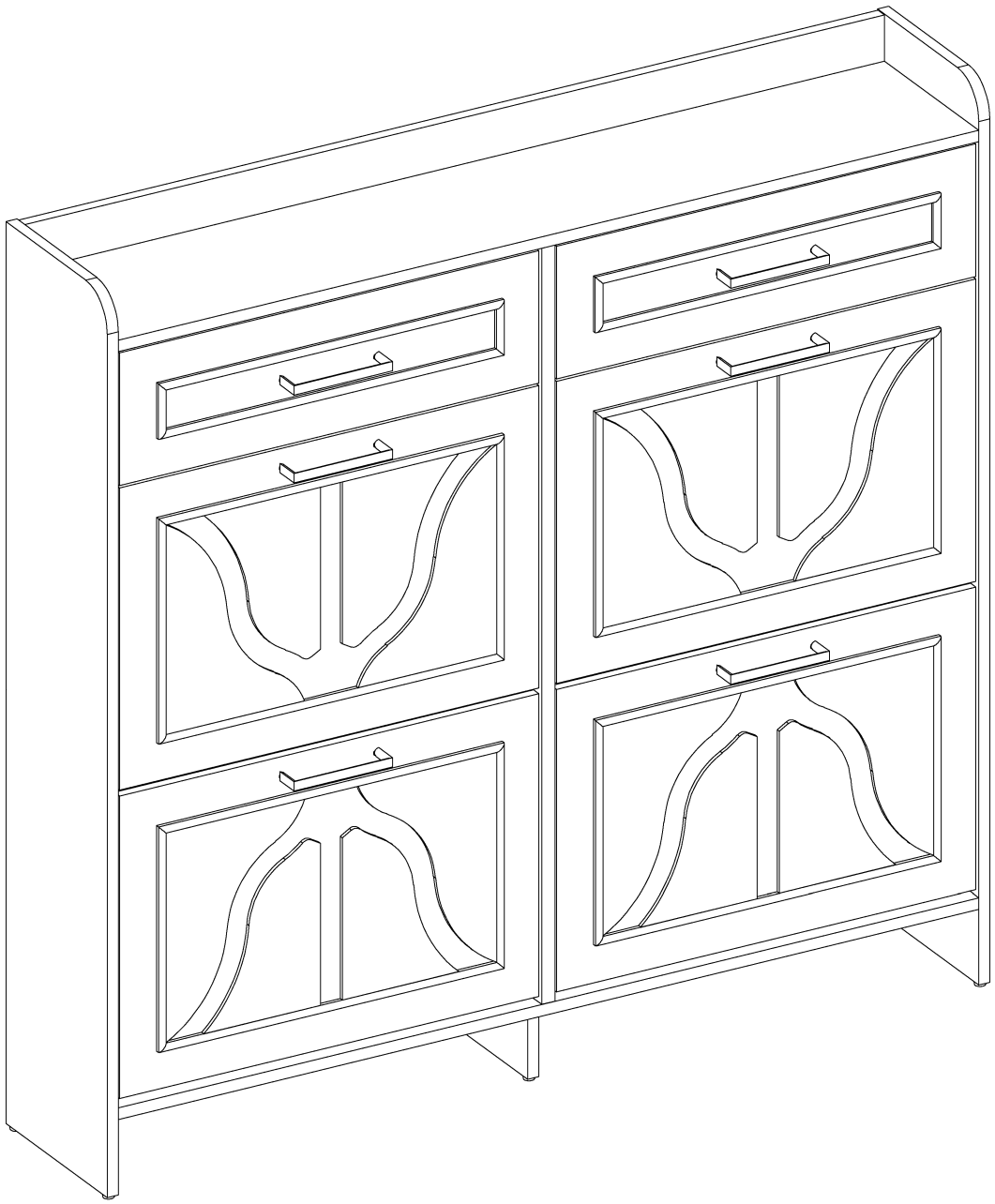

VERSION-01

Notice:

1. Please unbox the item from the side with an open label and put a carpet on the floor to avoid scratching it.
2. Follow the installation instructions carefully. before installation, please ensure that all accessories are present. For large items, we advise you to install them with 2 or more people for faster and safer installation.
3. Do not fully tighten the screws during initial assembly.Fully tighten the screws only once all pieces are correctly assembled.
4. Do not stand, climb, or swing on the product.
5. If you encounter any problems during installation, please contact our customer service.



Recommended installers:2

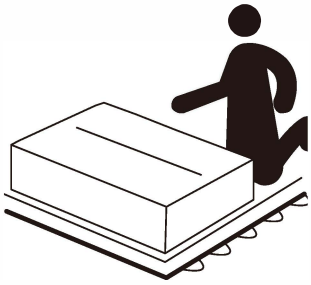

Put a carpet on the floor before unpcking

SAFETY TIPS:
Static charge may cause dust on foam - clean with a dry or damp cloth.
Small foam strands may be present - handle gently and dispose of properly.
Do not burn or incinerate.
Check local recycling guidelines.

Item no.	Reference Image	Qty.
1	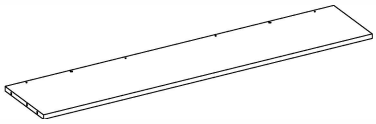	×1
3	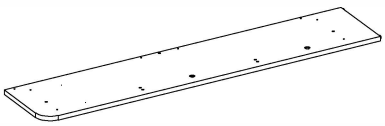	×1
5	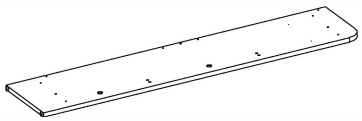	×1

Item no.	Reference Image	Qty.
2	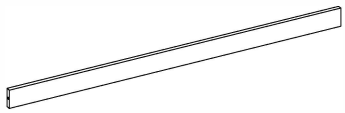	×1
4	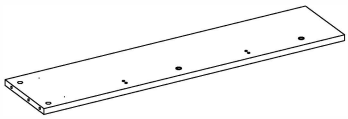	×1
6	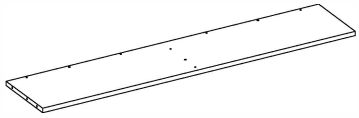	×1

Item no.	Reference Image	Qty.
7	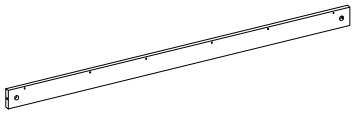	×1
9	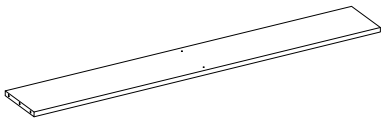	×1
11	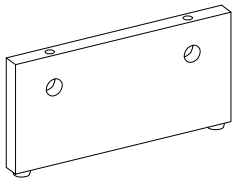	×1
13	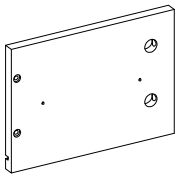	×2
15	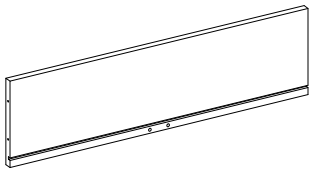	×2
17	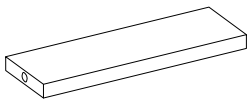	×2

Item no.	Reference Image	Qty.
8	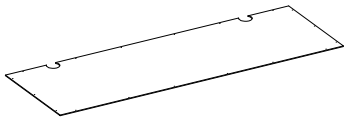	×1
10	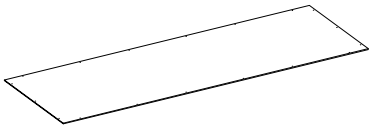	×1
12	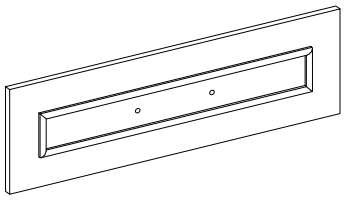	×2
14	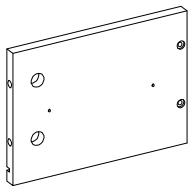	×2
16	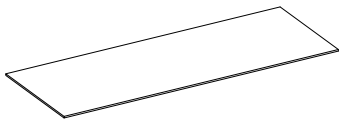	×2
18	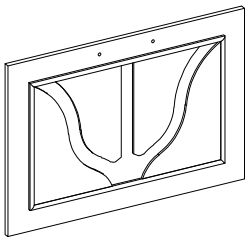	×2

Item no.	Reference Image	Qty.
19	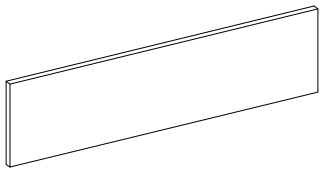	×4
21	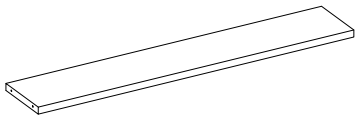	×4

Item no.	Reference Image	Qty.
20	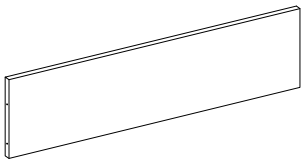	×4
22	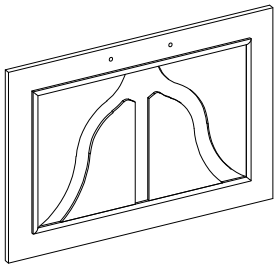	×2

Item no.	Reference Image	Qty.
A	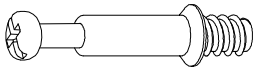	×30+2
C	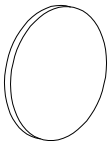 ϕ30mm	×30+2
E	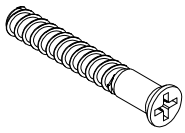 ϕ5*50mm	×12+1
G	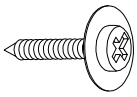 ϕ3.5x12mm	×36+2
I	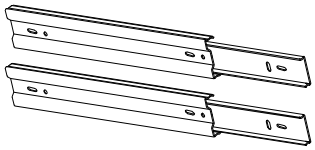 200mmL	×2
K	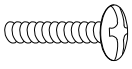 ϕ4x18mm	×12+1

Item no.	Reference Image	Qty.
B	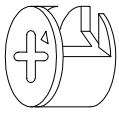 ϕ15x9.5mm	×30+2
D	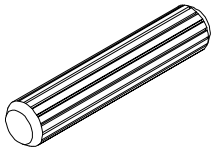 ϕ8x30mm	×12+1
F	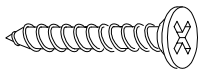 ϕ4x38mm	×12+1
H	 ϕ3.5x12mm	×16+1
J	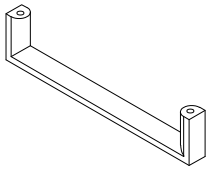	×6
L	 ϕ3.5x16mm	×56+2

Item no.	Reference Image	Qty.
M	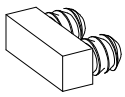	×8
O	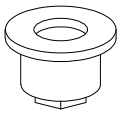	×8
Q	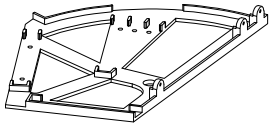 Right Shoe Cubby Bracket	×4
S	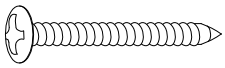 ϕ4x35mm	×2
U	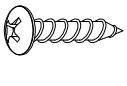 ϕ4x12mm	×2

Item no.	Reference Image	Qty.
N	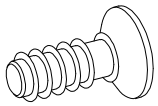 M4x8.5mm	×8
P	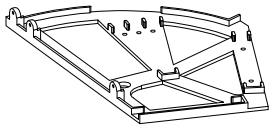 Left Shoe Cubby Bracket	×4
R		×2
T	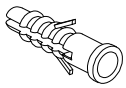	×2

⚠ Tips: The number after "+" represents the spare hardware.

Explosion Diagram

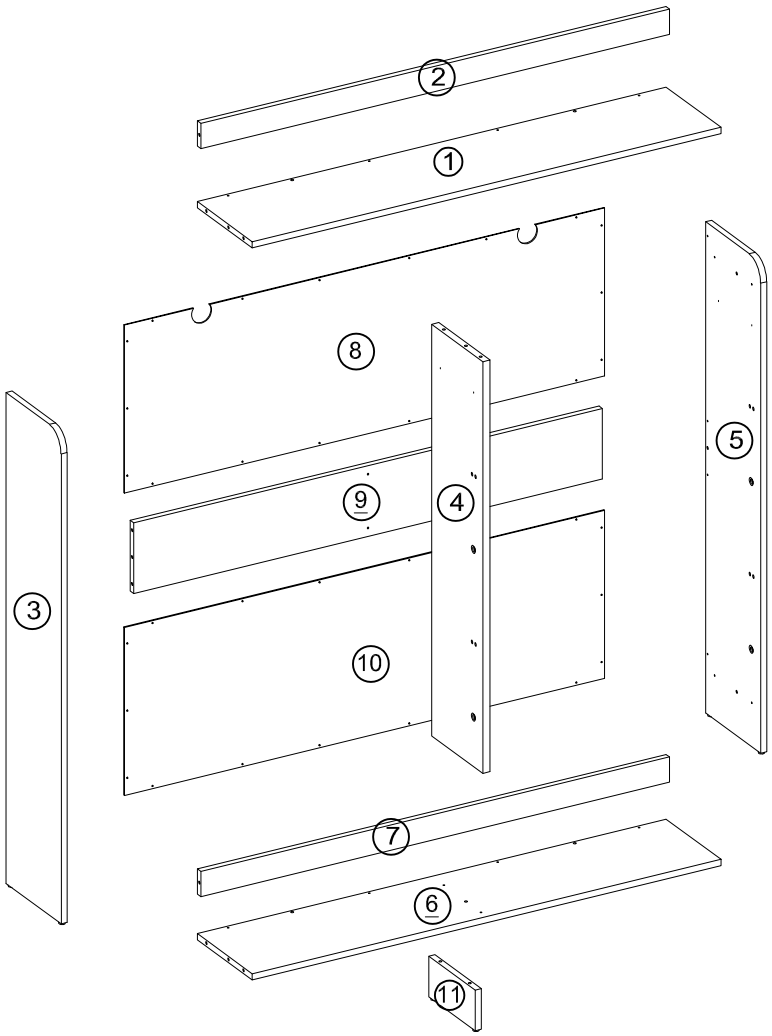

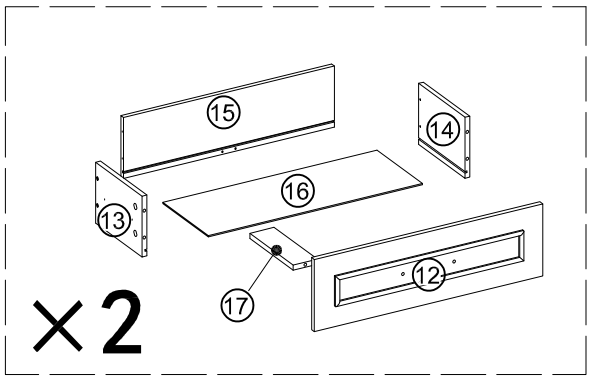

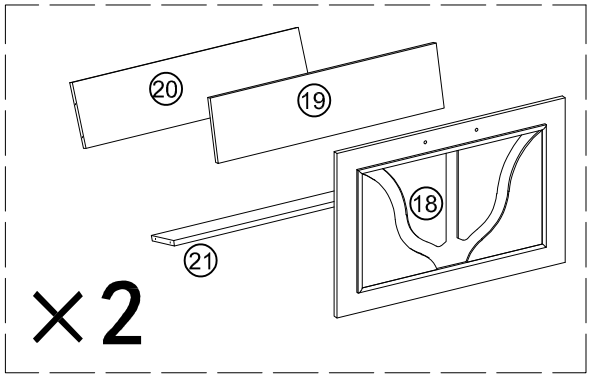

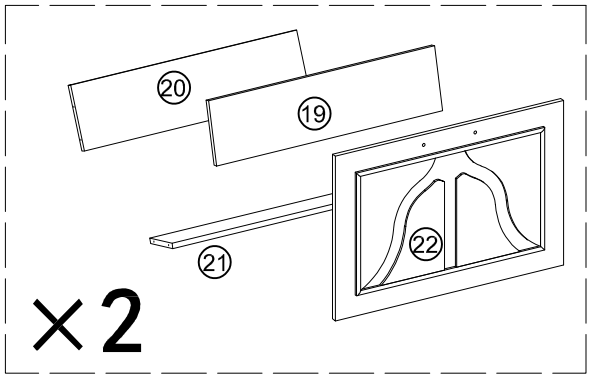

1

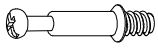

Ax30

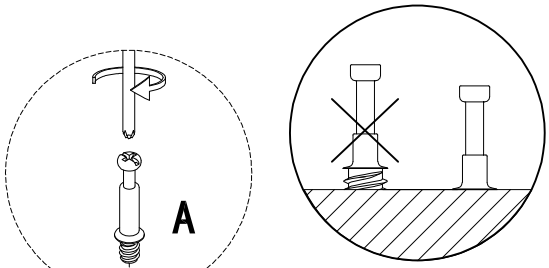

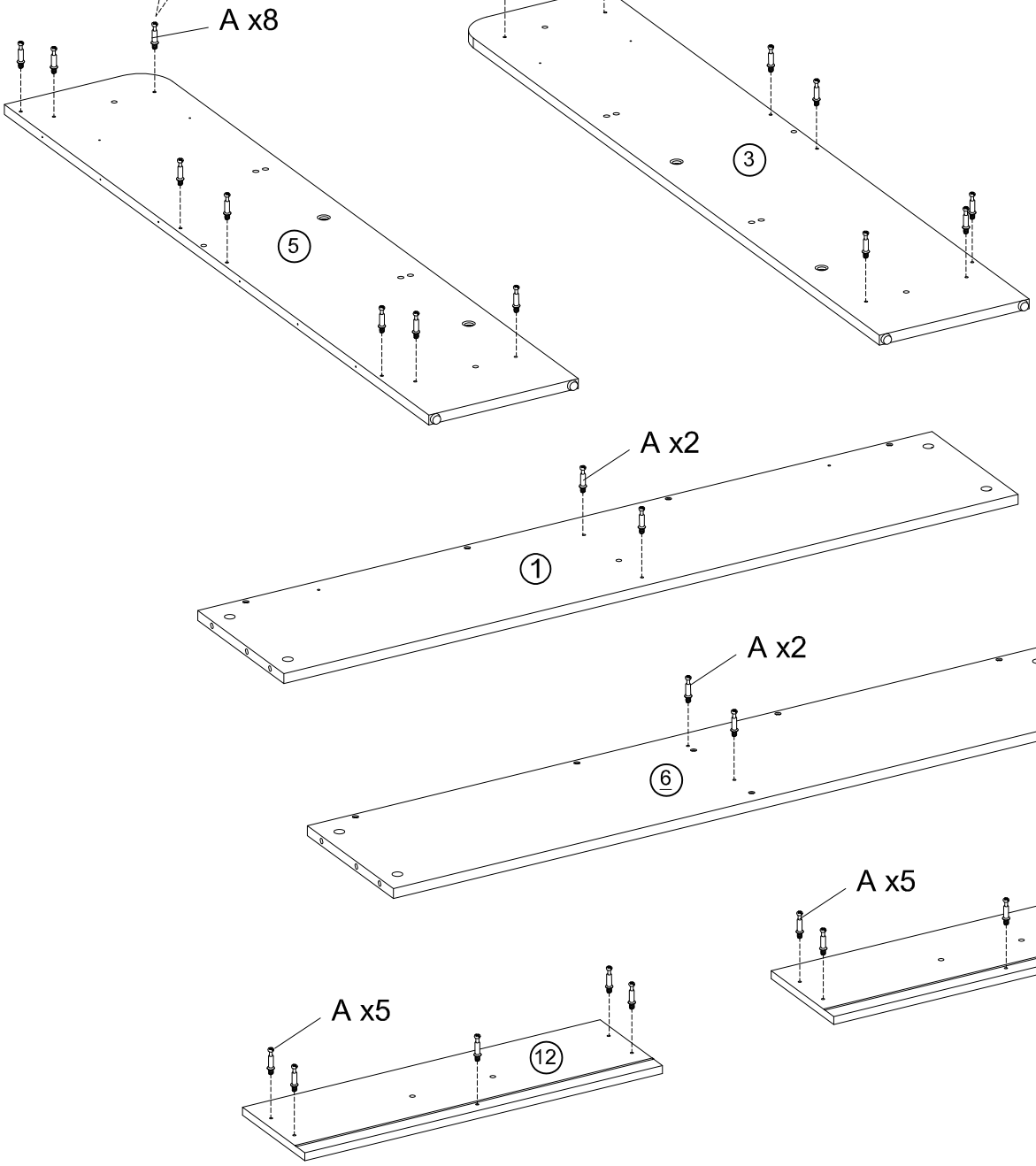

2

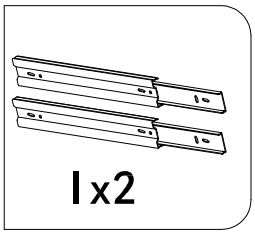

×2

Slider arm

I2

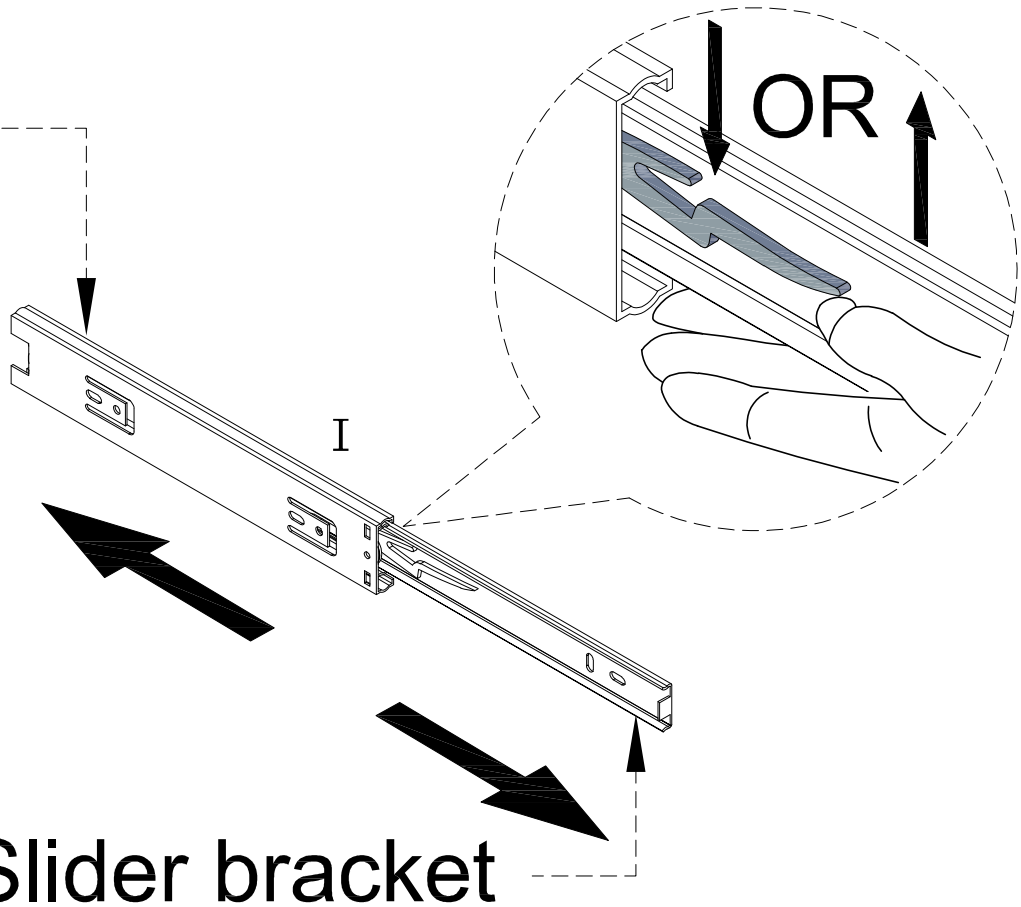

Slider bracket

I1

Sperate the side runners by extending the slide runner all the way forward. Press the plastic release lever of the ball bearing slides up pull the slide runner complete out.

3

Fx12

×2

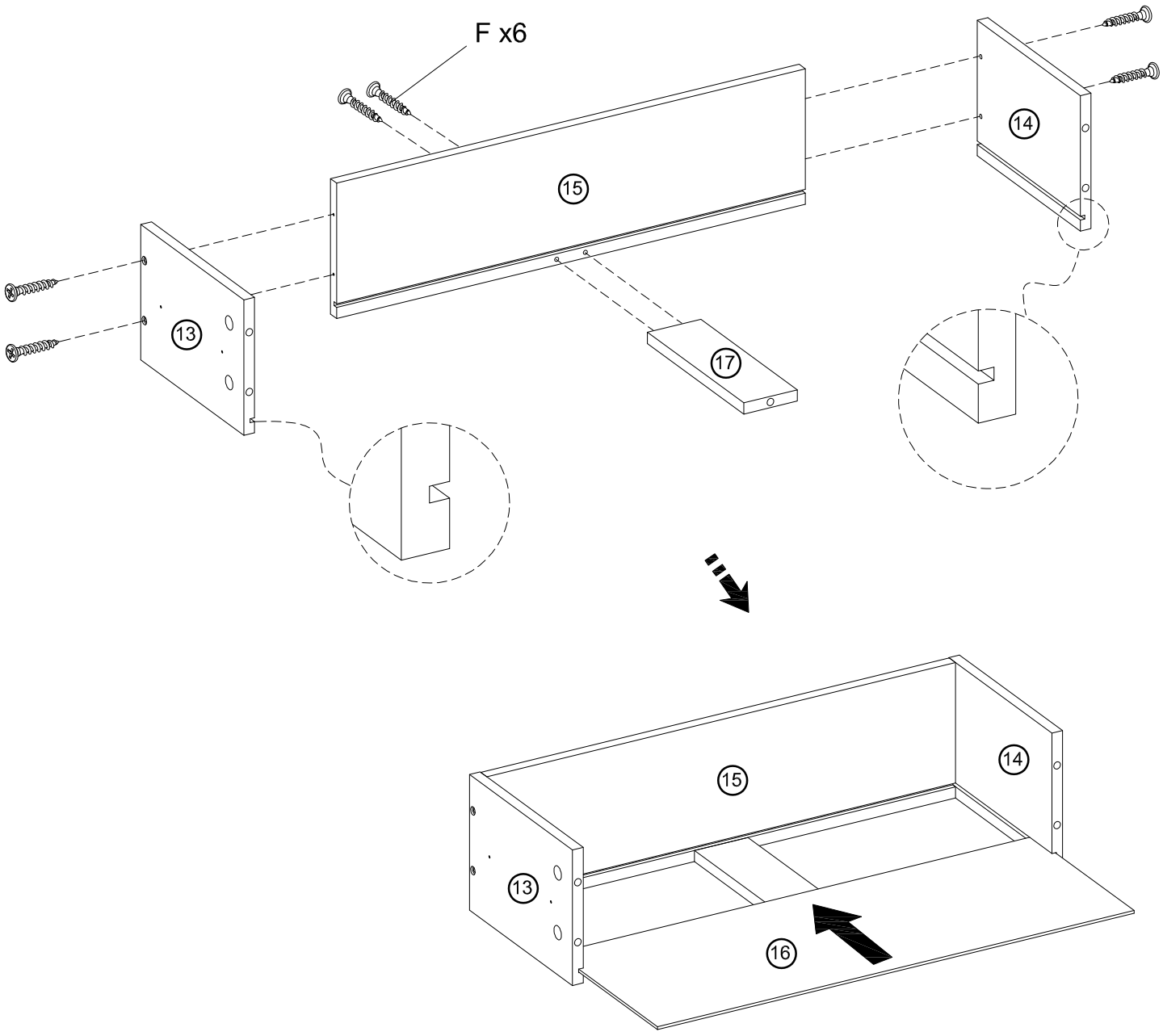

4


Bx10

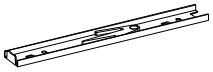
I1x4


Hx8

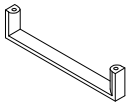
Jx2


Kx4

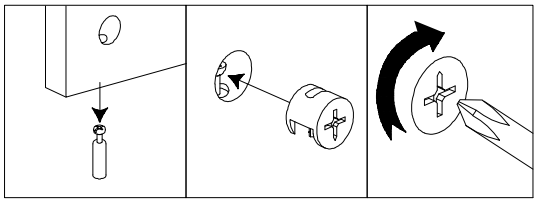

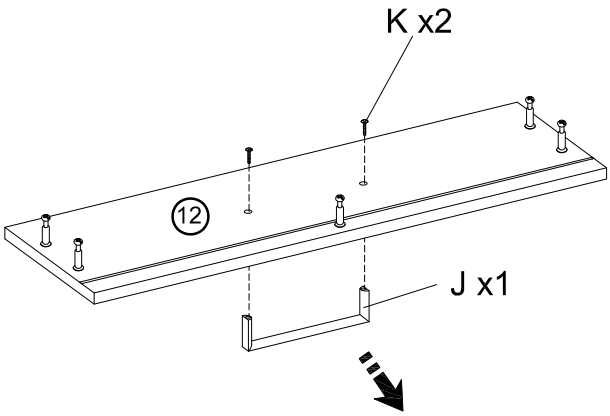

×2

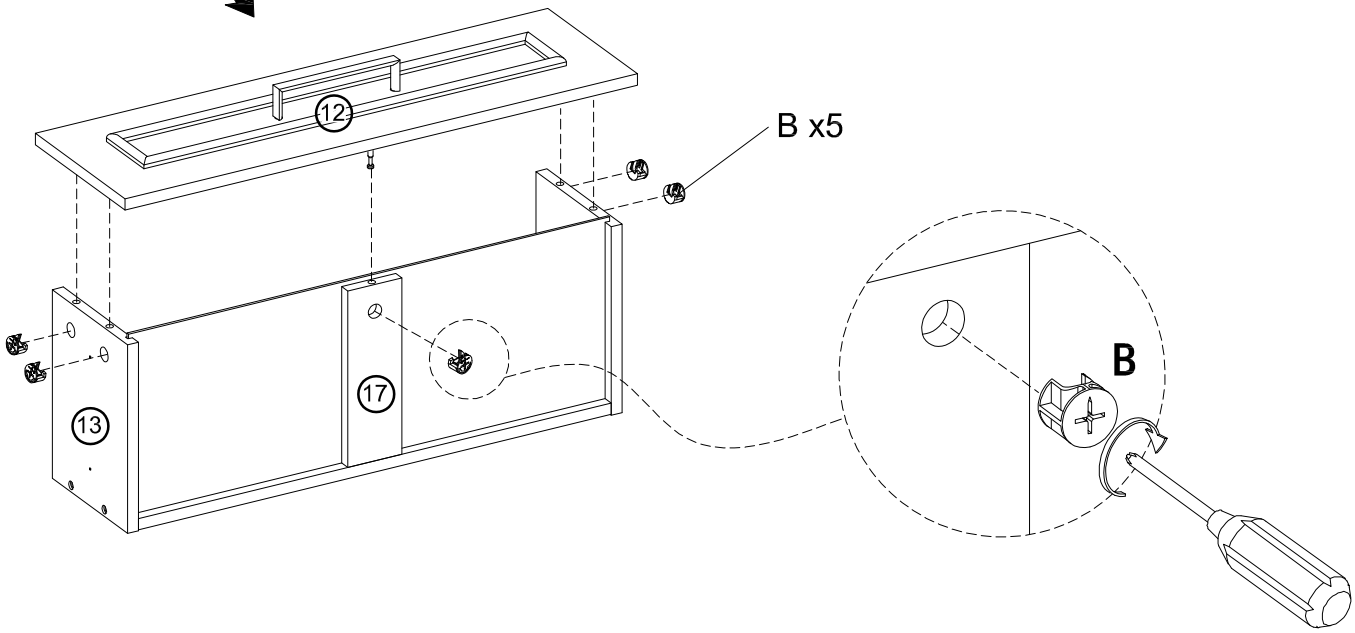

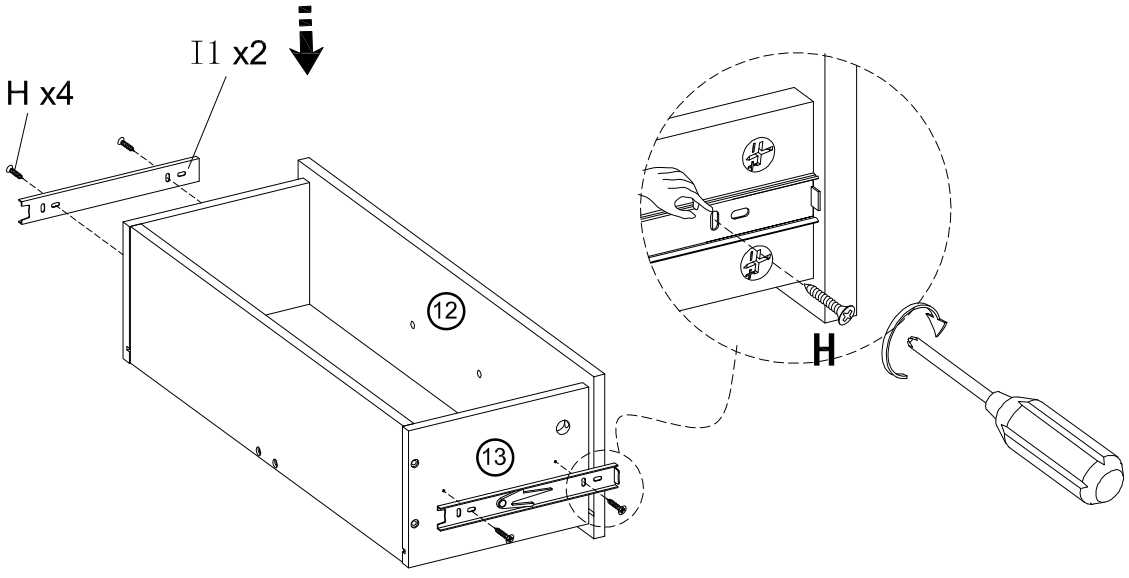

5



I2x2



Hx4

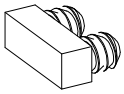

Mx4

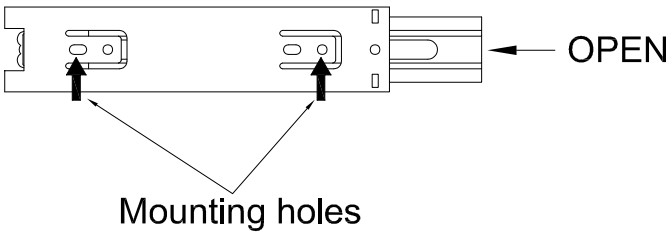

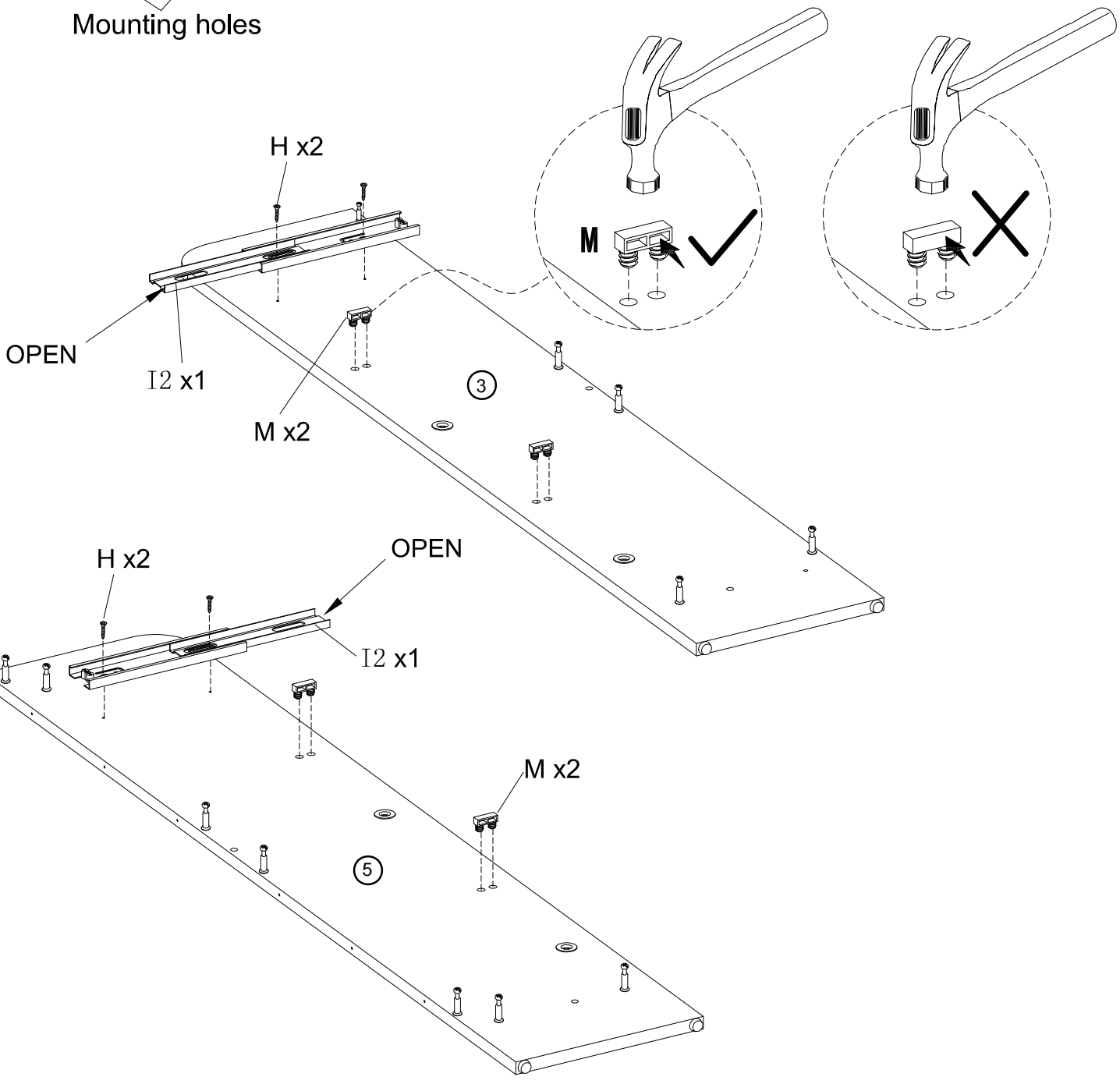

6


I2x2


Hx4

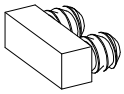
Mx4

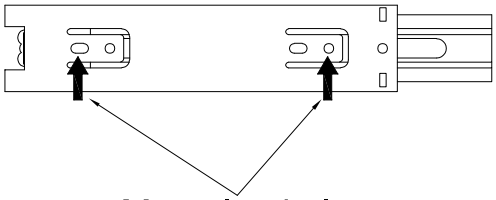

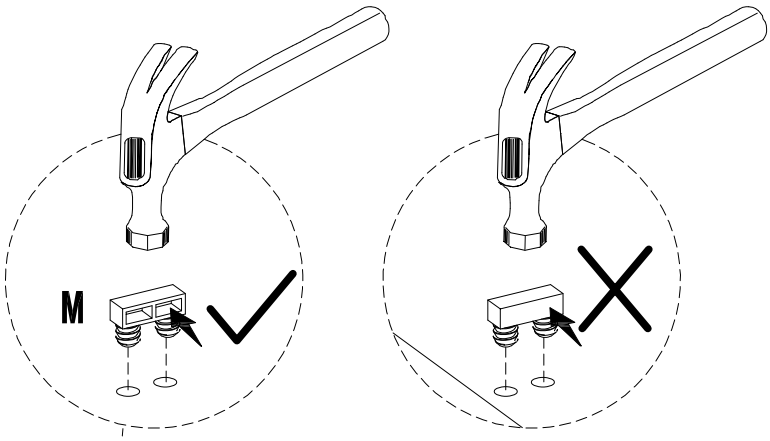

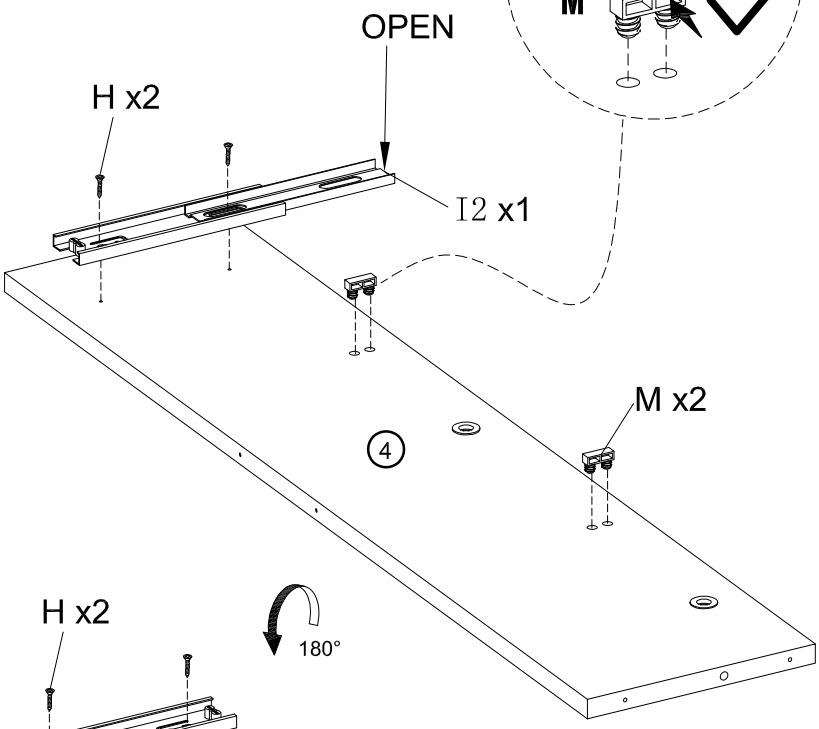

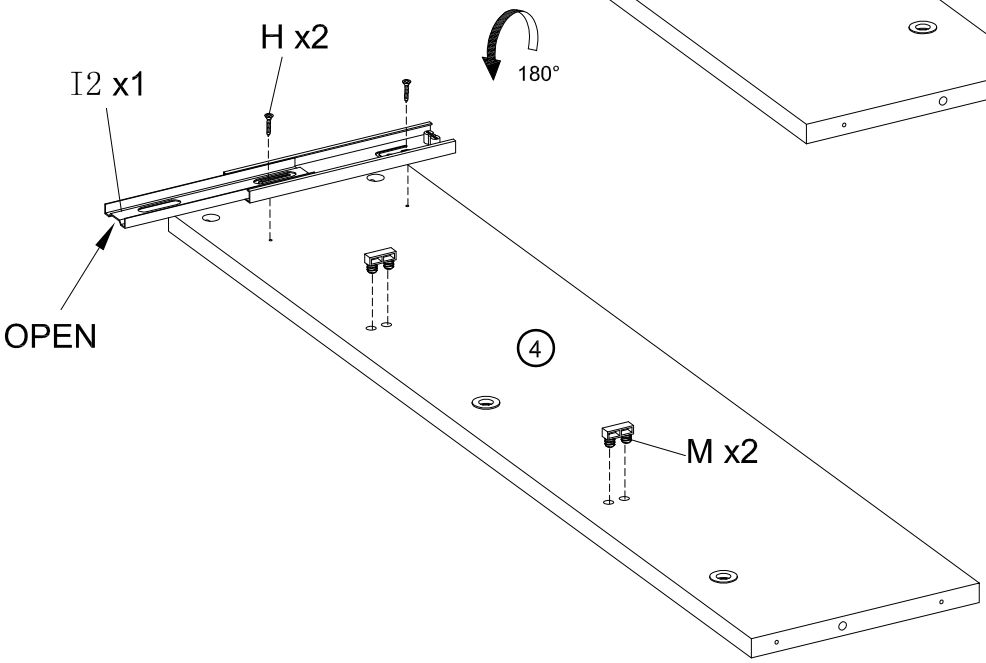

7

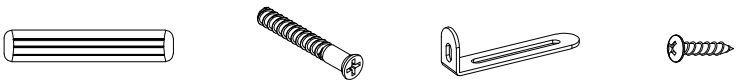

Dx4 Ex8 Rx2 Ux2

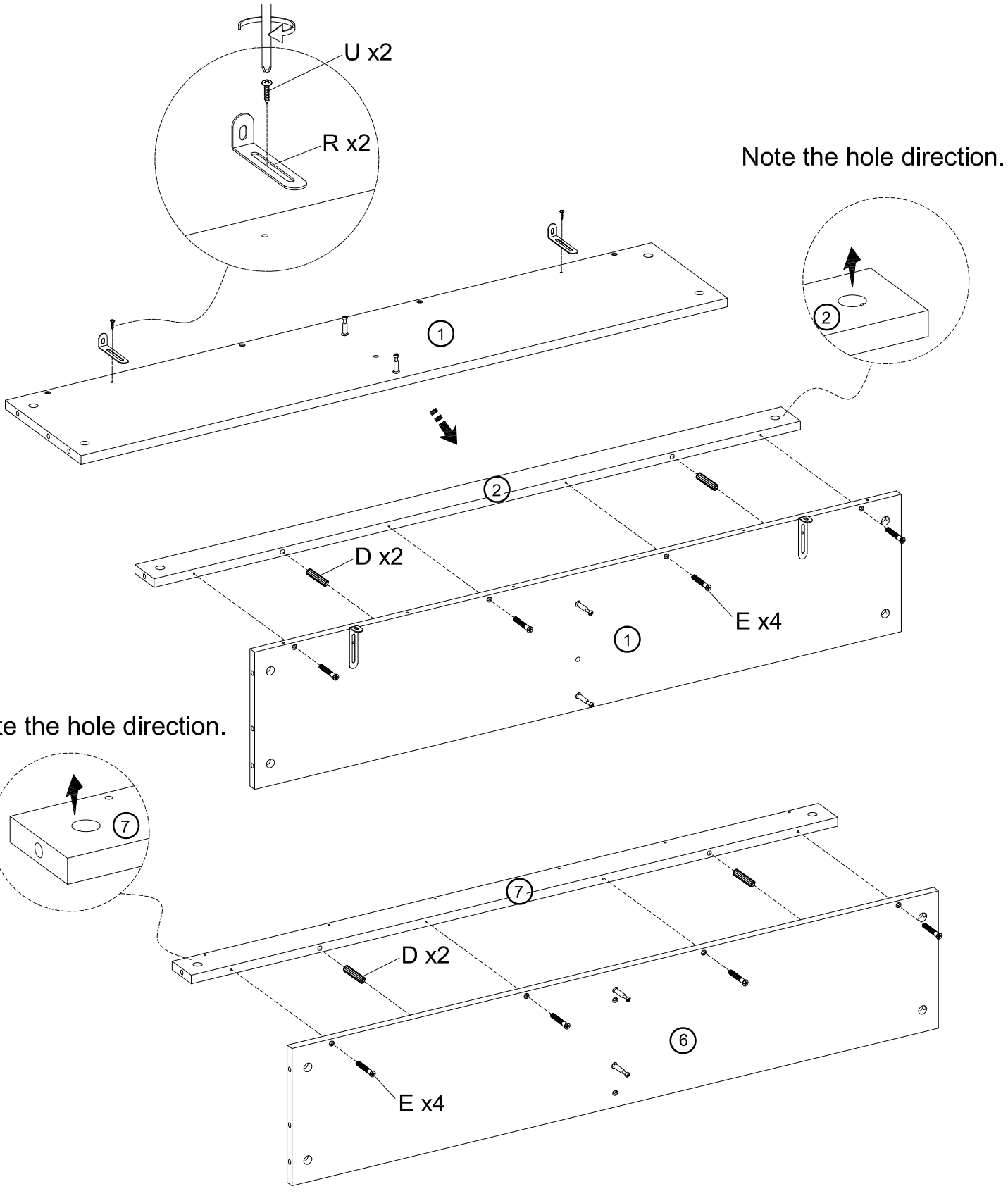

8

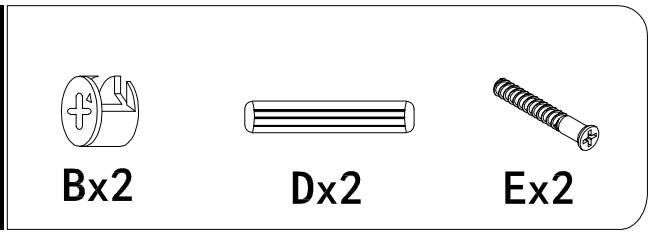

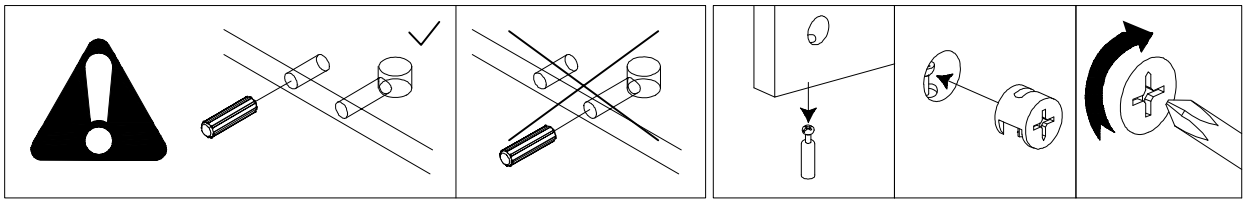

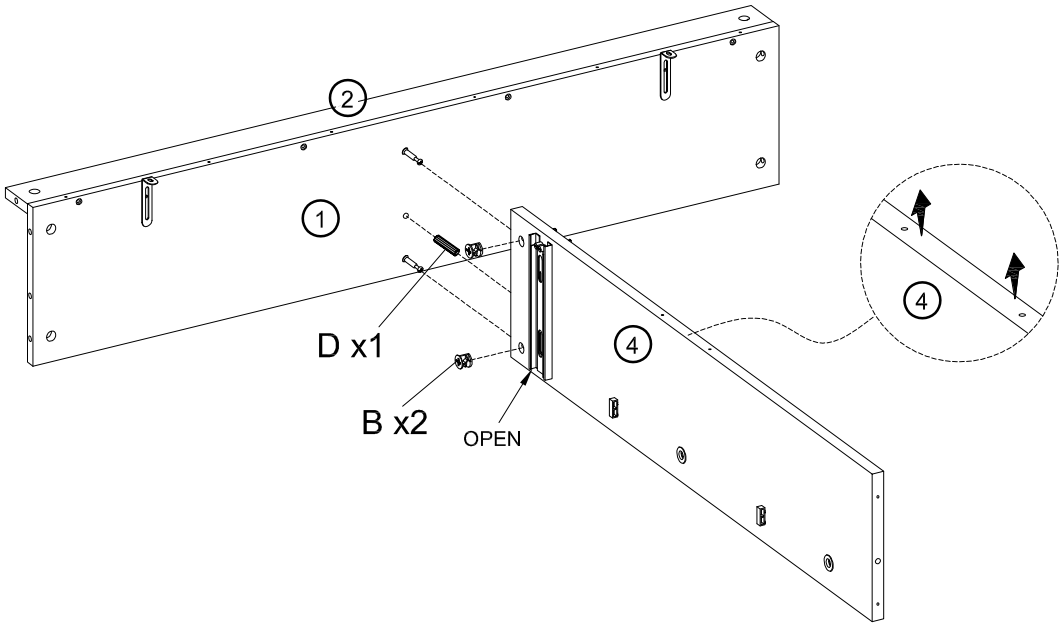

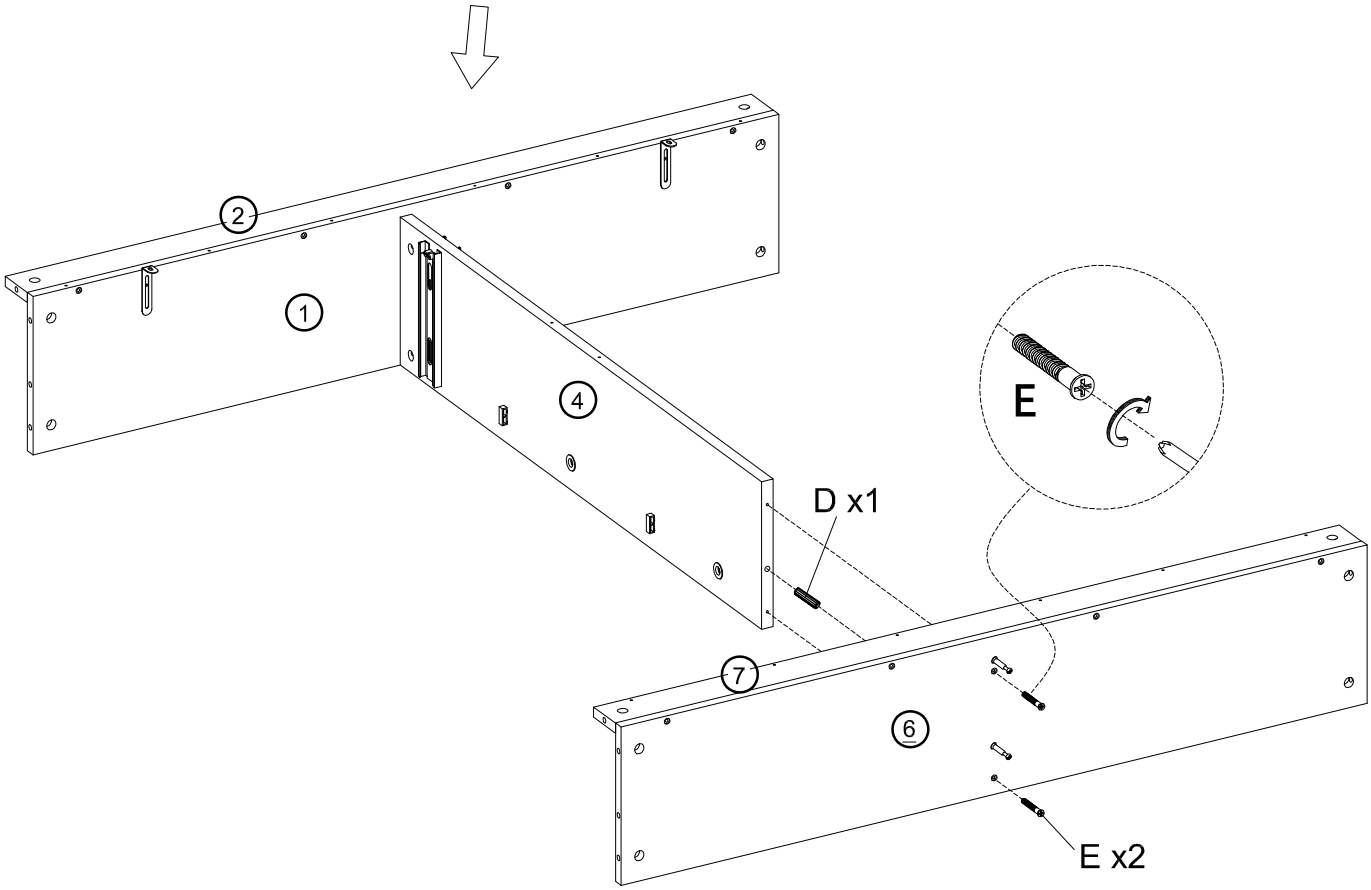

9



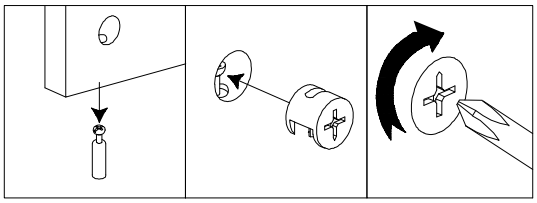

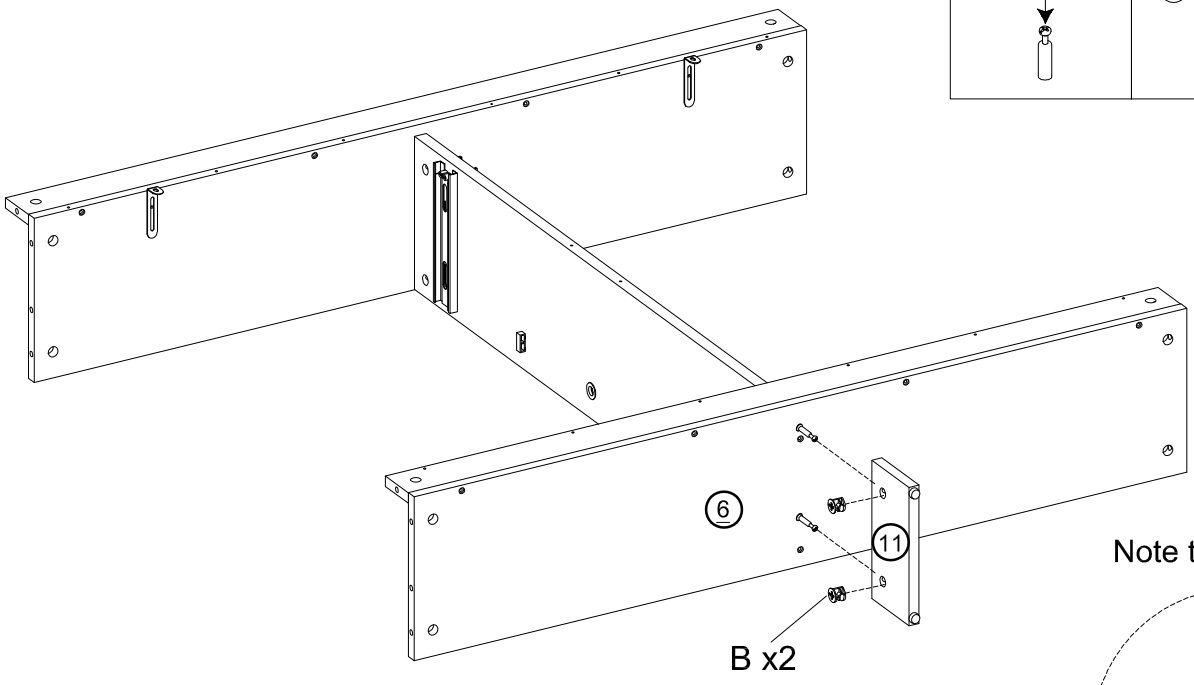

Note the holes direction.

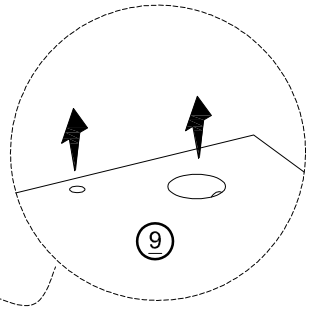

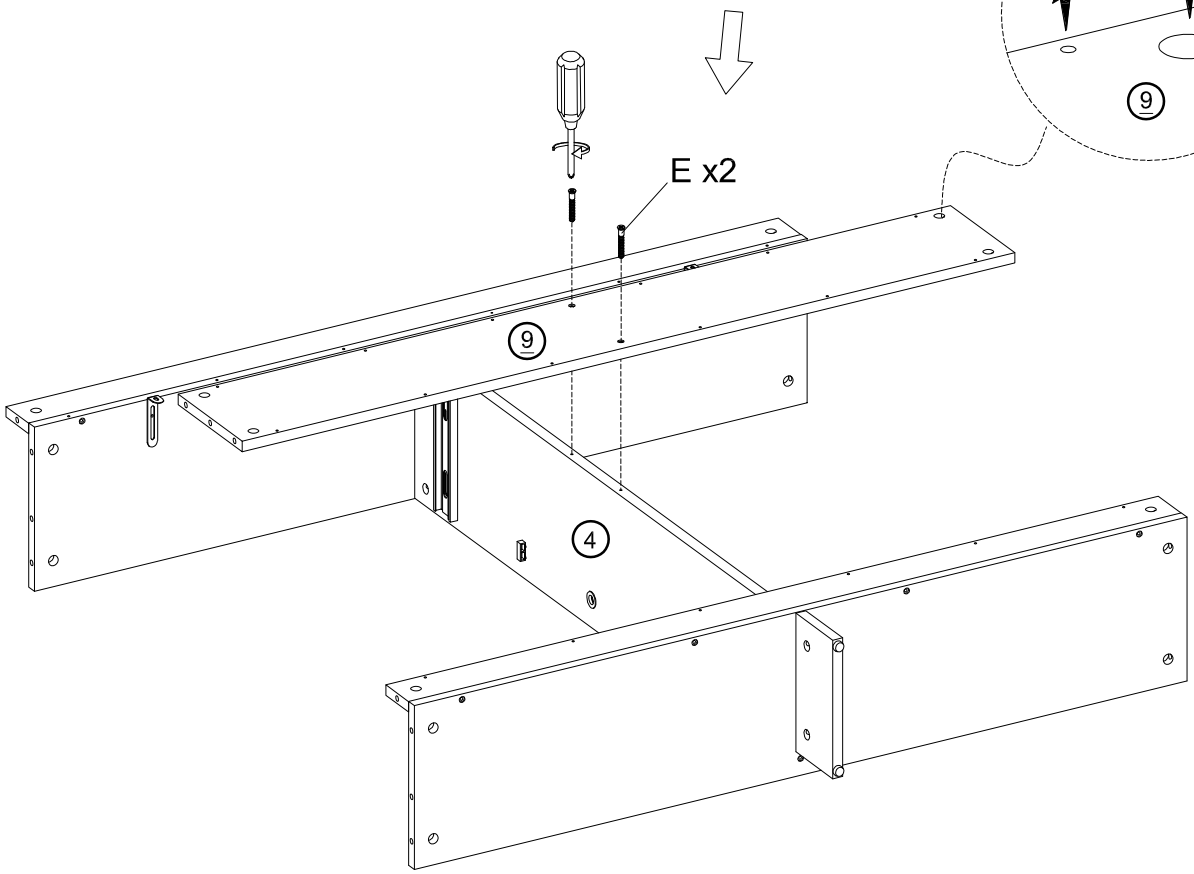

10

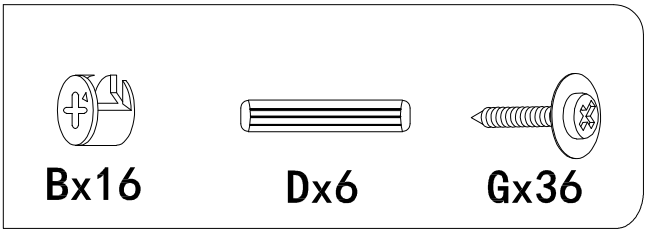

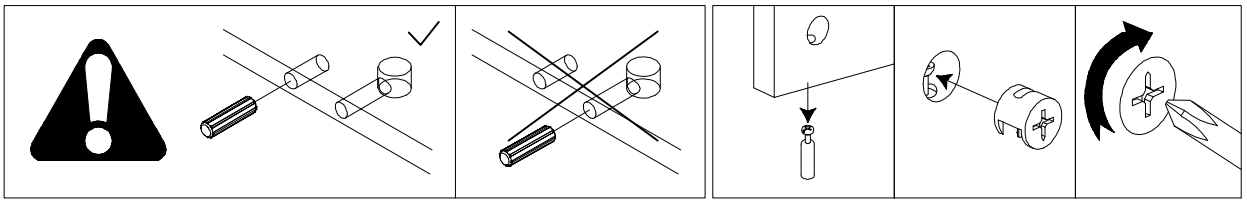

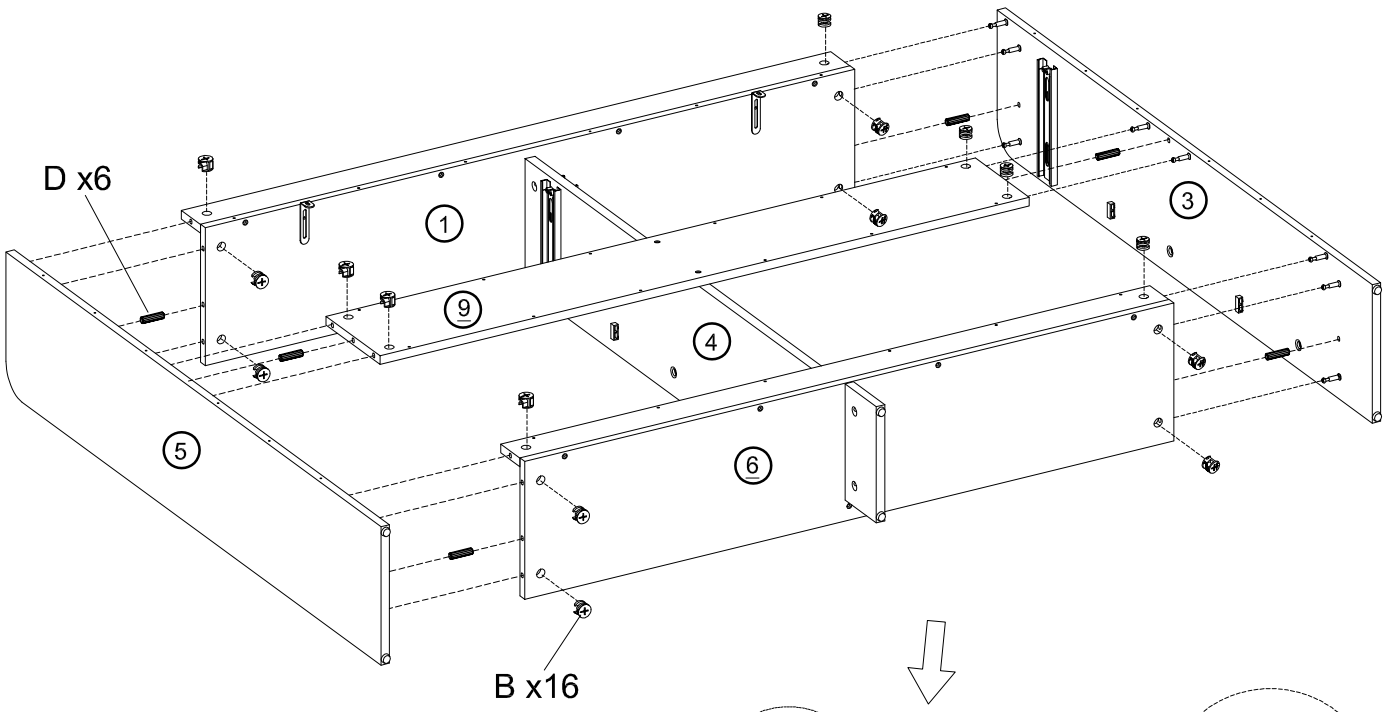

Note the hole direction.

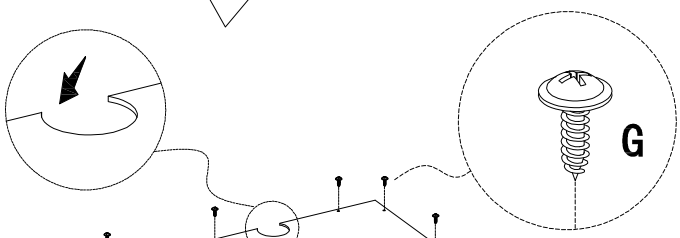

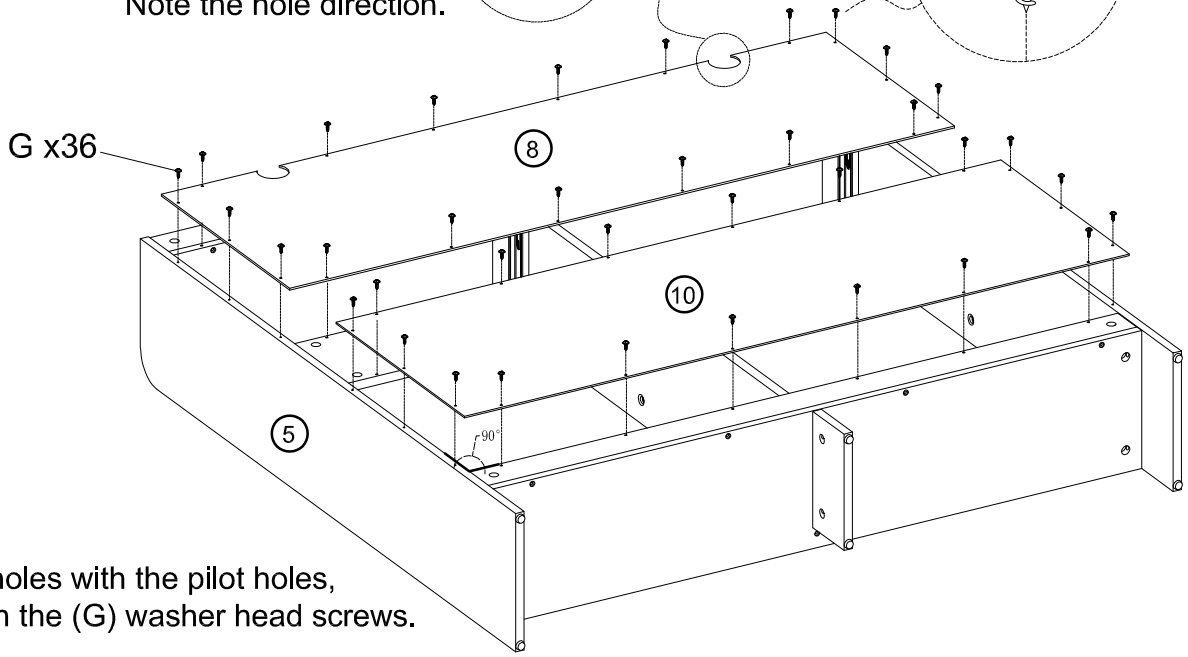

Align the predrilled holes with the pilot holes,
attach it in place with the (G) washer head screws.

11

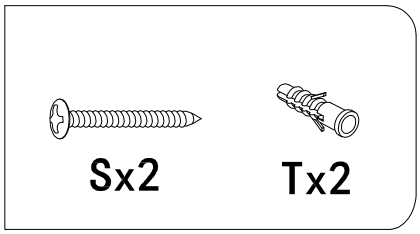

WARNING

Serious or fatal injuries can occur from furniture tipping over. To prevent the furniture from tipping over we recommend that it is permanently fixed to the wall. Wall anchor and hardware are included with this product. Please make sure hardware is suitable for your walls before installing, as different wall materials may require different types of anchors.

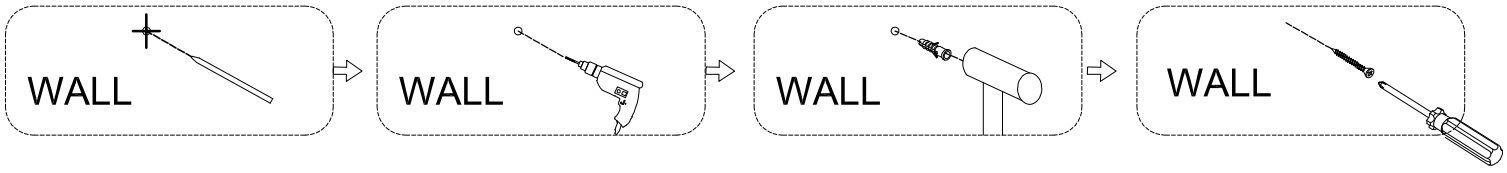

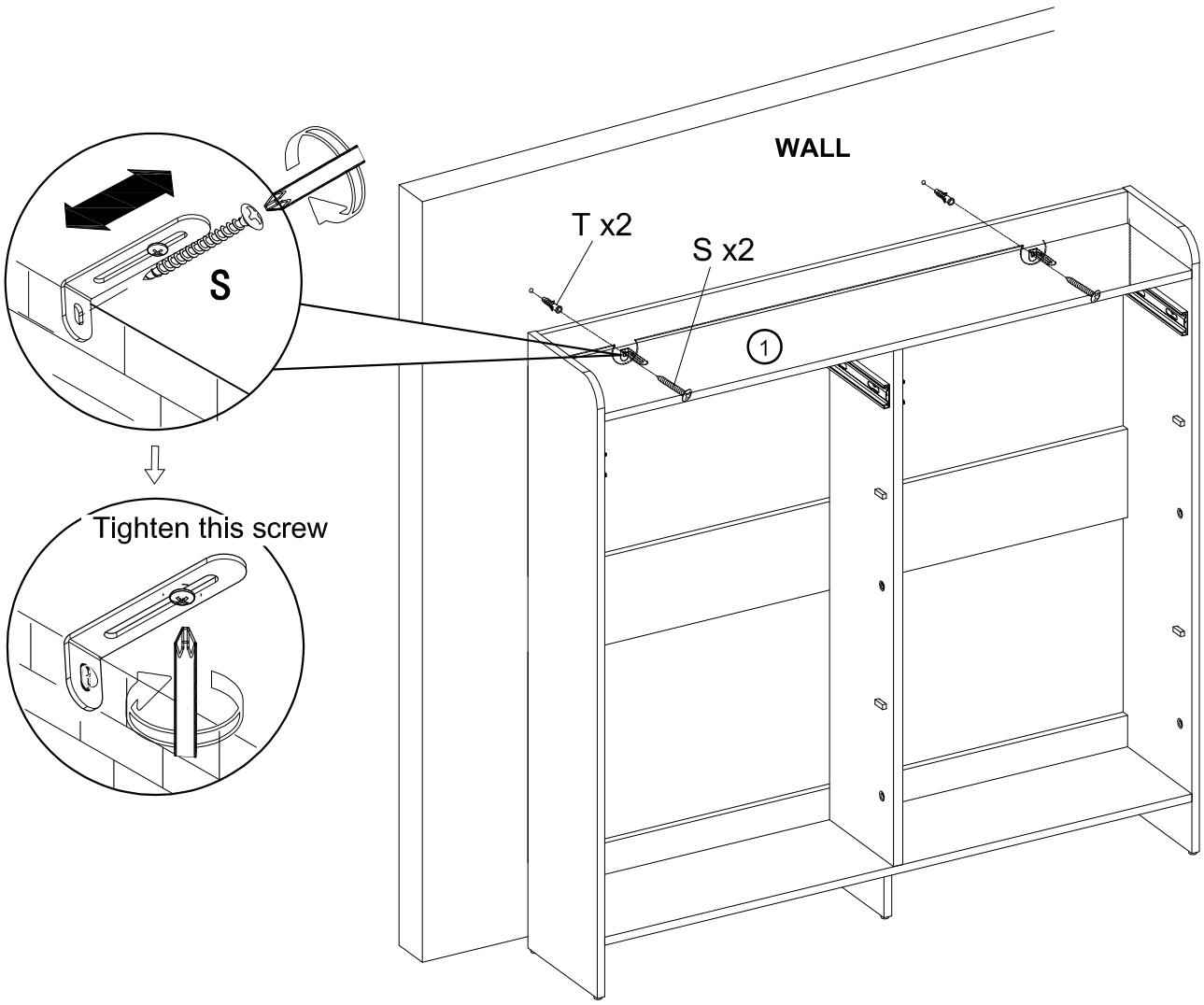

12

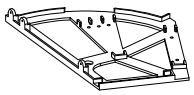

Px4

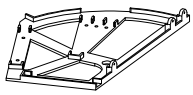

Qx4



Lx40

×4

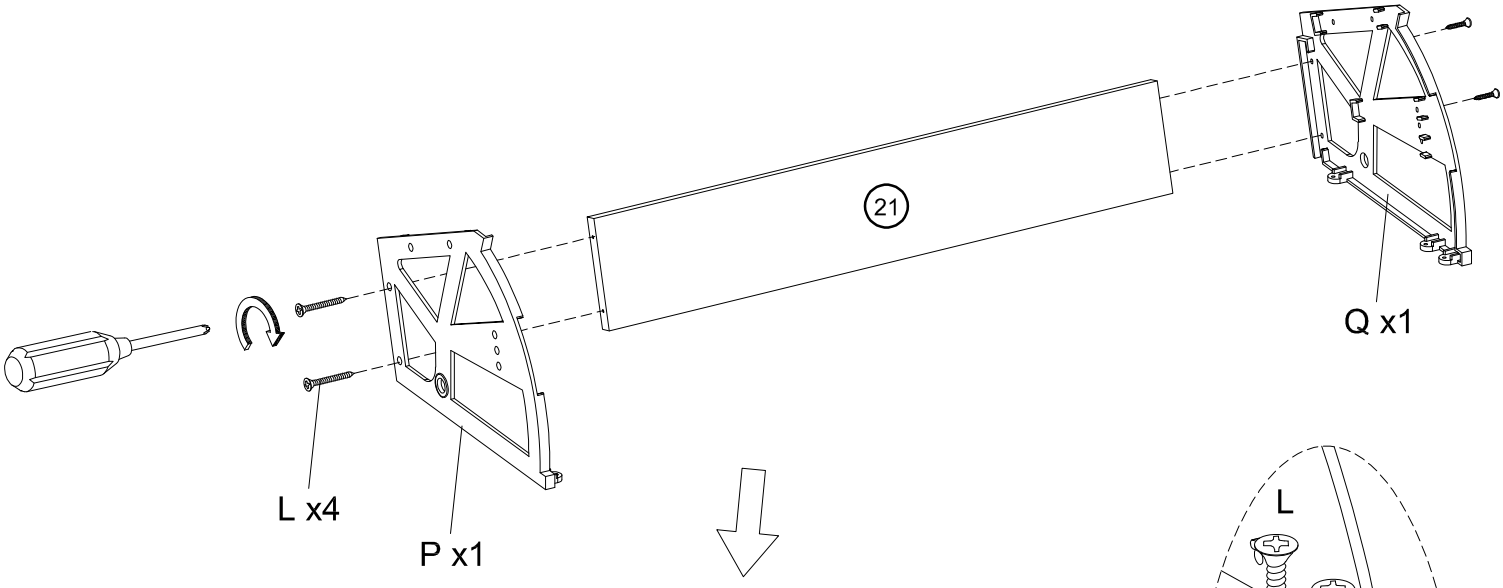

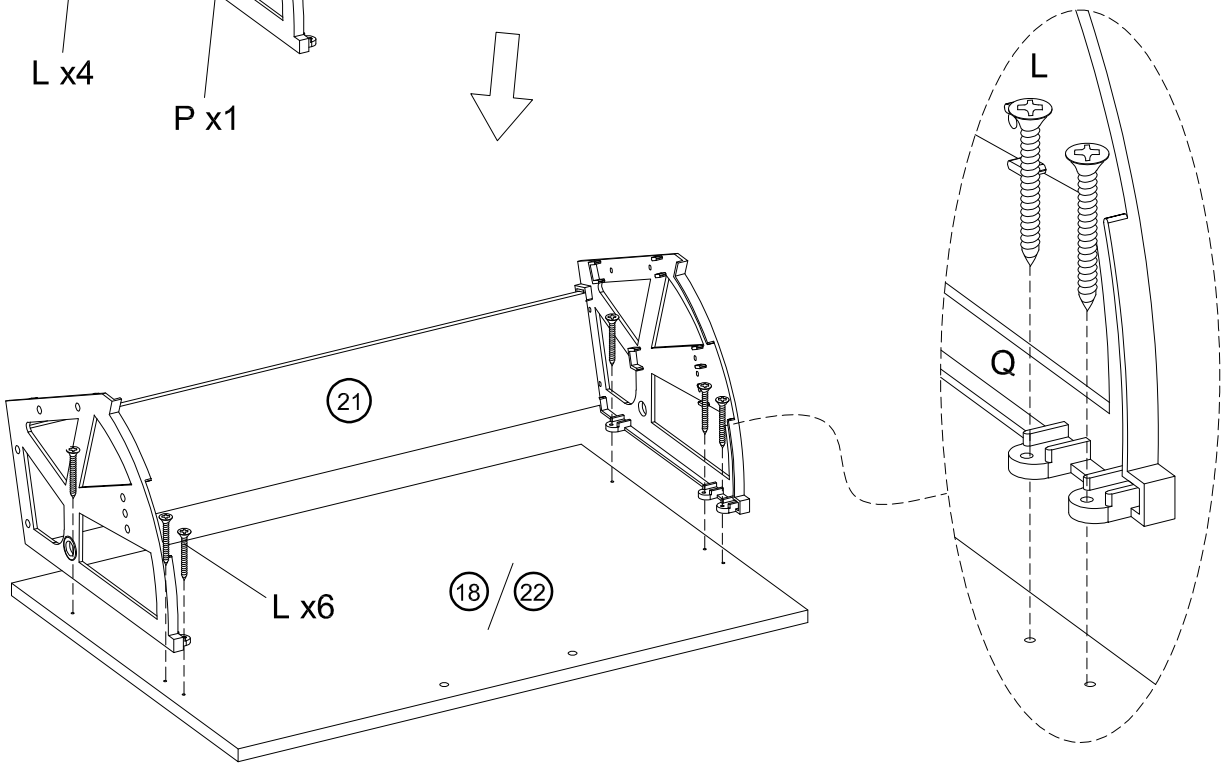

13

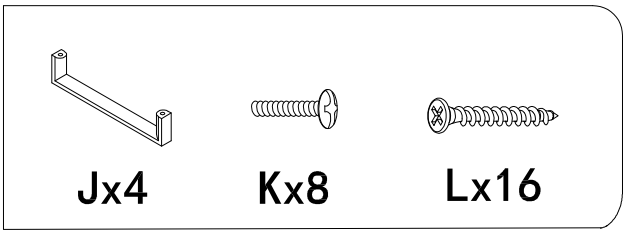

×4

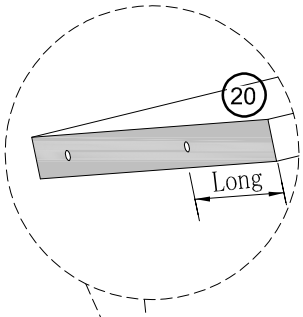

Note the pilot holes direction.

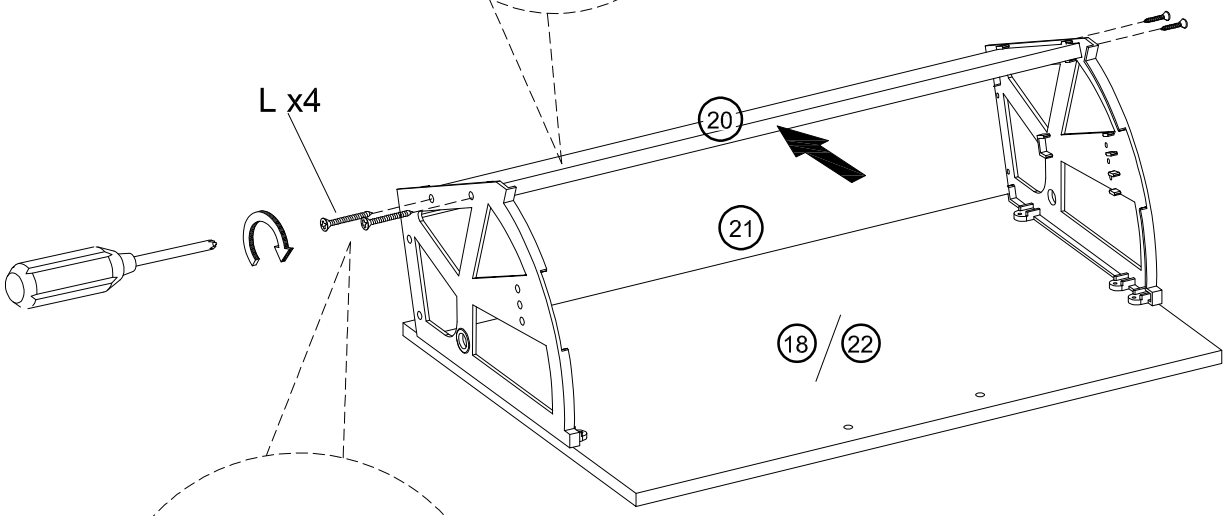

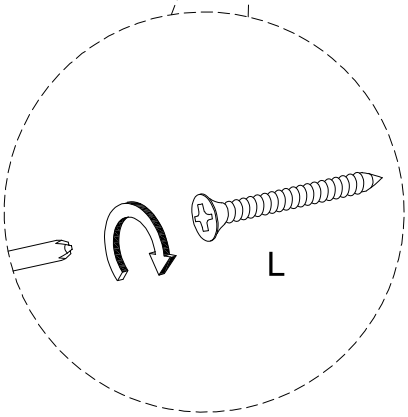

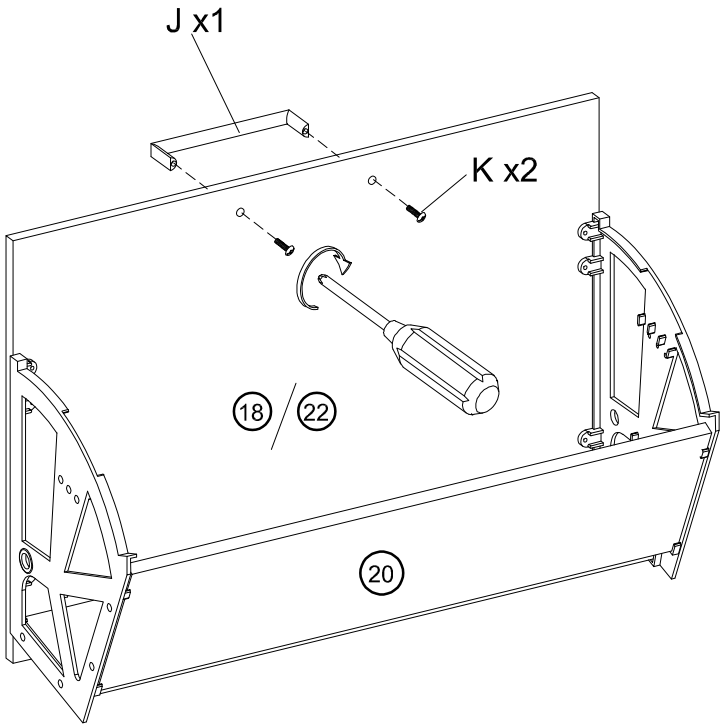

14



Nx4



Ox4

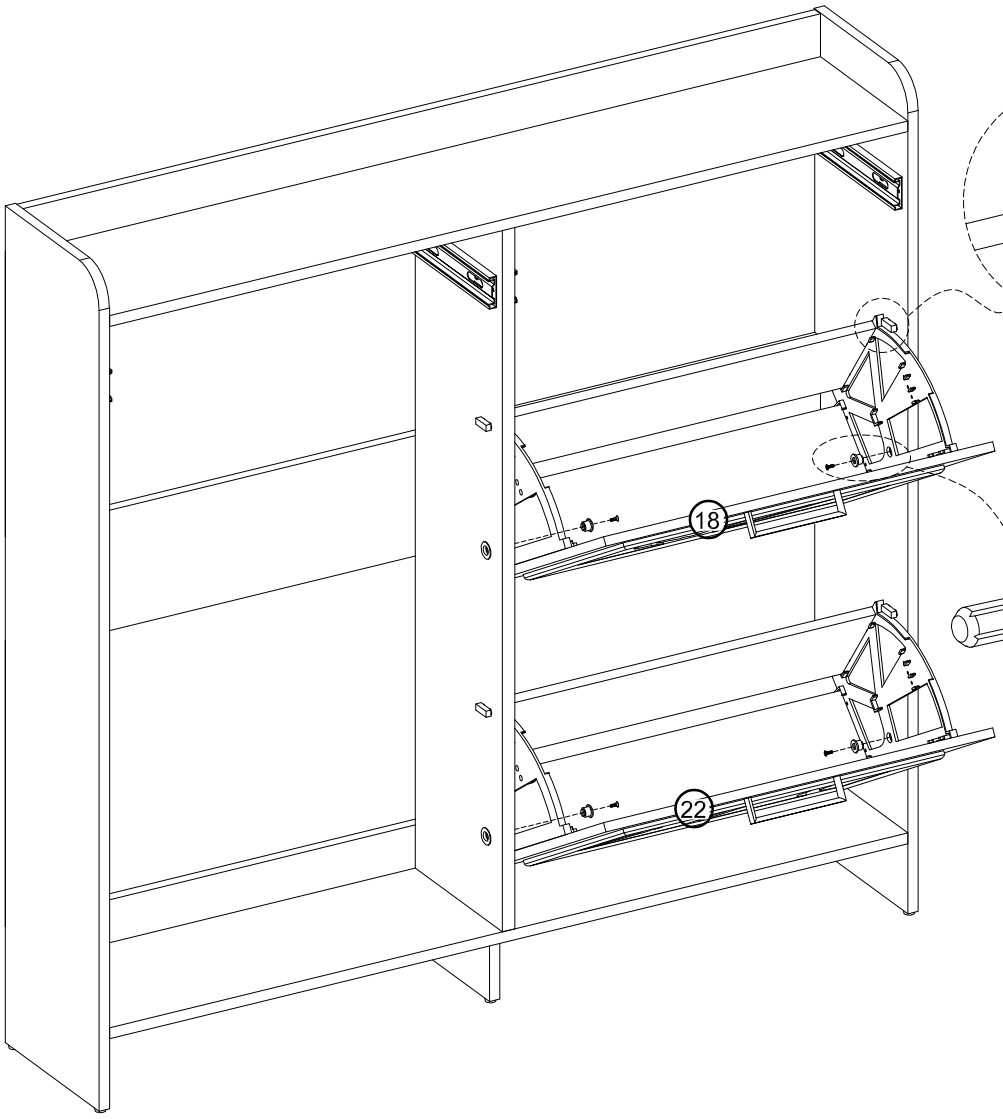
18
22

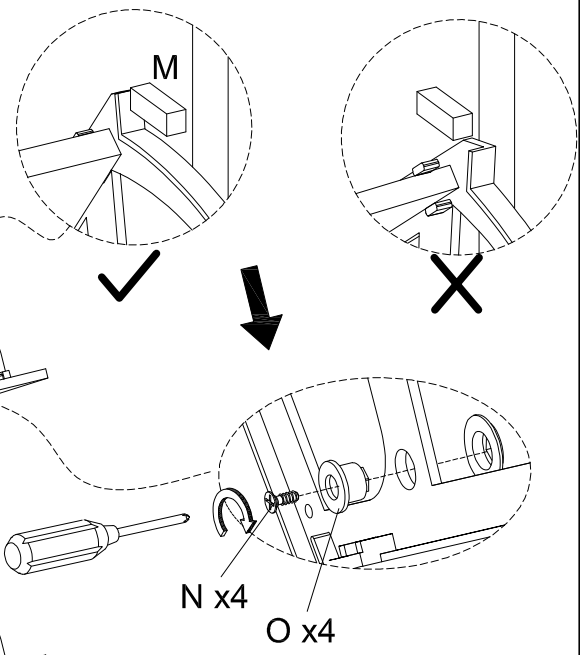
M
N x4
O x4


CAUTION:Heavy! You may need assistance with this step.

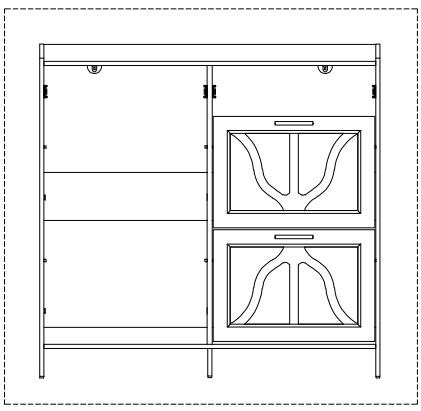

15



Nx4

Ox4

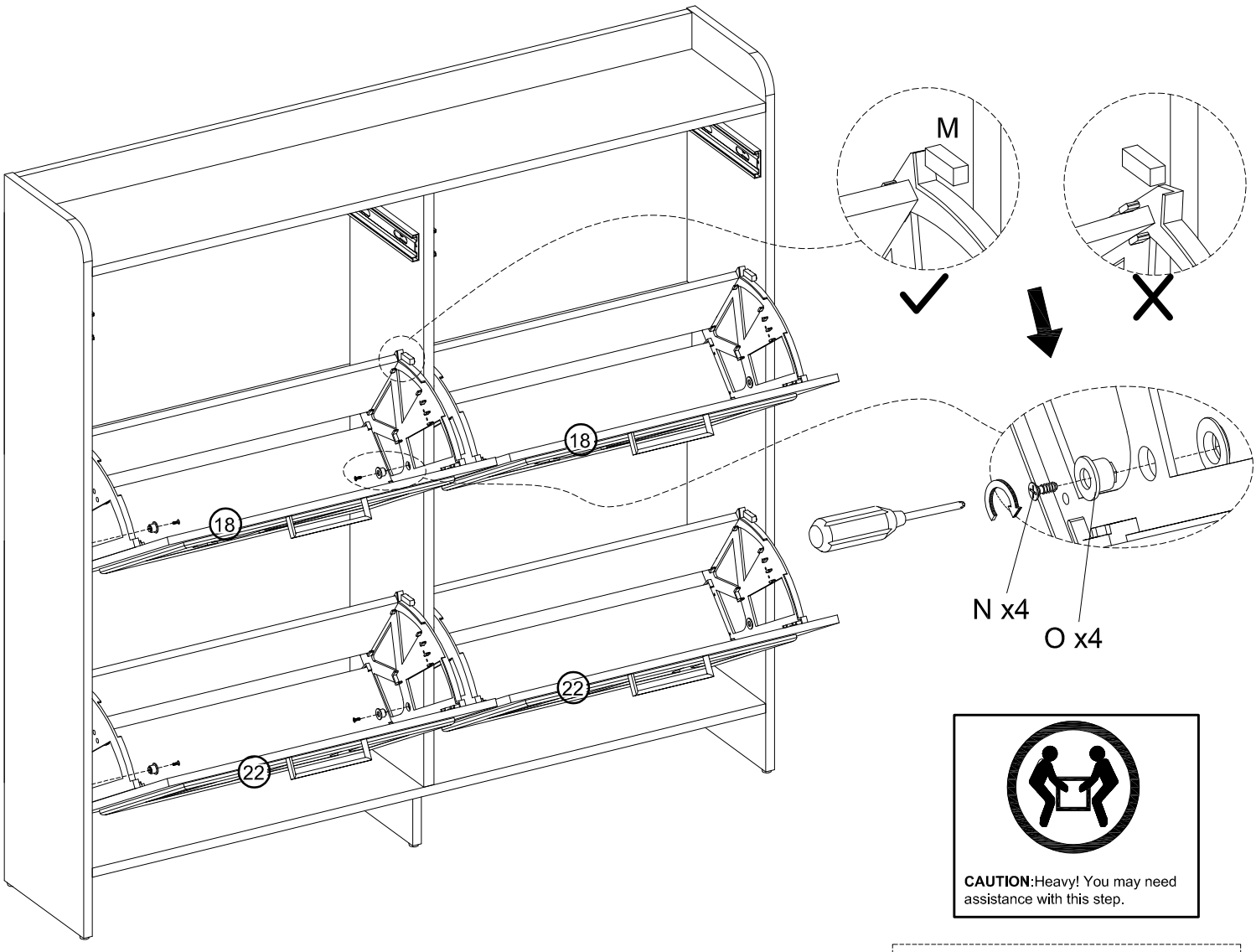

CAUTION:Heavy! You may need assistance with this step.

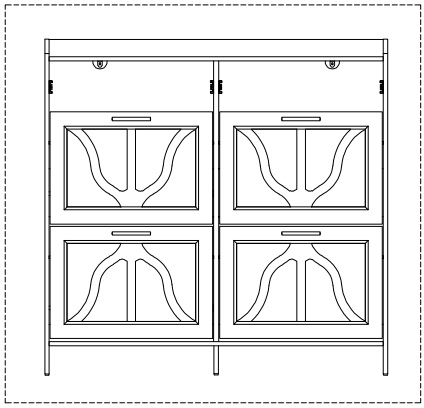

16

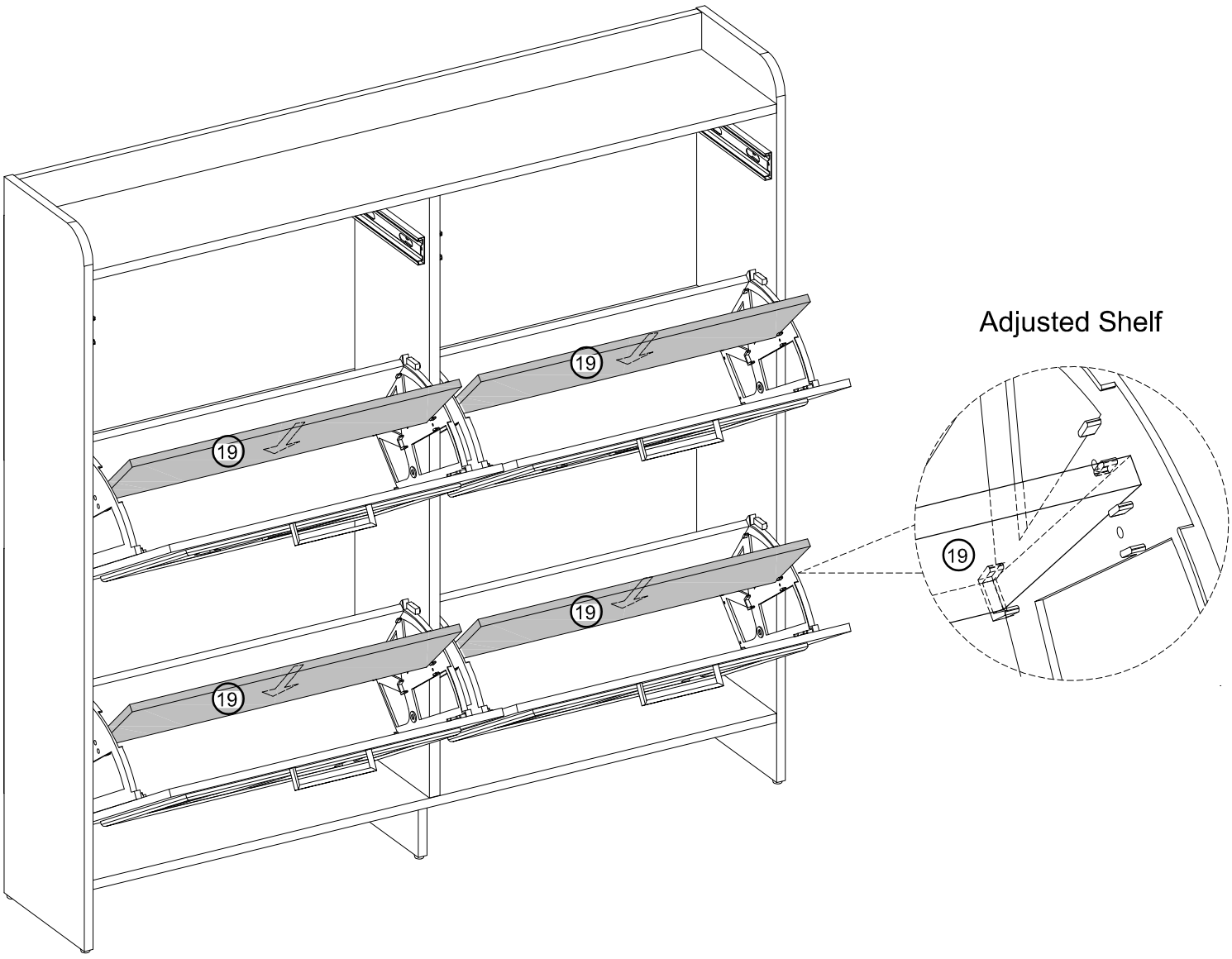

17

Cx30

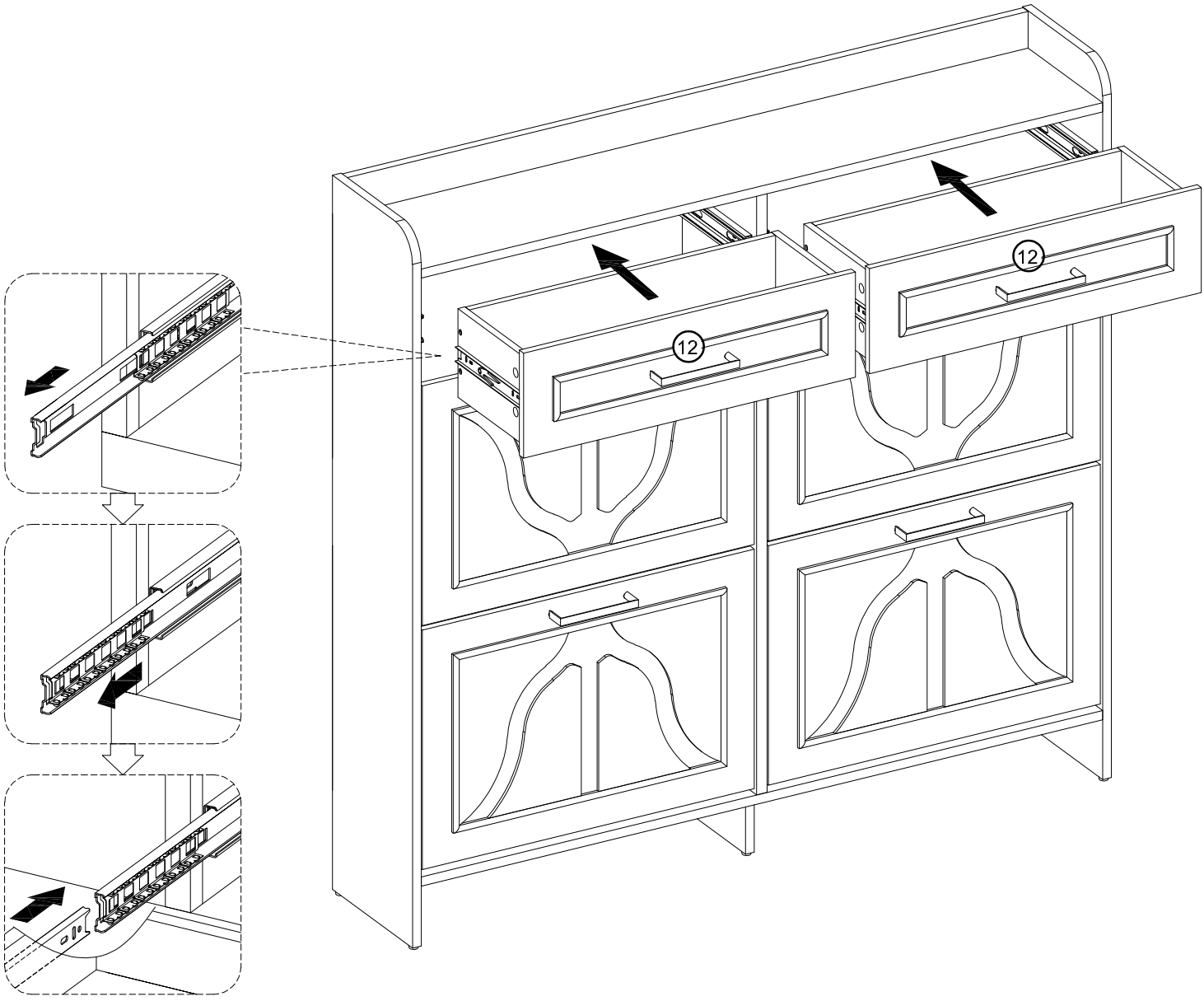

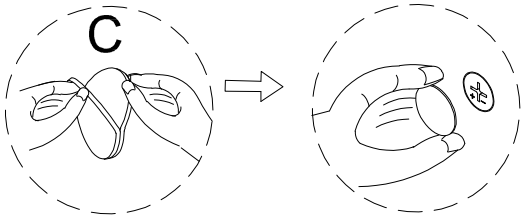

· Stick stickers (C) on cam locks (B).

Installation Completed