Assembly Instructions

Helo Queen Bed

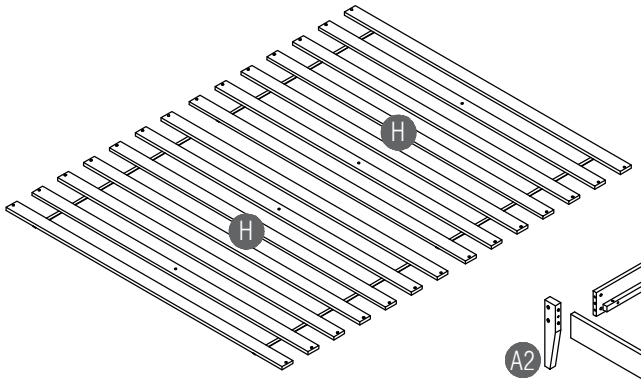

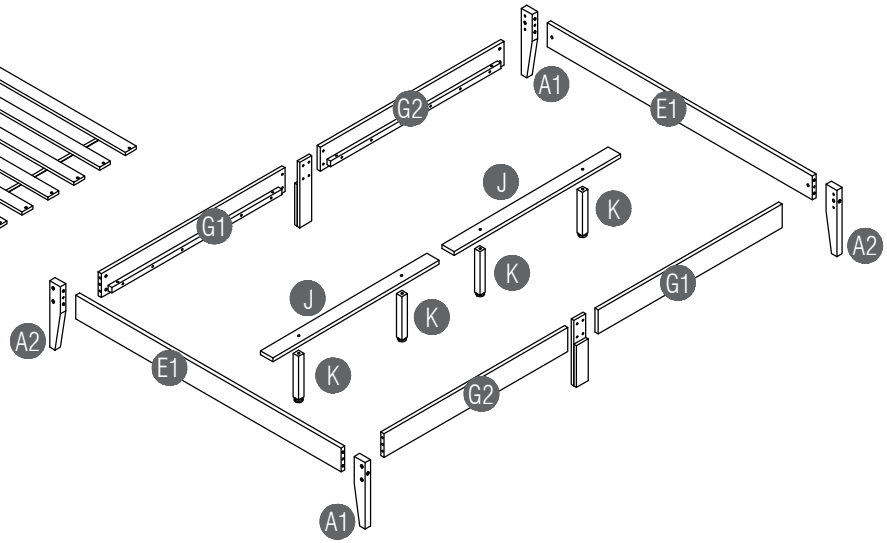

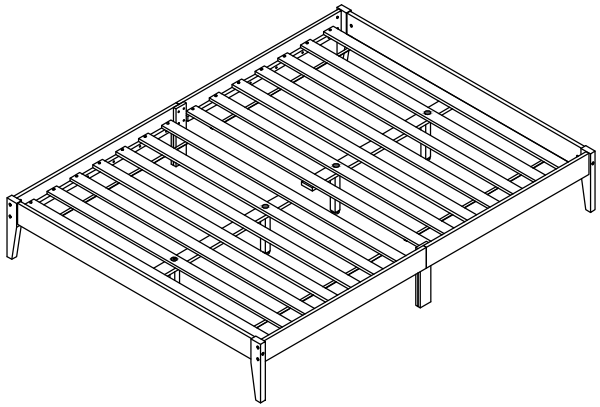

Hardware List

1.	JCBC M6 x 100mm		x 4
2.	M6 x 15mm Barrel Nut		x 12
3.	Wood Dowel M10 x 30mm		x 12
4.	JCBC M6 x 80mm		x 8
5.	M6 Flat Washer		x 8
6.	JCBC M6 x 30mm		x 8
7.	JCBC - W M6 x 30mm		x 8
8.	CSK Screw M4 x 25mm		x 20
9.	JCBB M8 x 80mm		x 4
10.	M8 Flat Washer		x 4
11.	Adjustable Screw		x 4
12.	M4 Allen Key		x 1
13.	M5 Allen Key		x 1

Tool required for assembly :

* Allen Key (supplied)
* Phillips Screwdriver (not supplied)

ASSEMBLY TIPS

Remove hardware from box and sort by size to check that all hardware and parts are present before assembling. Follow instructions below in the proper sequence to ensure fast, easy and correct assembly.

⚠ **WARNING !!**

DO NOT FULLY TIGHTEN ALL BOLTS UNTIL ALL PARTS ARE IN PLACE. FAILURE TO FOLLOW THIS INSTRUCTION MAY CAUSE THE BOLTS TO BE MISALIGNED DURING THE ASSEMBLY.

NOTE : DURING ASSEMBLY , DO NOT TIGHTEN ANY SCREWS UNTIL THE COMPLETE UNIT HAS BEEN ASSEMBLED.

Thank you for purchasing this quality product. Be sure to check all packed material carefully for small parts which may have come loose inside the carton during shipment. Place all parts on a clean , smooth surface such as a rug or carpet to avoid scratching the parts. Be sure you have all the parts and hardware before you begin assembly.

1 Assemble the Head & Foot Post (A1)&(A2) to Hb. Panel (E1).

1.	JCBC M6 x 100mm	x 4
2.	M6 x 15mm Barrel Nut	x 4
3.	Wood Dowel M10 x 30mm	x 8

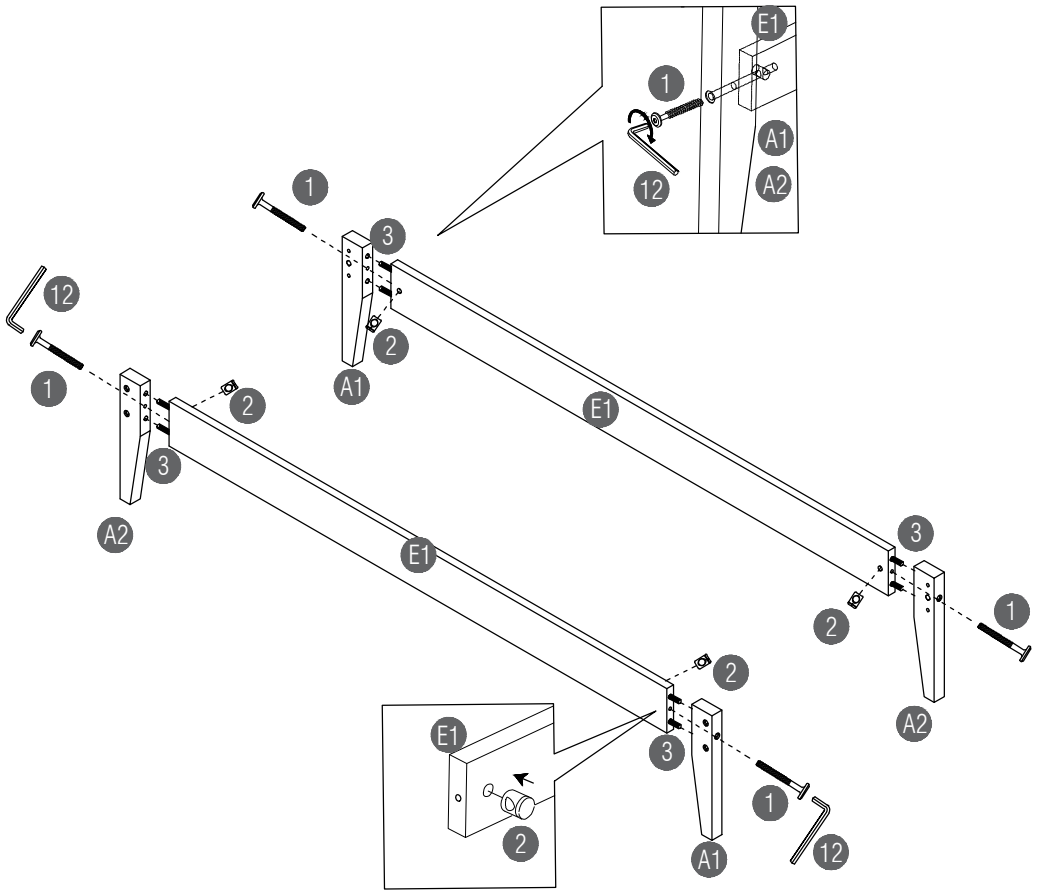

2 Assemble the Side Rail (G1)&(G2) to Side Rail Support (F).

5.	M6 Flat Washer	x 8
6.	JCBC M6 x 30mm	x 8

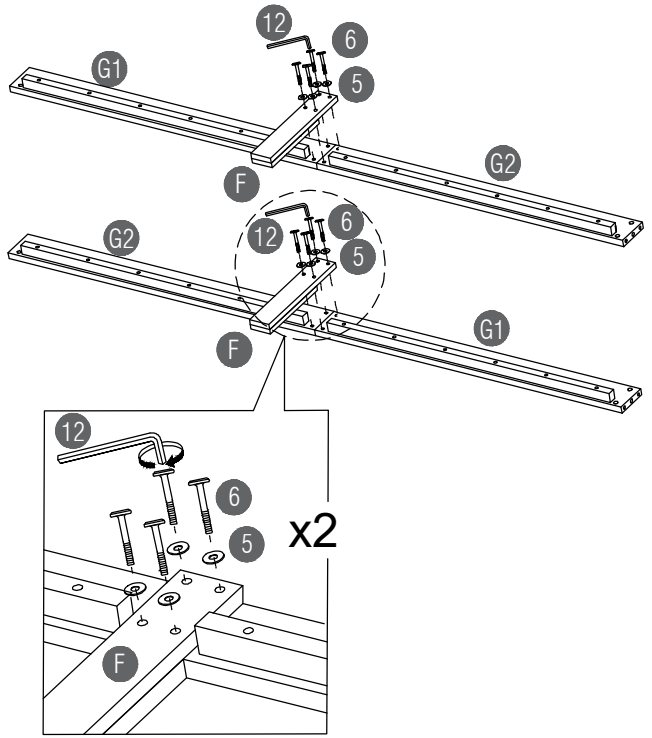

Assembly Instructions

Helo Queen Bed

3 Attach the Side Rails to the Headboard and Footboard.

2.	M6 x 15mm Barrel Nut	x 8
3.	Wood Dowel M10 x 30mm	x 4
4.	JCBC M6 x 80mm	x 8

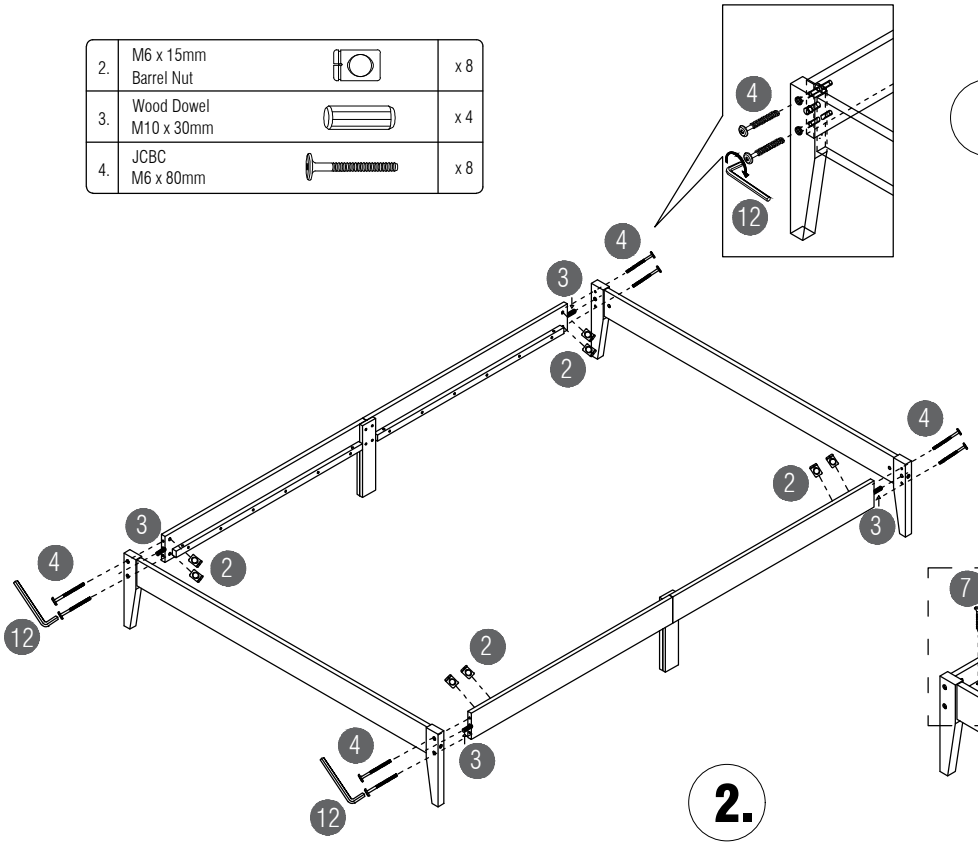

2.

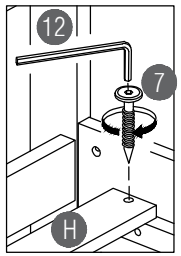

4 Lock the Support Legs (K) on Slats (H) & Center Rail (J).
Please Note that the Hex Nut or Support Legs (K) have Adjuster (11) at Bottom.
Unscrew to Adjust if nesessary. Assemble the Slats (H) to the Bed.

1.

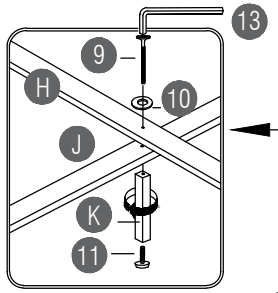

7.	JCBC - W M6 x 30mm	x 8
8.	CSK M4 x 25mm	x 20
9.	JCBB M8 x 80mm	x 4
10.	M8 Flat Washer	x 4
11.	Adjustable Screw	x 4

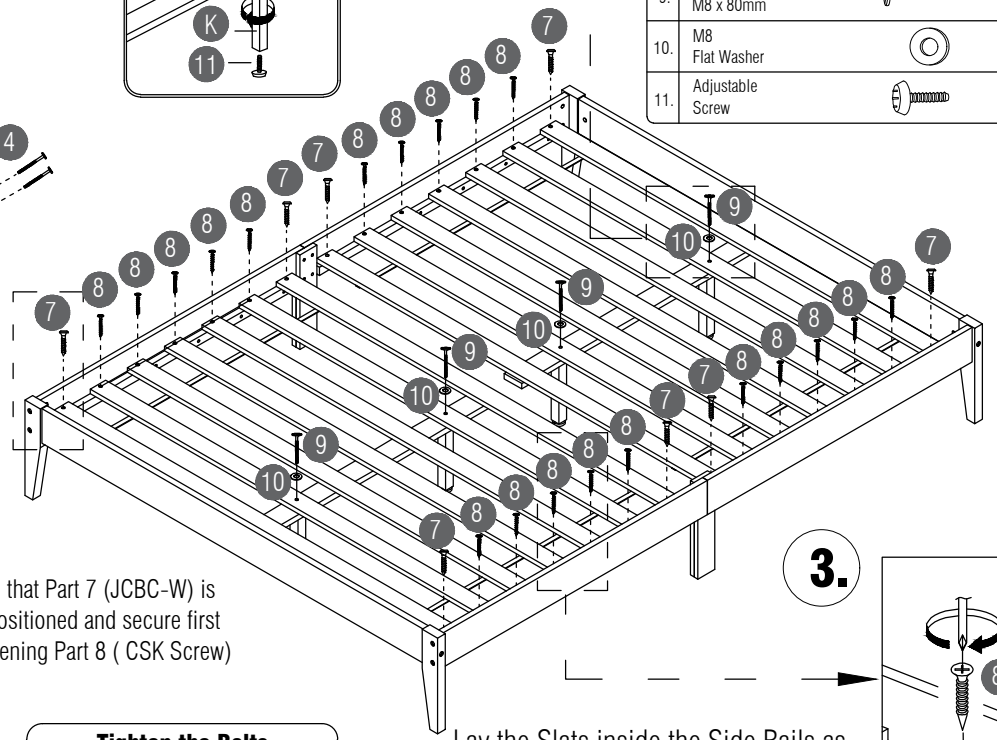

***Ensure that Part 7 (JCBC-W) is properly positioned and secure first before fastening Part 8 (CSK Screw)

Tighten the Bolts.
When everything is put together tighten all the Bolts.

3.

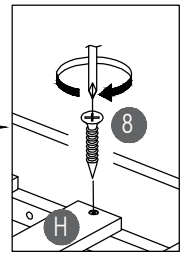

Lay the Slats inside the Side Rails as shown below,and fix in place with 25mm Csk Screws (total 20)