ASSEMBLY INSTRUCTIONS

IMPORTANT
PLEASE READ BEFORE YOU CONTINUE FURTHER

ASSEMBLY PREPARATION

1. Keep the table top inside the carton during leg installation.
2. Refer to the Parts List and Hardware List to ensure all parts and hardware are correct before starting assembly.

SAFETY PRECAUTIONS

1. KEEP ALL HARDWARE PARTS OUT OF REACH OF CHILDREN.
2. DISPOSE OF PLASTIC PACKAGING MATERIALS IMMEDIATELY TO AVOID ANY RISK OF SUFFOCATION TO CHILDREN AND ANIMALS.

TIPS FOR ASSEMBLY

1. Assemble the table while keeping the table top protected inside the carton until all legs are fully installed. Ensure the surrounding carton is fully opened to avoid assembly difficulties.
2. Identify all parts, hardware, and quantities required for each step.
3. Avoid over-tightening any fittings during assembly, as this may cause damage.
4. Use hand tools only. DO NOT USE POWER TOOLS TO ASSEMBLE THIS PRODUCT.
5. Always assemble the product on a flat, level surface.
6. Assembly requires two or more people. Do not attempt to assemble the product alone, as there is a risk of injury.
7. Do not sit or stand on the partially assembled product. Use the product only for its intended purpose.

WARNINGS

1. This product is intended for indoor and household use only, and is not suitable for commercial use.
2. Two people are required to move the table. Do not move it alone or drag the table.
3. Do not stand, sit, or climb on the table.



- DO NOT DRAG THE TABLE
- DO NOT STAND ON THE TABLE

Please make sure you have all these parts before you start.

PART LIST

Ⓐx 1pc 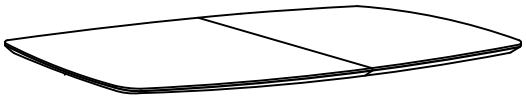	Ⓑx 4pcs 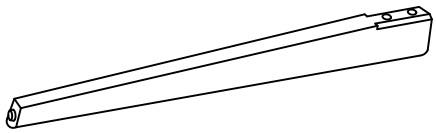

HARDWARE LIST

①x (8pcs +1) 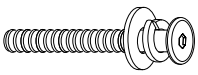 JCBB BOLT M8 X 80MM MS + SW 5/16"+ FW 5/16" X 22MM	②x 1pc  ALLEN KEY M5	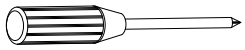 **NOT PROVIDED**
1pc (Extra) 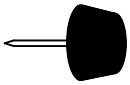 PVC NAIL - 5/8" (WITH PIN)		

(Extra Hardware for spare use)

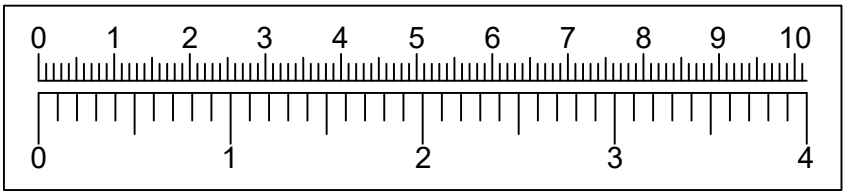

Important Notes Before Assembly:

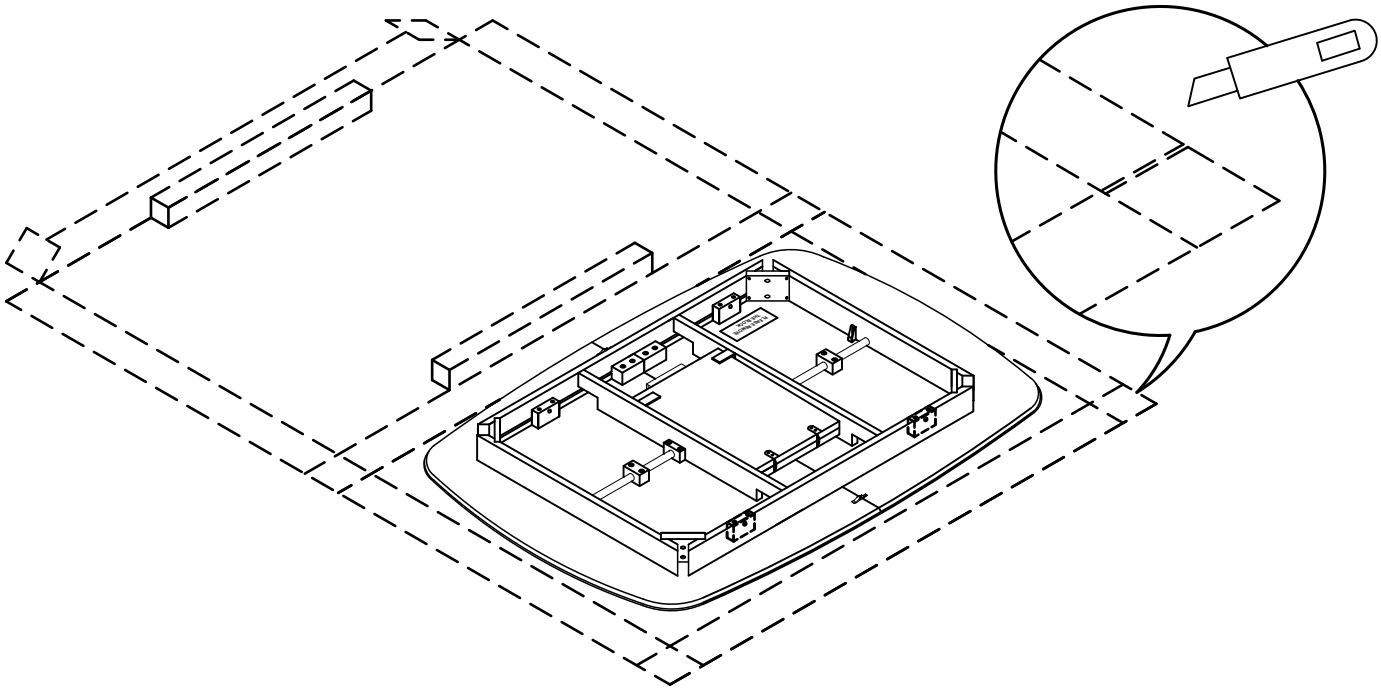

1. **Keep the table top inside the carton during leg installation. Leave the styrofoam protection under the table top to prevent scratches or damage while doing installation.**

2. **Do not place the table top directly on the floor before the legs are installed, as this may cause surface scratches.**

3. **Cut open all 4 corners of the carton completely so the carton can lie flat. This will make the assembly process smoother and easier.**

STEP 1

Note : This is for shipping purpose only, please remove before beginning the assembly.

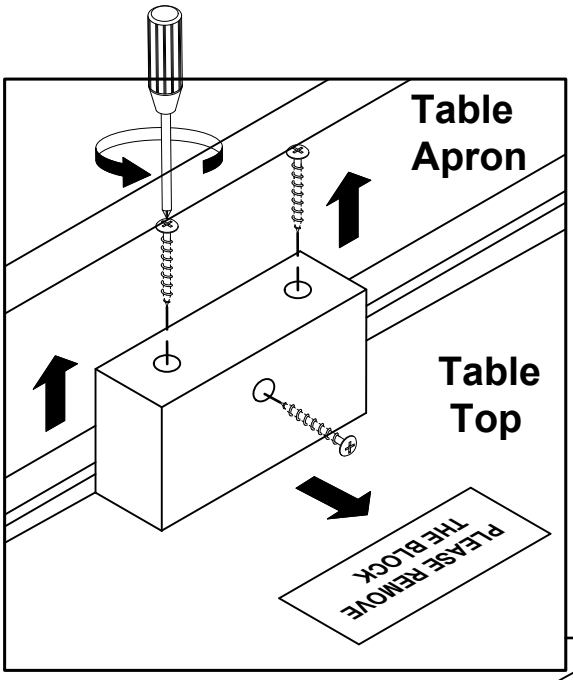

PLEASE REMOVE THE BLOCK

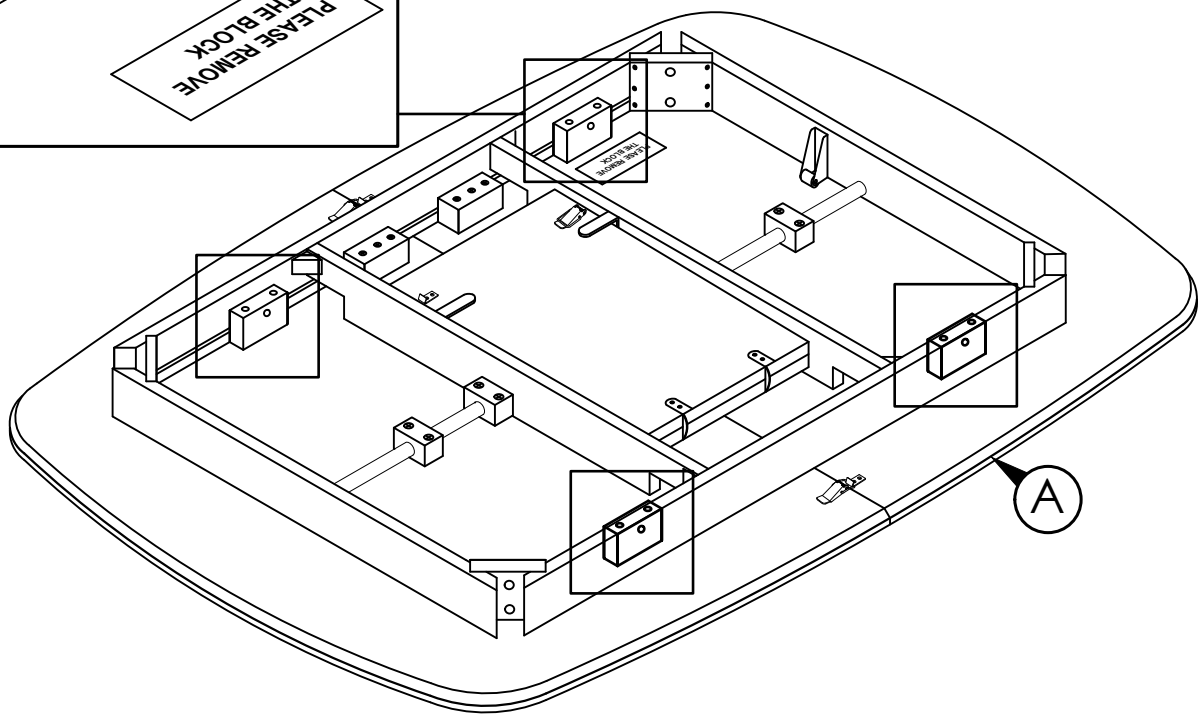

STEP 2

1	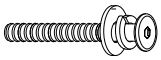 JCBB BOLT M8 x 80mm MS + SW 5/16" + FW 5/16" x 22mm	8PCS

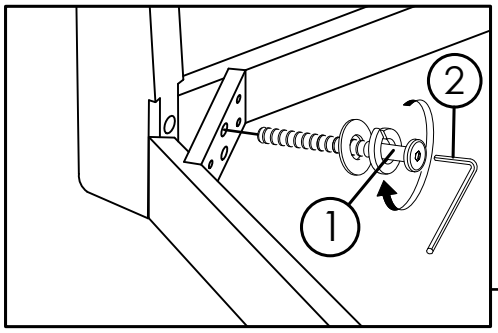

Tighten all bolts slightly loose. Once aligned, fully tighten all bolts but do not over-tighten.

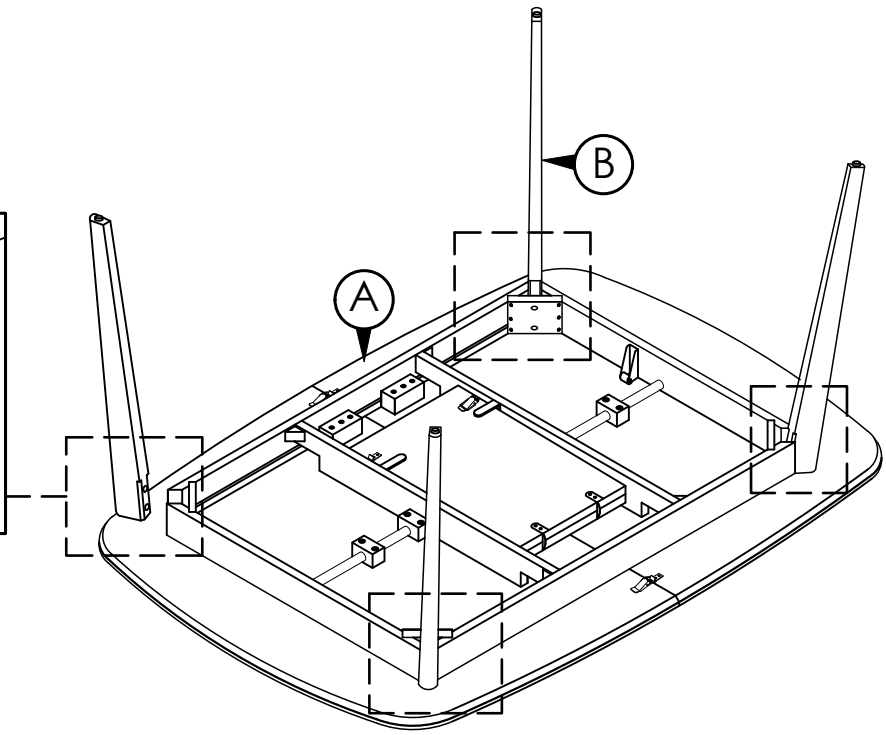

STEP 3

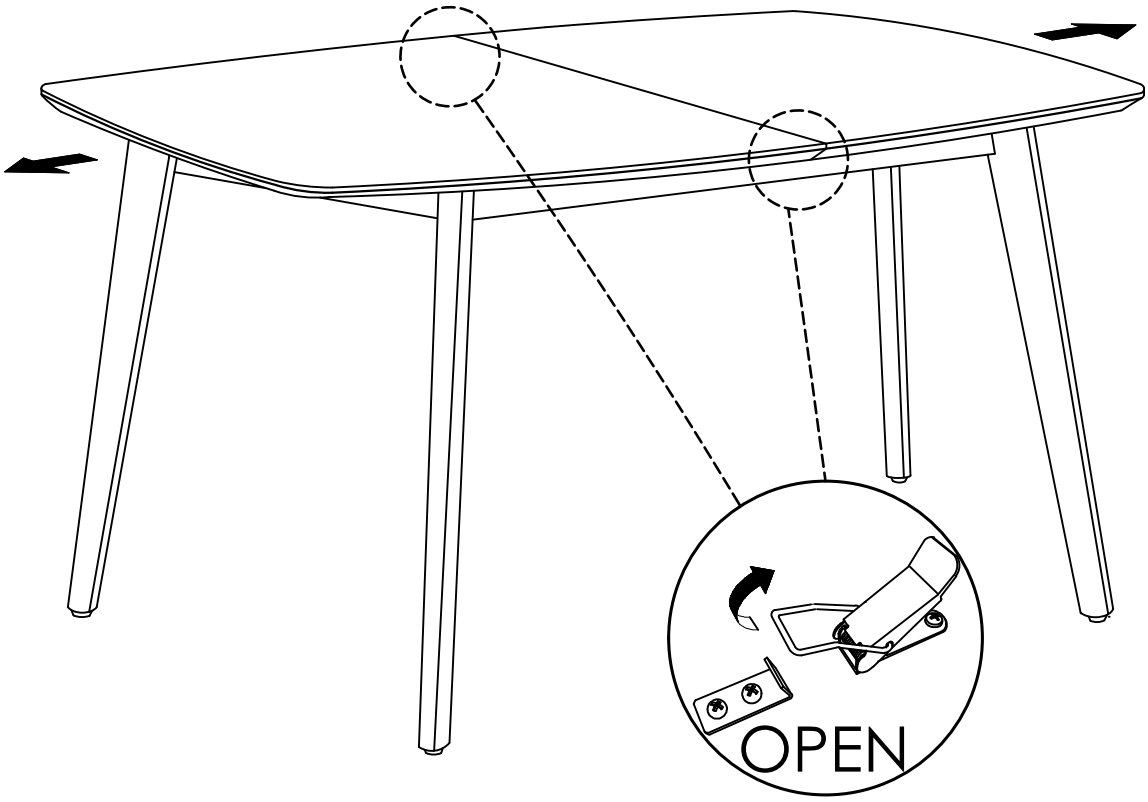

STEP 4

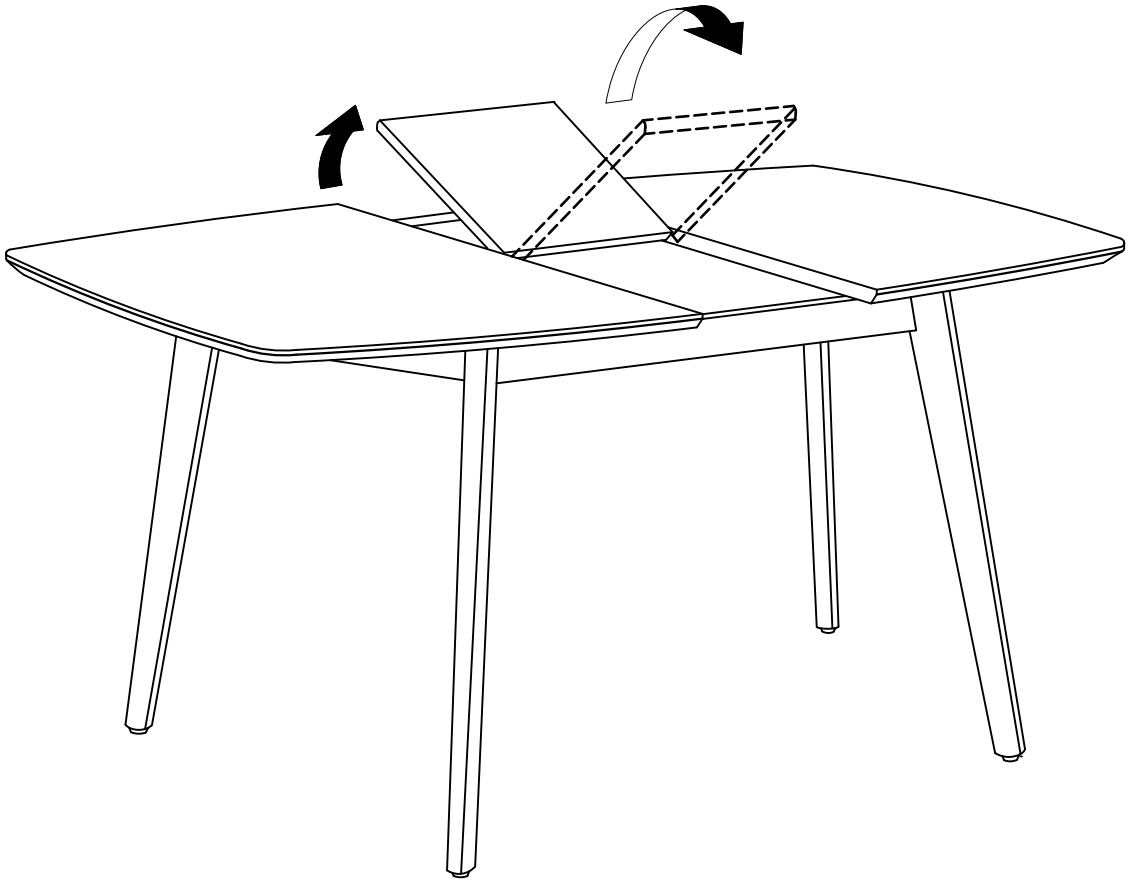

STEP 5

