VEVOR

Upgrade · The Home Creator Way

VINYL FENCE PANELS

Model: TJ-SKU3

VEVOR Support Center

TJ-SKU3

VEVOR
Upgrade·The Home Creator Way

VINYL FENCE PANELS

MODEL:TJ-SKU3

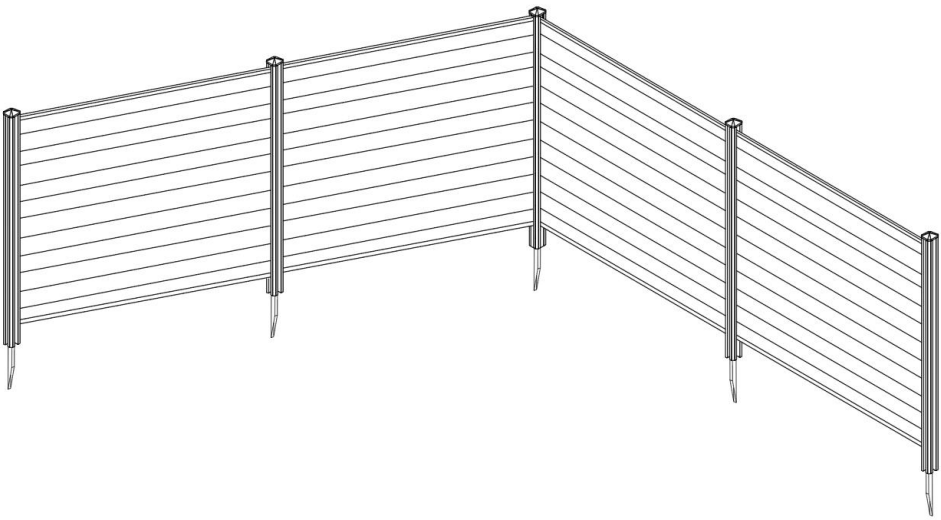

This is the original instruction, please read all manual instructions carefully before operating. VEVOR reserves a clear interpretation of our user manual. The appearance of the product shall be subject to the product you received. Please forgive us that we won't inform you again if there are any technology or software updates on our product.

SAFETY INSTRUCTIONS

WARNING:

1. To ensure your own safety, please make sure to wear gloves while assembling the fence. The metal parts may have sharp edges and could be oily due to rust prevention treatment.

2. Please keep children away from the fence while assembling it to ensure their safety.

3. Strong winds may damage the product, so the fence should be disassembled in adverse weather conditions.

4. Make sure to maintain a sufficient distance from houses, as well as gas lines and power lines, to avoid potential damage. Please check the area for power cables and gas lines; if necessary, you may inquire with your local authority for further information.

PARTS LIST

A	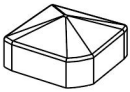 Post End Cap X 5	B	 Post X 5
C	 Middle Slat X 16	D	 Post Stake X 5
E	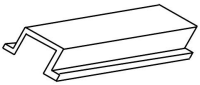 Post clip X 16	F	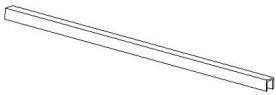 U-Channel X 8
G	 Self-Drilling Screw X 26 (ST4.8*19mm)	H	 Self-Tapping Screw X 16 (ST5.5*50mm)
After the installation is completed, there will be excess screws, and these are spares.			

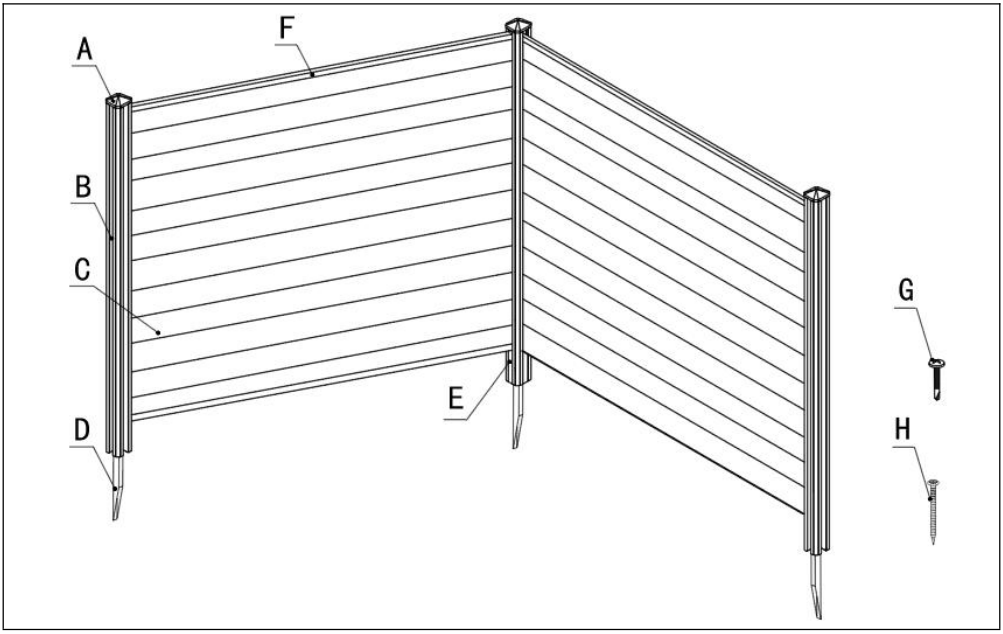

ASSEMBLY STEP

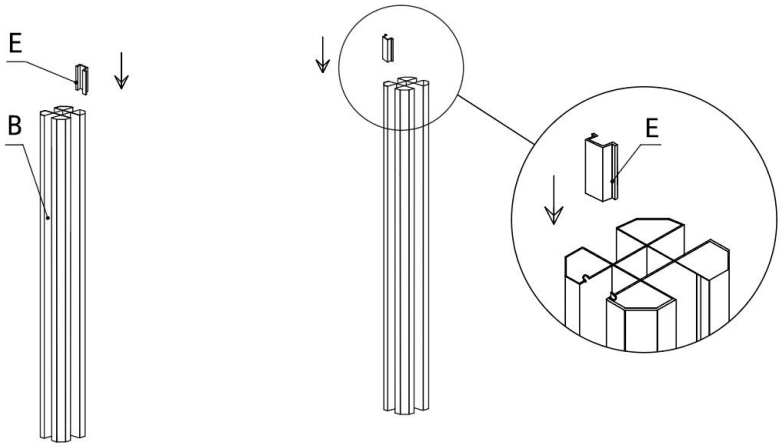

1. Slide the Post clip (E) down along the grooves of the Post (B).

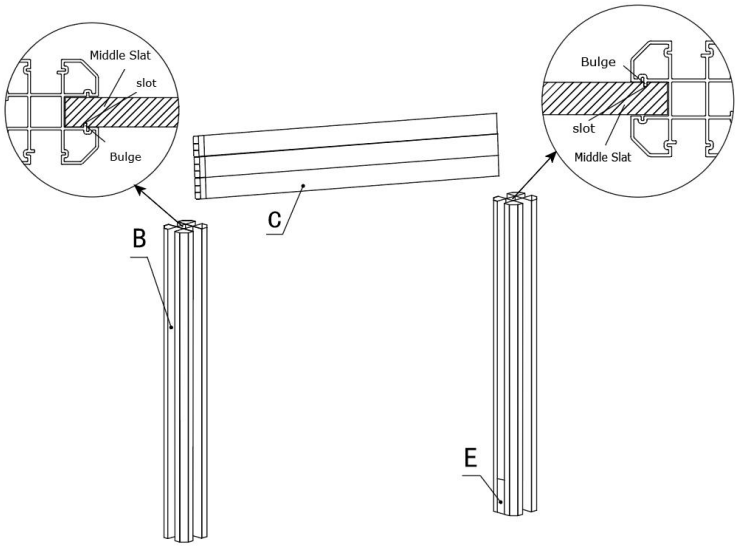

2. Slide the Middle Slat (C) down along the grooves of the Post (B) until it abuts the Post clip (E).

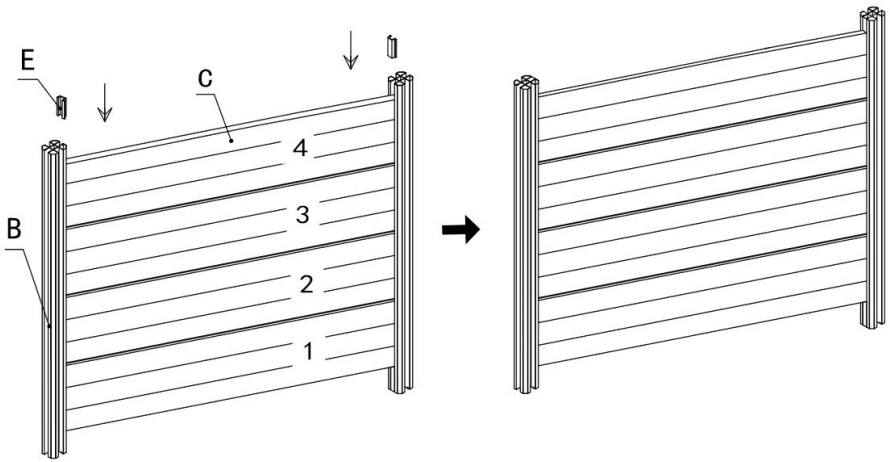

3. After placing 3 more pieces of Middle Slat (C) and Post clip (E), the grooves of Post (B) are filled.

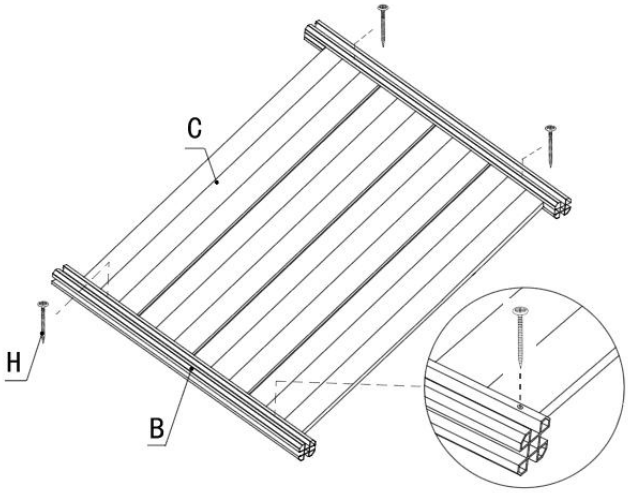

4. Use the Self-Tapping Screws (H) to fasten the first and last pieces of the Middle Slat (C) to the Post (B).

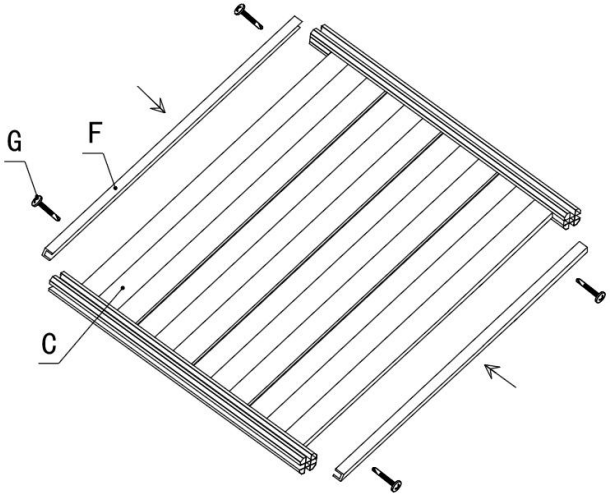

5. Insert the U-Channel (F) into the Middle Slat (C), then fasten it with the Self-Drilling Screw (G).

Repeat the above steps to complete the installation of the remaining sections of fence.

180°degree application

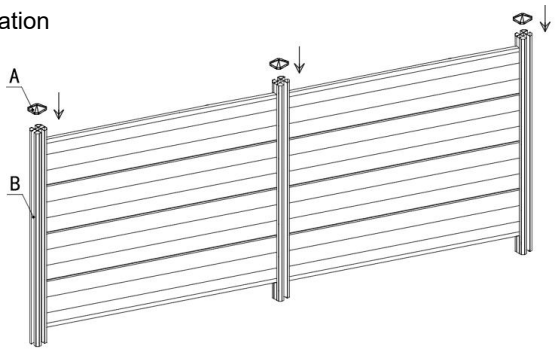

90°degree application

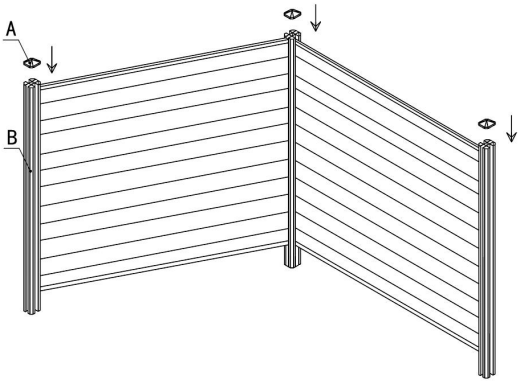

6. After assembly is completed, install the Post End Cap (A) onto the Post (B).
Note: Refer to the methods above, and you may assemble the desired shape according to your own preferences.

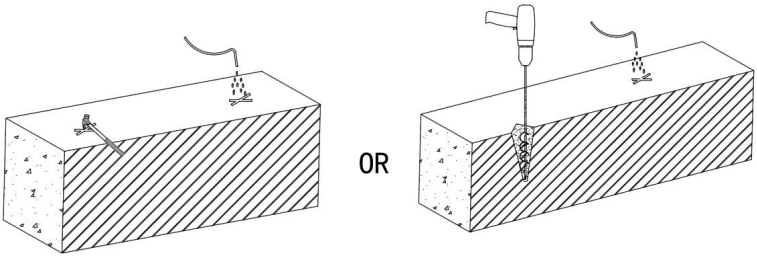

7. As illustrated, use a claw hammer or an auger bit to loosen the hard soil. If necessary, you can add water to loosen it.

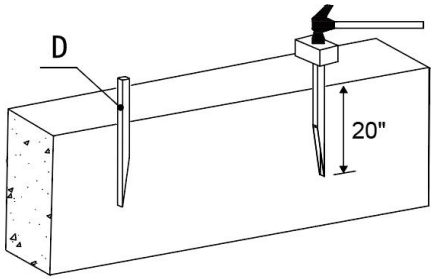

8. Insert the Post Stake (D) into the ground. Place a wooden block on top of the Post Stake (D) to shield it, then softly tap it into the ground using a hammer, and ensure that the insertion depth is no less than 20 inches.
Note: Do not tap the Post Stake (D) directly.

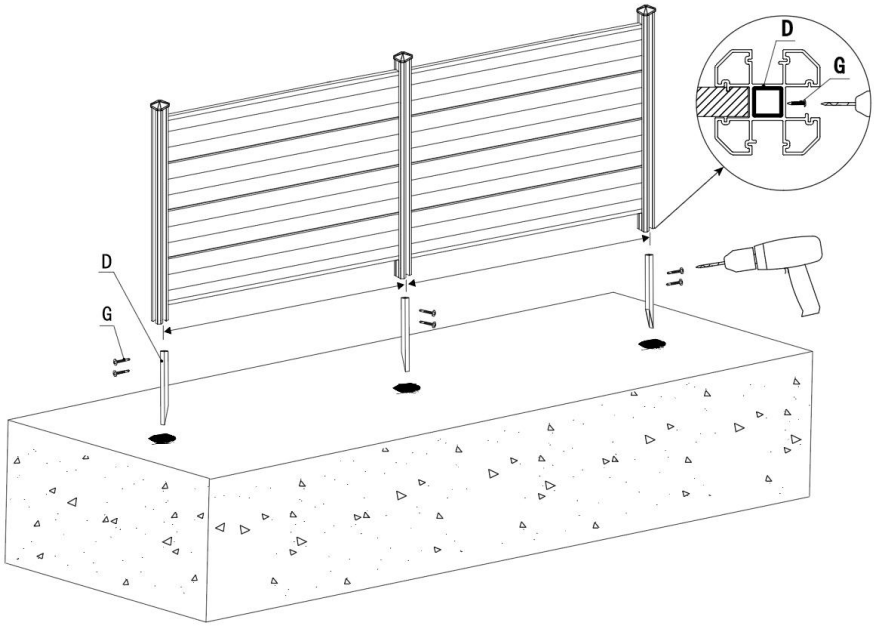

8. Based on the actual shape of the installed fence, measure the distance between the Post Stakes (D). Drive the Post Stakes (D) into the soil. Place the Fence onto them, and finally fasten everything in place with Self-Drilling Screws (G).

PRODUCT PARAMETER

Model	Size of Single Fence	Number of Fence	Color
TJ-SKU3	50inch×50inch	4	White

Manufacturer: Shanghaimuxinmuyeyouxiangongsi
Address: Shuangchenglu 803nong11hao1602A-1609shi, baoshanqu, shanghai 200000 CN.
Imported to AUS: SIHAO PTY LTD. 1 ROKEVA STREETEASTWOOD NSW 2122 Australia
Imported to USA: Sanven Technology Ltd. Suite 250, 9166 Anaheim Place, Rancho Cucamonga, CA 91730

UK	REP

YH CONSULTING LIMITED. C/O YH Consulting Limited Office 147, Centurion House, London Road, Staines-upon-Thames, Surrey, TW18 4AX

EC	REP

E-CrossStu GmbH
Mainzer Landstr.69,
60329 Frankfurt am Main.

