KB660,1,2,3,5,6,7,8AL
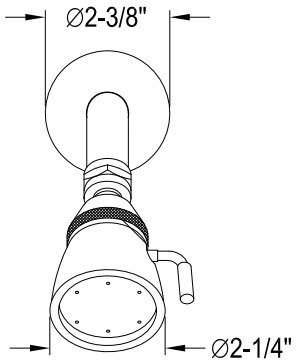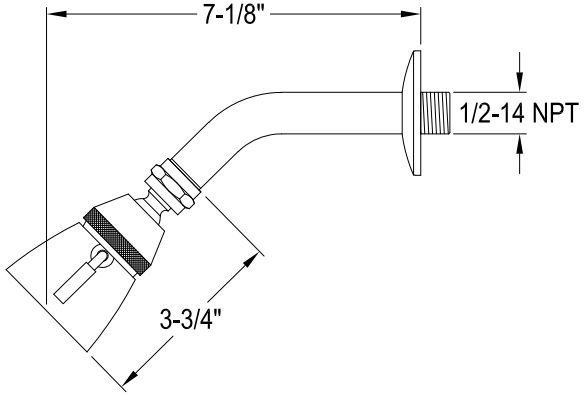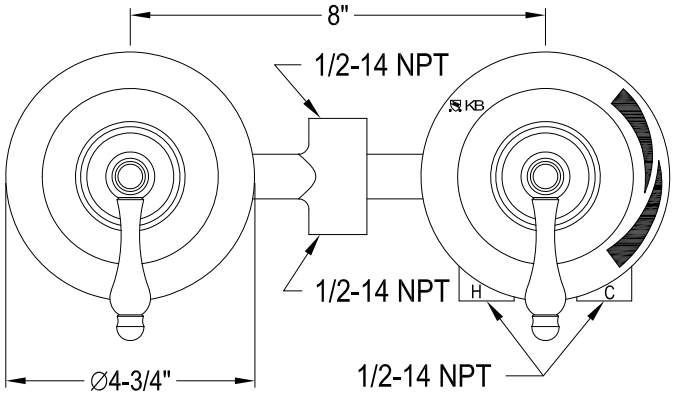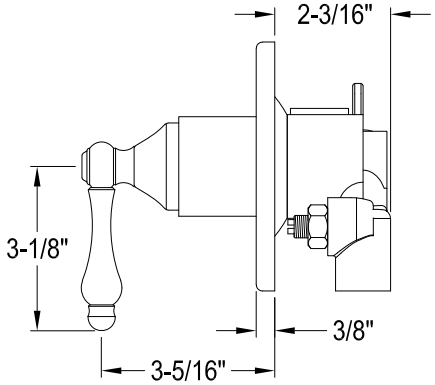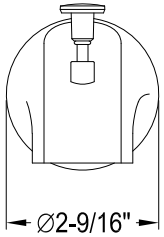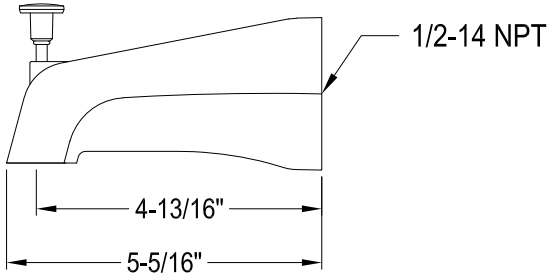
Twin Handles Pressure Balanced Tub & Shower Faucet With Volume Control