Installation & Assembly

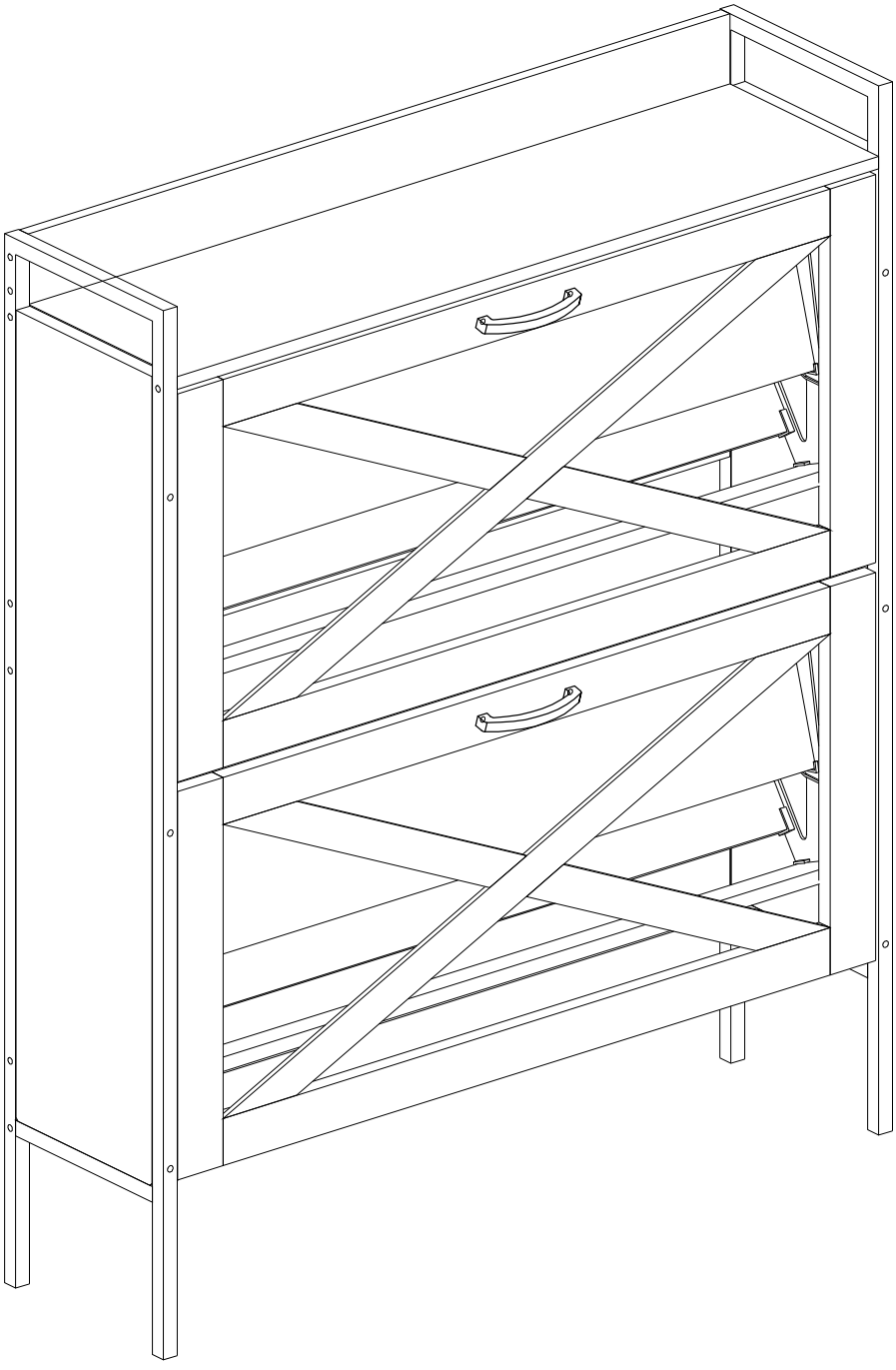

EN

General Guidelines

- Please read the following instruction carefully and use the product accordingly.
- Please keep this manual and hand it over when you transfer the product.
- This summary may not include every detail of all variations and considered steps. Please contact us when further information and help are needed.

Notes

- The product is intended for indoor use only. The product must be assembled and used in accordance with the provisions of the manual. Personal injury and/or damage to product may occur if products are used outside of their intended purposes and/or if products have been changed/modified from their original design. The seller does not assume any responsibility or liability with respect to any injury/damage caused by incorrect assembly or improper use.
- Avoid long-term exposure to humid environments to prevent mildew.
- Keep the product away from fire sources and high temperatures. Do not expose the product to direct sunlight.
- Do not place any hot objects on the surface of the product.
- If there are any defective or missing parts after unpacking, please cease assembly immediately and contact us.
- Please assemble the item on a spacious surface and do not place the unwrapped product directly on the ground to avoid product damage.
- Please do not stand or sit on the wooden boards.
- Please wear gloves during the assembly and/or disassembly process to avoid scratches from any sharp edges.
- Please match the corresponding part and fitting based on the part number in the manual.
- If the part does not match with the fitting, please check the piece as specified in this manual.
- During assembly, first loosely align all screws with the corresponding pre-drilled holes and then tighten the screws one by one.
- Periodically inspect screw tightness while the product is in use. If necessary, retighten to ensure structural integrity.
- If you accidentally spill water or another liquid on the surface, immediately wipe clean with a dry towel.
- Please keep the product away from sharp, pointed objects and corrosive substances to prevent product damage.
- Please place this item on level, solid ground during use.

Warnings

- During assembly, keep all small parts out of the reach of children. It may be fatal if swallowed or inhaled.
- Children should not climb or play on the product in order to avoid tipping over the furniture and causing serious injury.
- To avoid the potential dangers of suffocation, please keep all parts and packaging (film, plastic bags, foam, etc.) away from babies and children.
- Keep sharp objects and corrosive items away from the product to avoid any damage or injury.
- Do not shake or move violently during use to avoid tipping over the product.

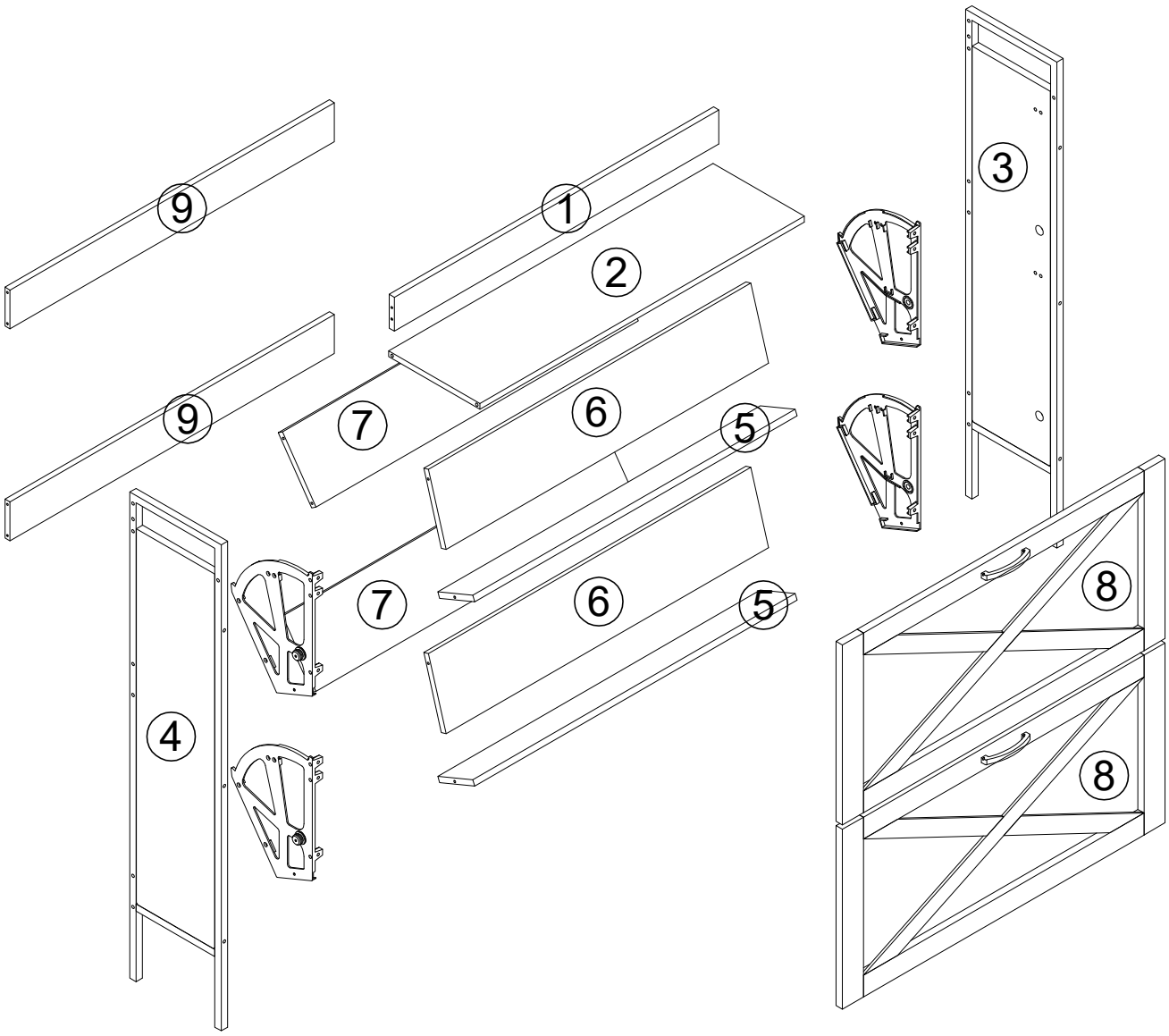
9
1
2
3
9
7
6
5
7
6
5
8
4
8

Part list

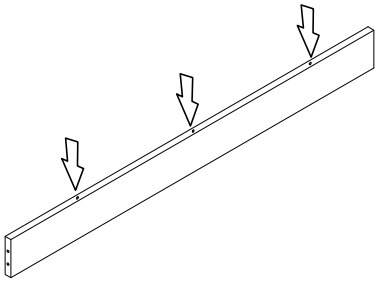

①X1

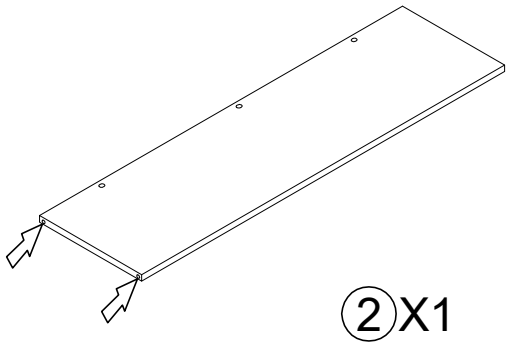

②X1

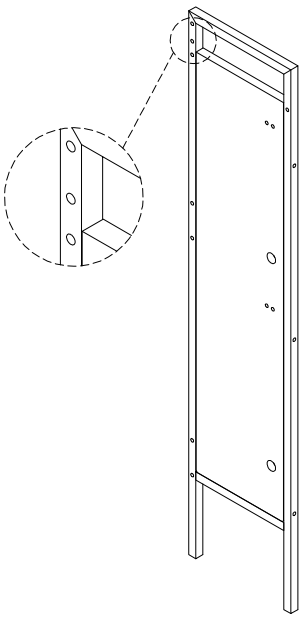

③X1

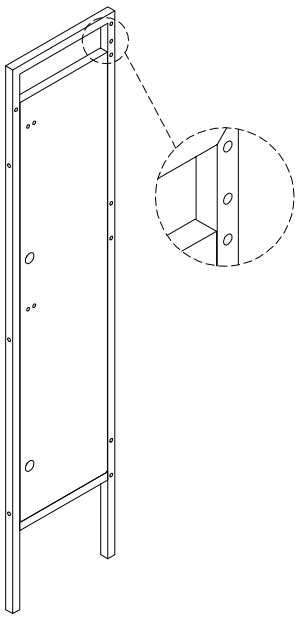

④X1

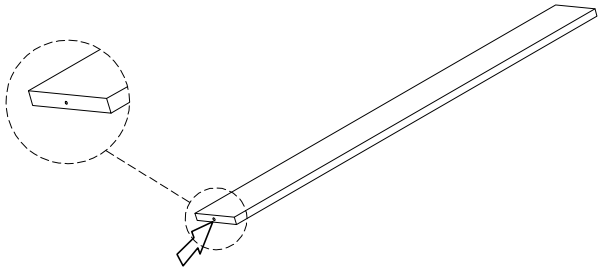

⑤X2

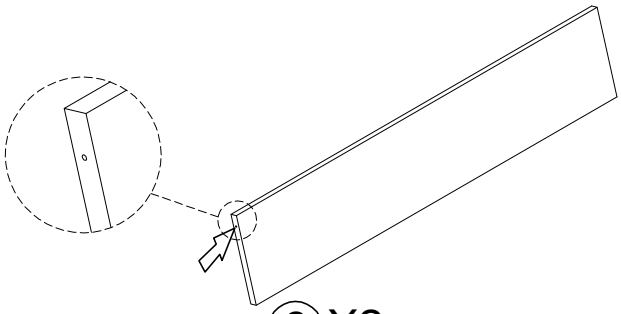

⑥X2

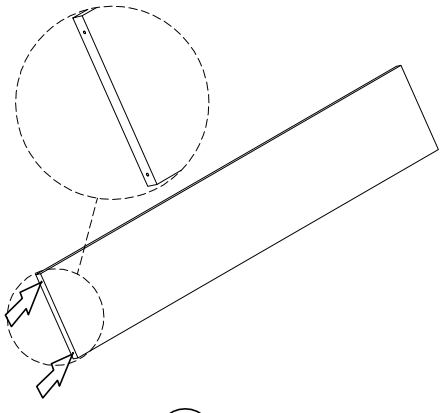

⑦X2

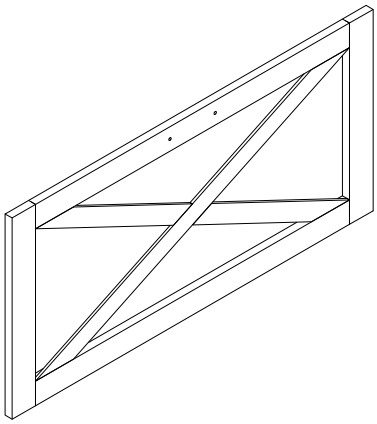

⑧X2

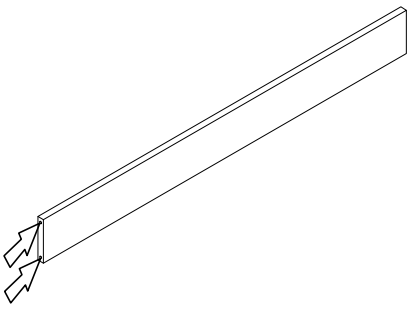

⑨X2

Hardware list

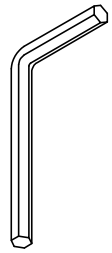

Ⓐ X1

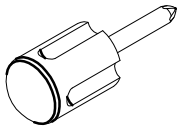

Ⓑ X1



Ⓒ X28+2

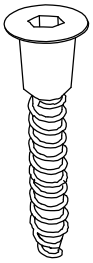

Ⓓ X19+2

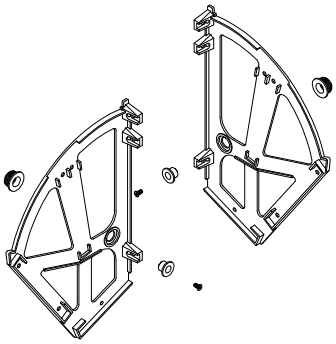

Ⓔ X2

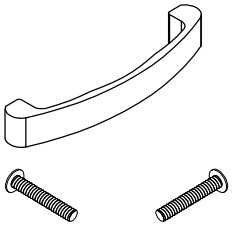

Ⓕ X2

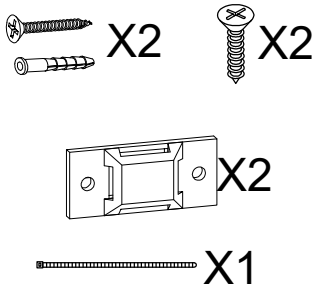

Ⓖ X2

Parts List(EN)

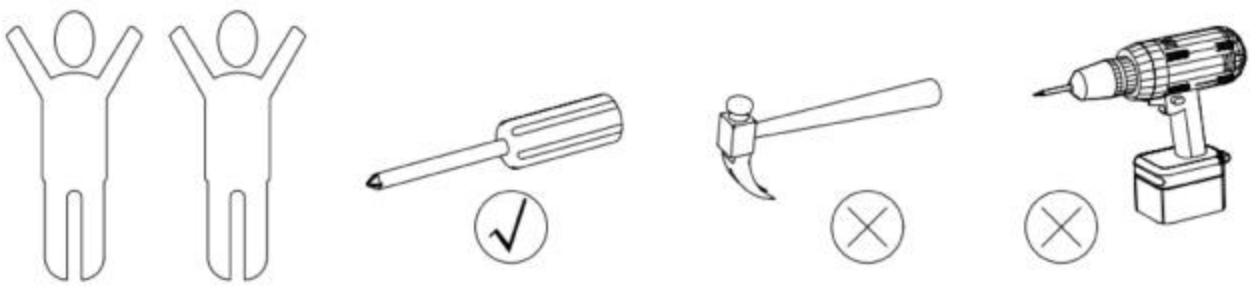

1

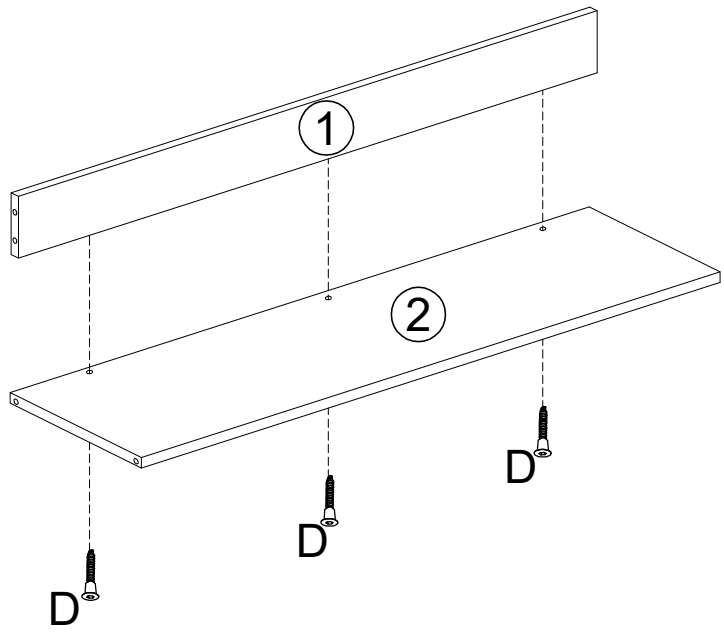

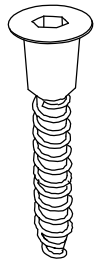

DX3

2

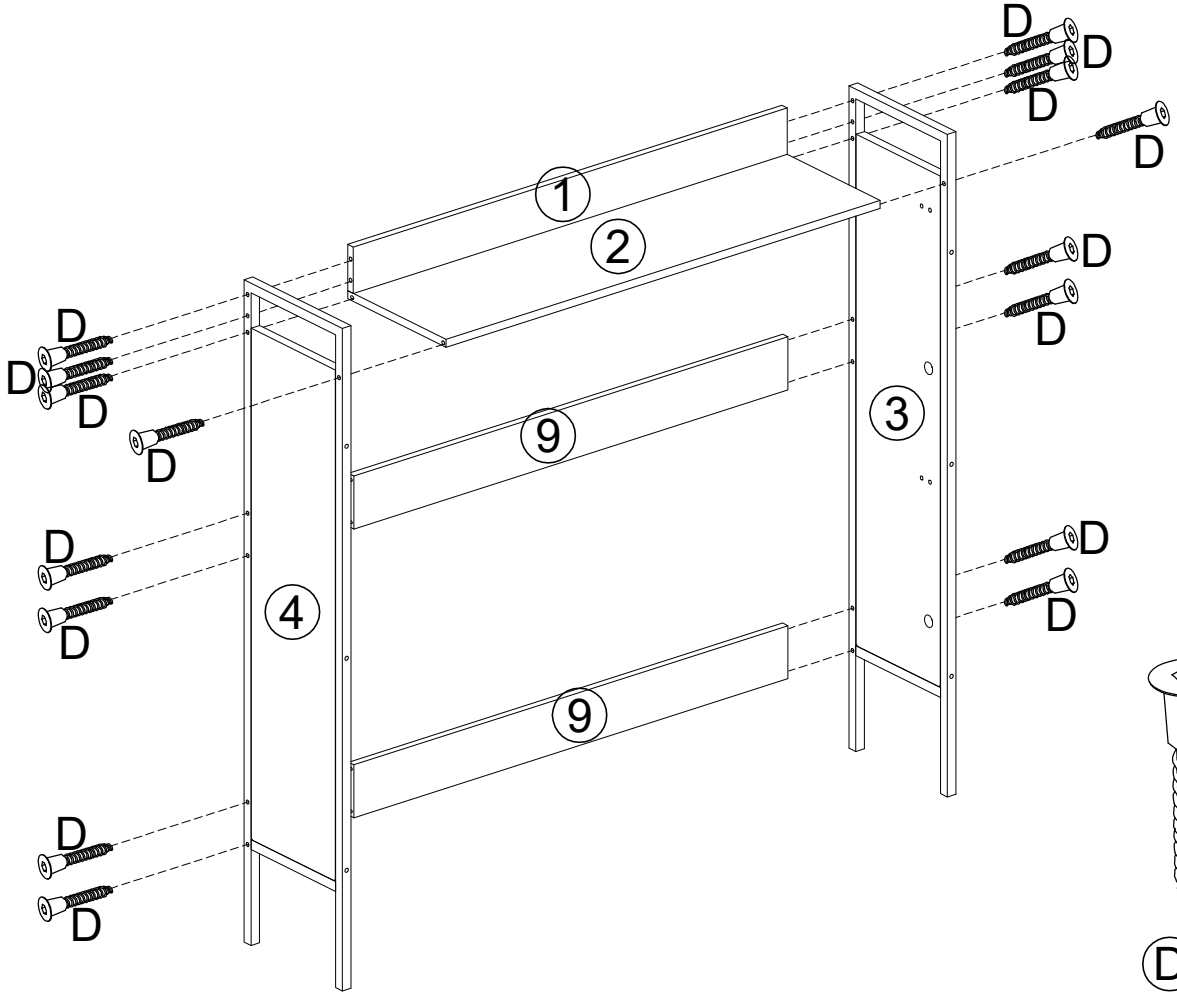

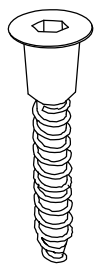

DX16

3

X2

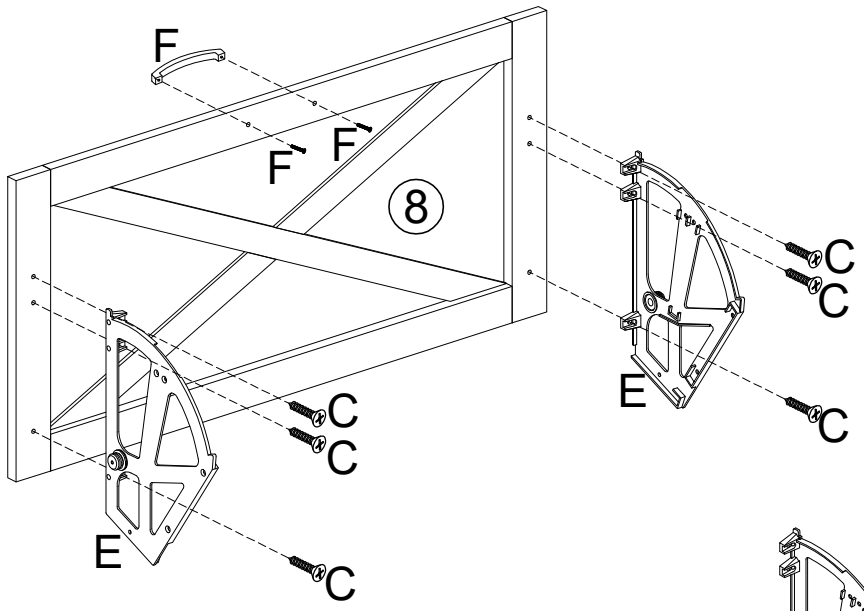

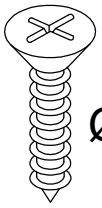

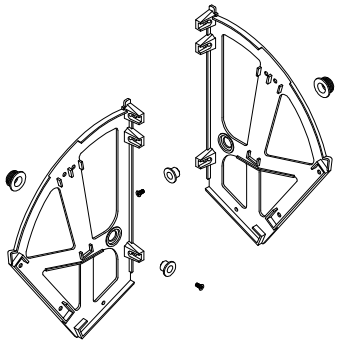

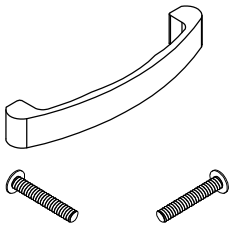

ⒸX12 ⒺX2 ⒻX2

4

X2

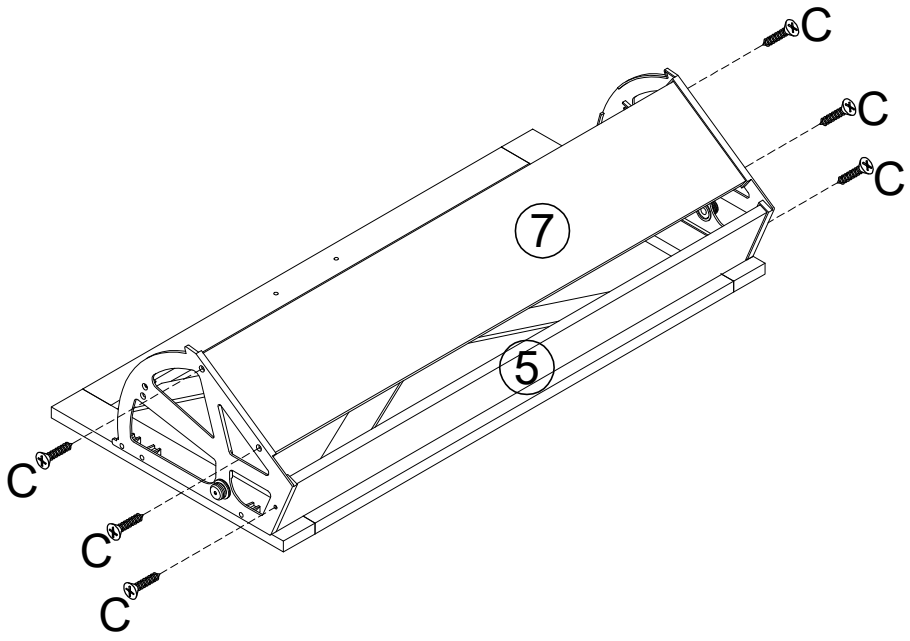



ⒸX12

5

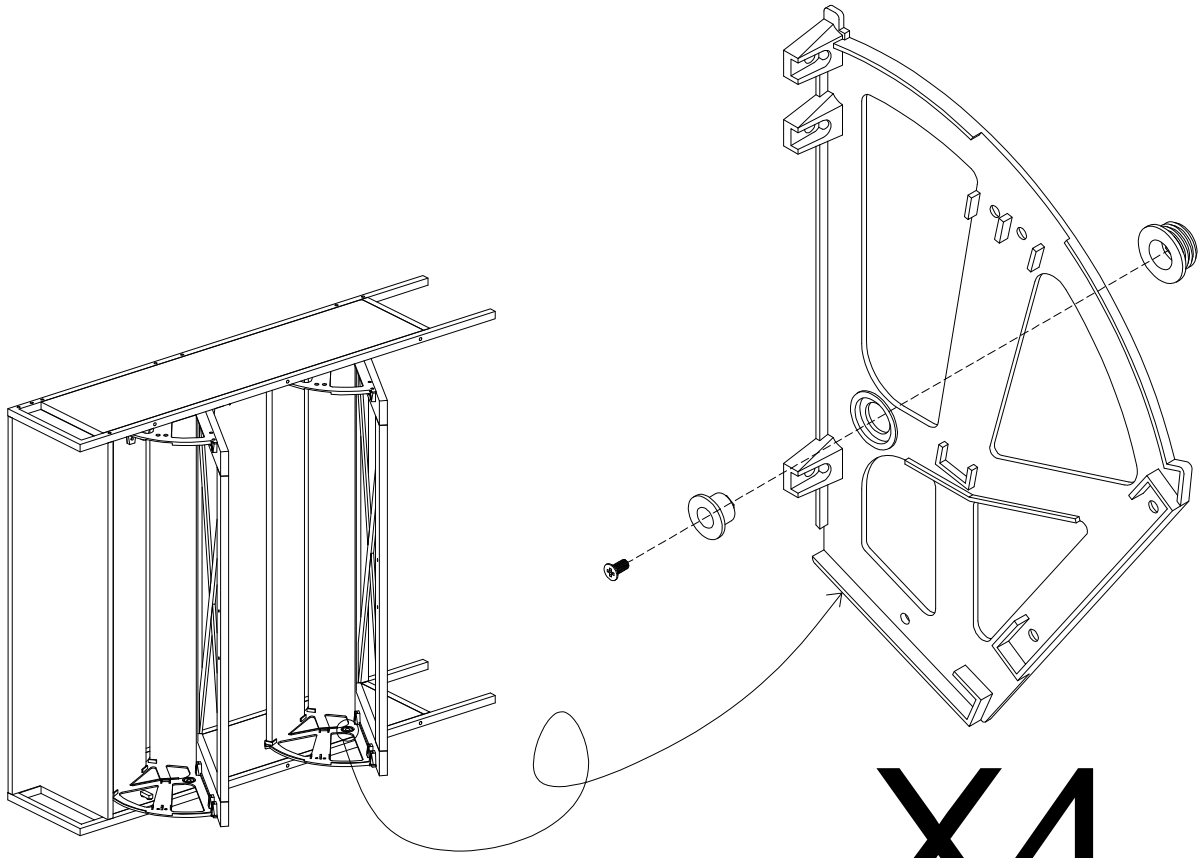

6

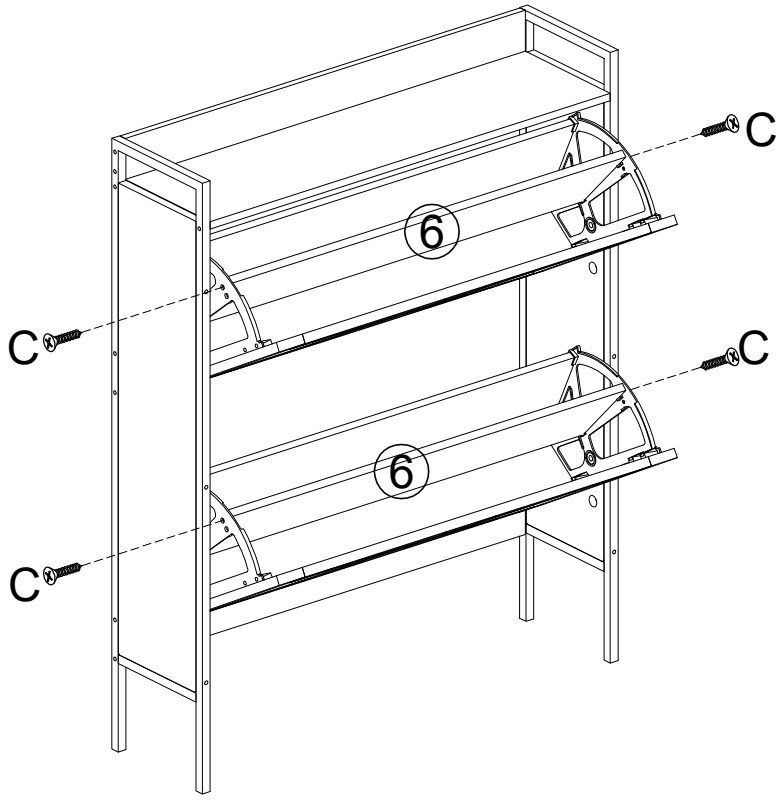



ⓒX4

7

Serious or fata iniuries can occur from furniture tipping over,to prevent furniture from tipping over, we recommend that it be permanently fixed to the wall. This product contains wall anchors and hardware. Make sure the hardware fits the wall before installation.

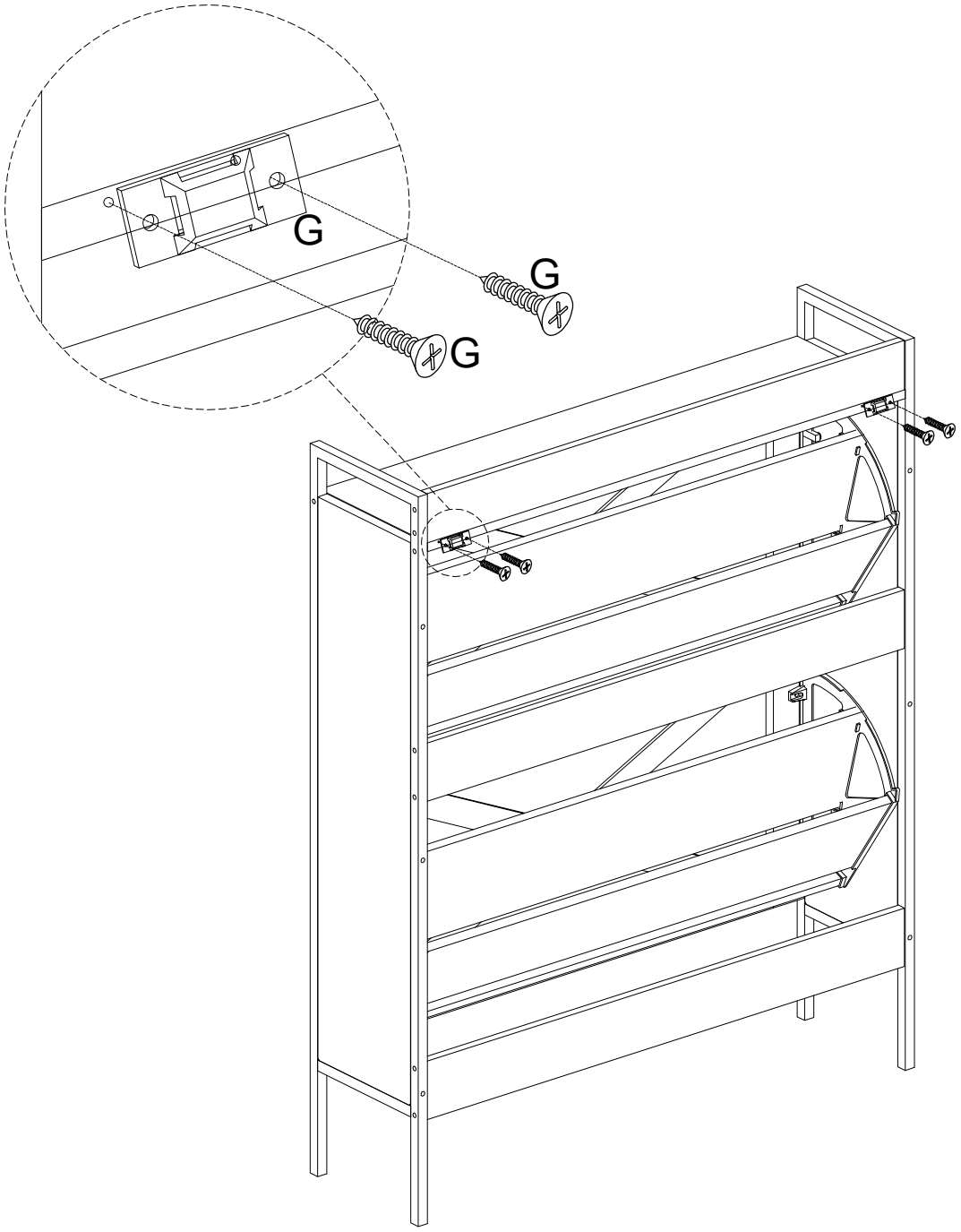

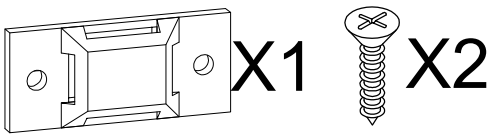

GX2

8

Serious or fata iniuries can occur from furniture tipping over, to prevent furniture from tipping over, we recommend that it be permanently fixed to the wall. This product contains wall anchors and hardware. Make sure the hardware fits the wall before installation.

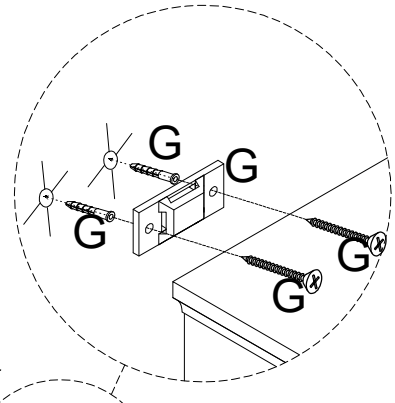

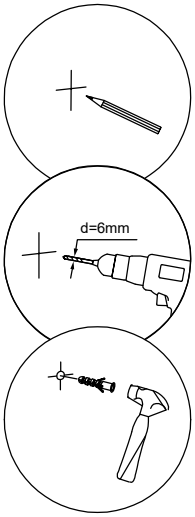

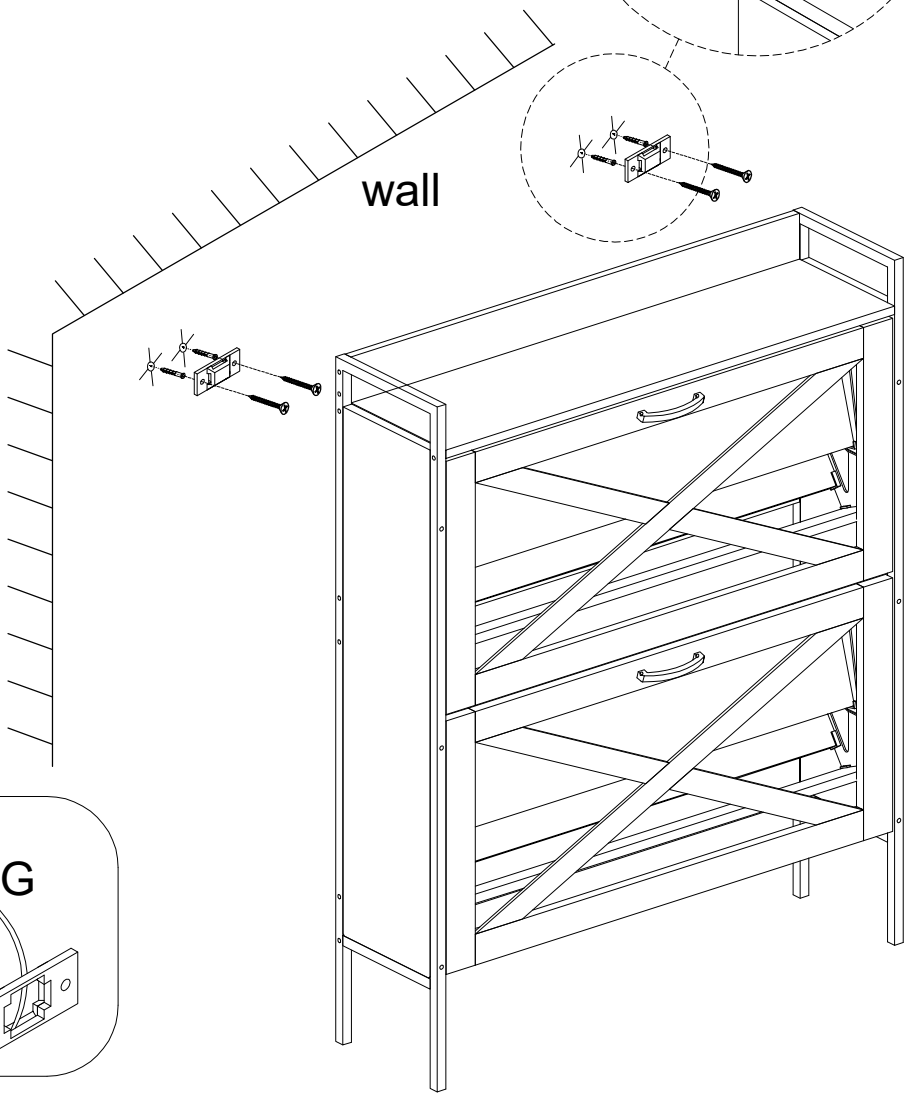

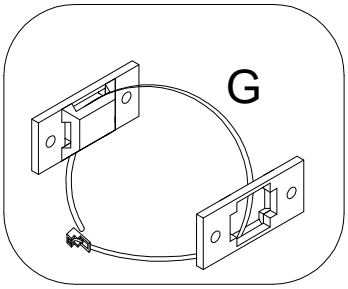

Finally, connect G's two pieces of hardware.

