Loft Bed

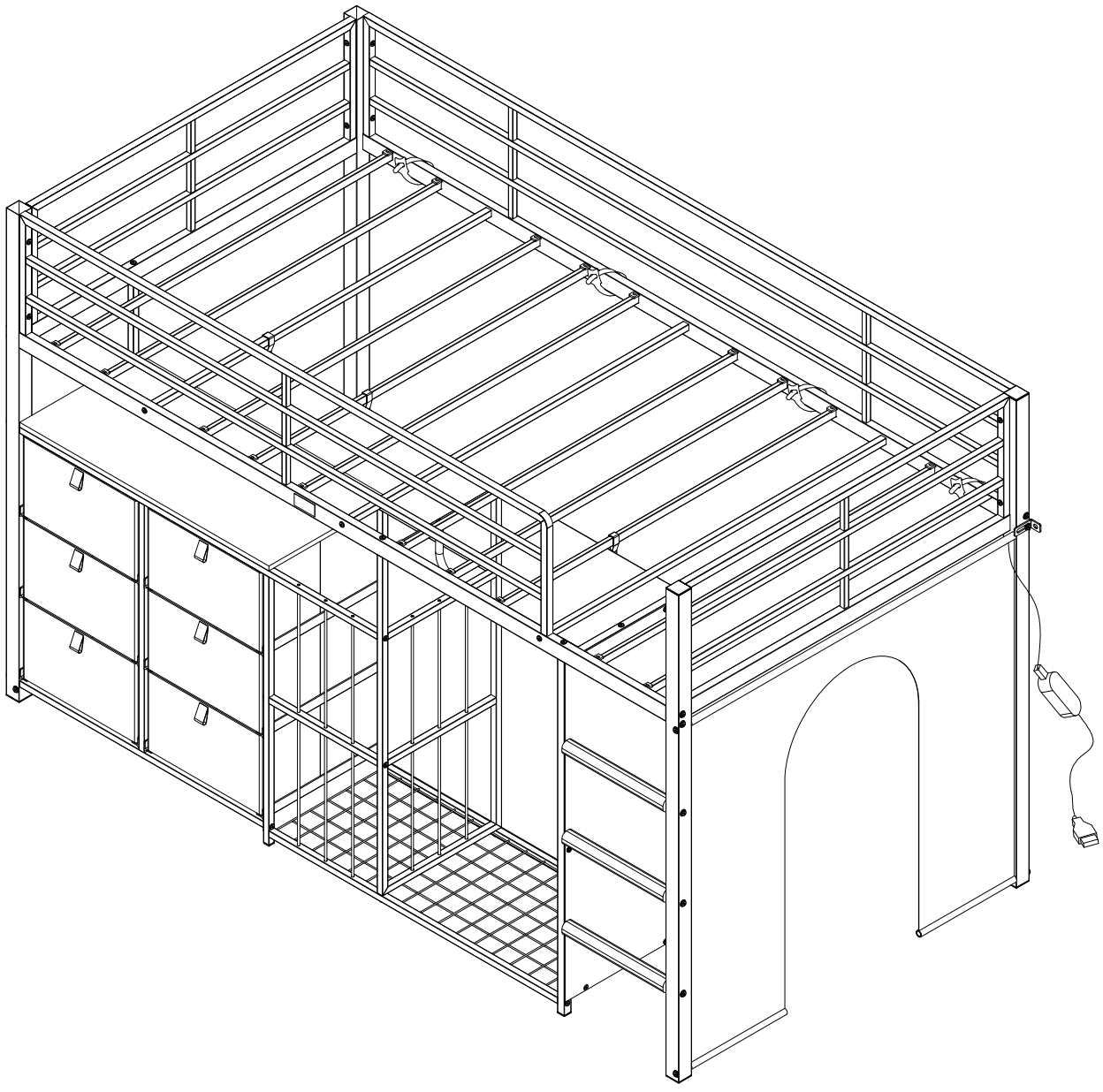



2 PERS.

Version 1.0

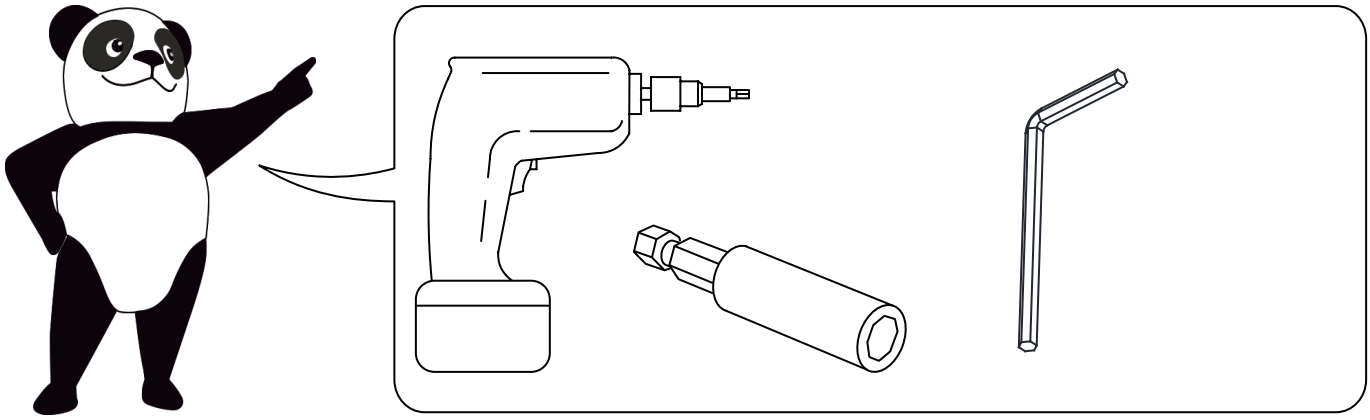

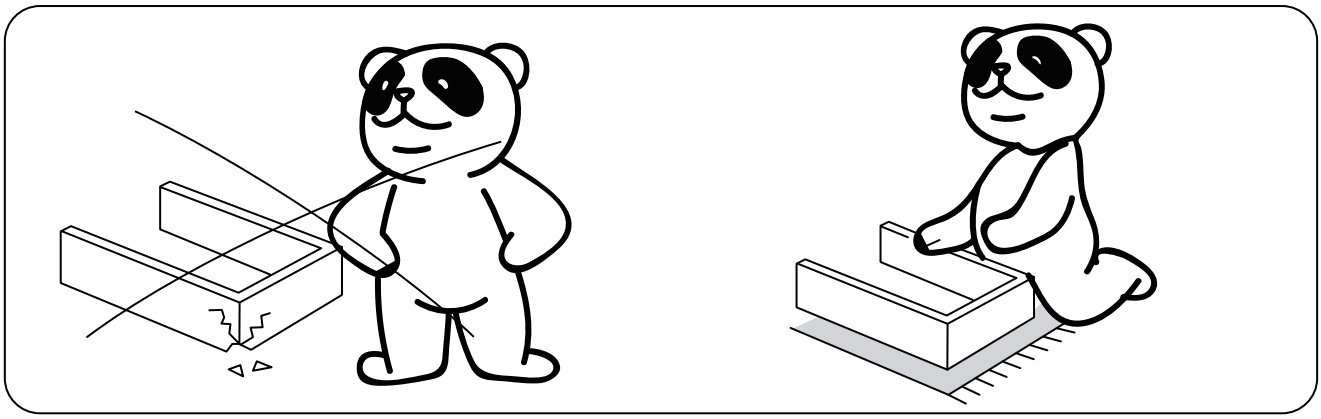

Violent installation is prohibited

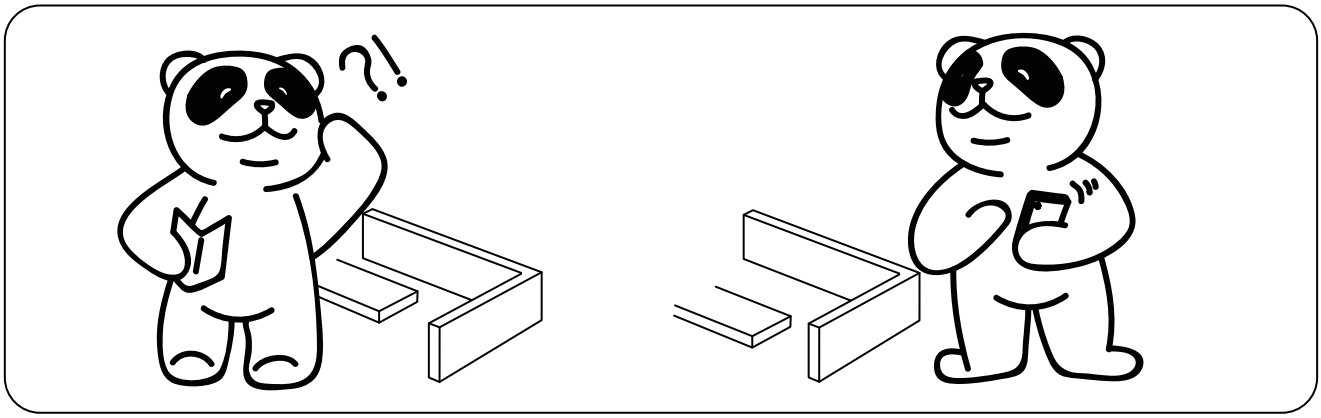

Please call if you need help

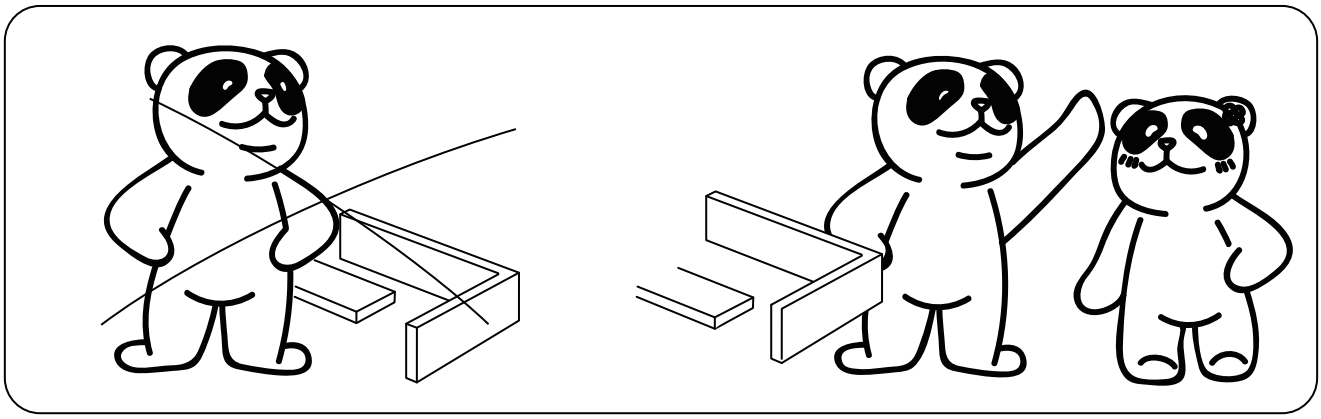

Multi-person cooperation is recommended

⚠Pls make sure all the accessories are complete!

PARTS LIST

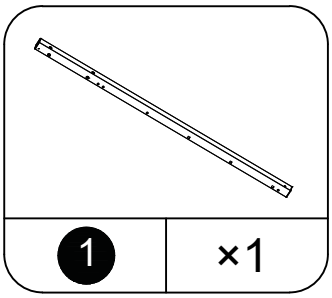
1 ×1

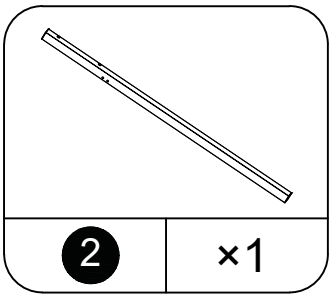
2 ×1

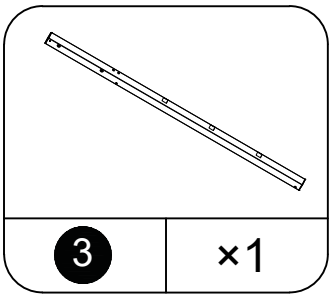
3 ×1

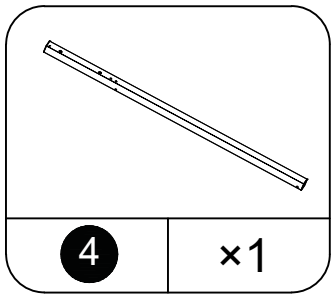
4 ×1

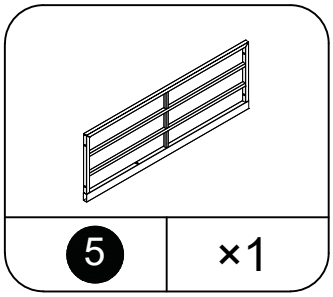
5 ×1

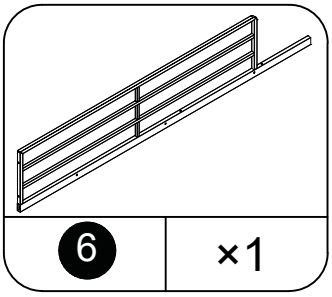
6 ×1

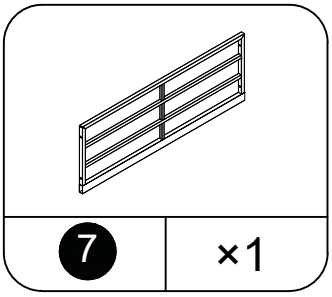
7 ×1

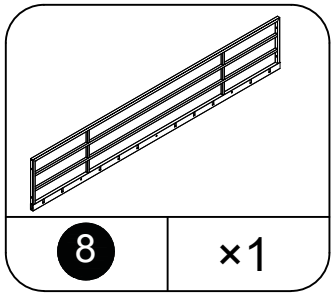
8 ×1

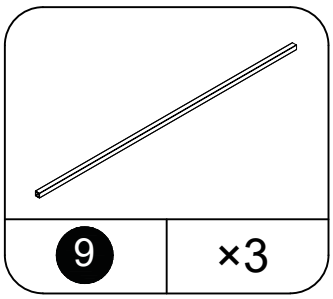
9 ×3

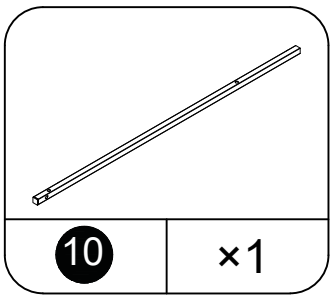
10 ×1

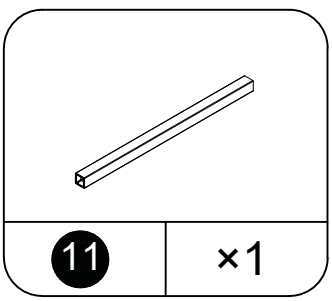
11 ×1

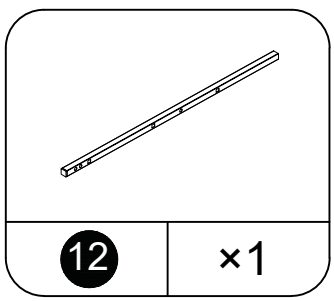
12 ×1

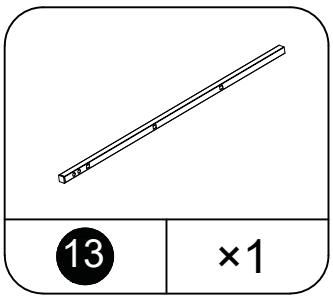
13 ×1

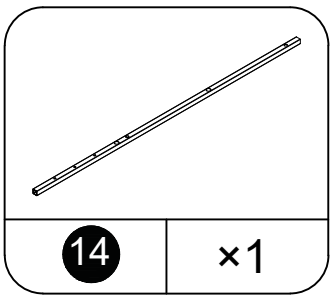
14 ×1

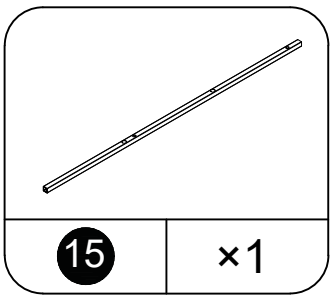
15 ×1

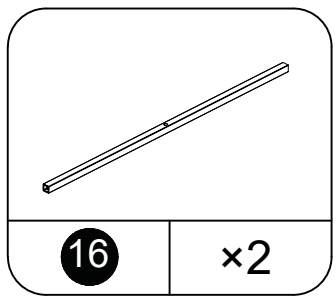
16 ×2

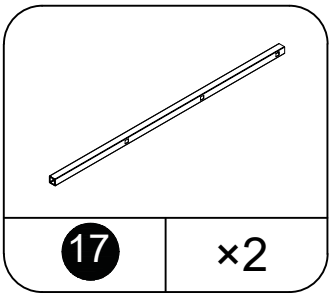
17 ×2

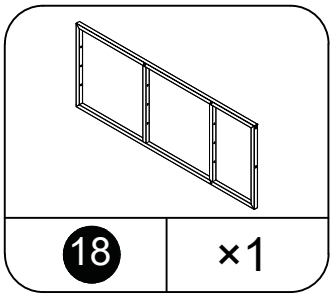
18 ×1

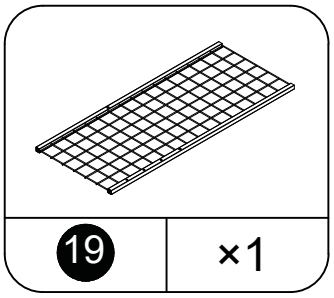
19 ×1

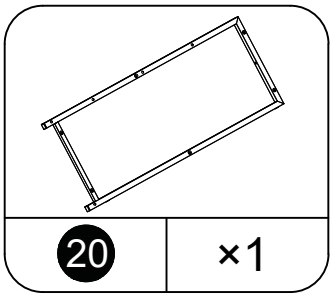
20 ×1

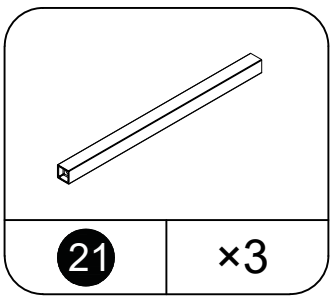
21 ×3

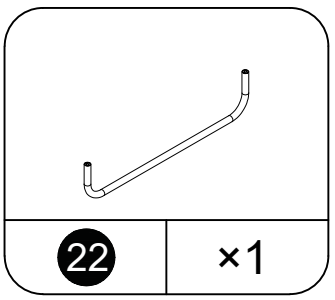
22 ×1

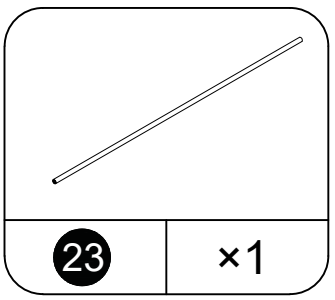
23 ×1

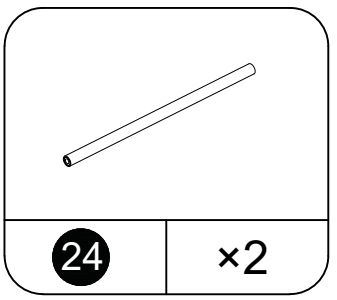
24 ×2

⚠Pls make sure all the accessories are complete!

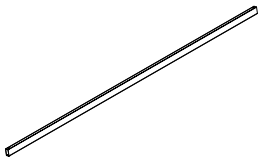

25 ×10

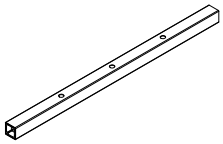

26 ×1

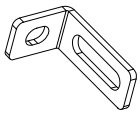

27 ×2

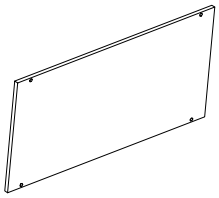

28 ×1

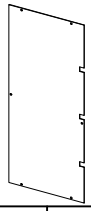

29 ×1

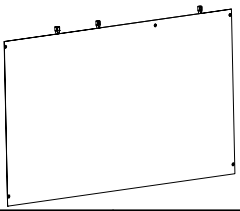

30 ×1

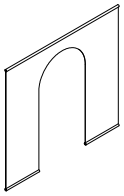

31 ×1

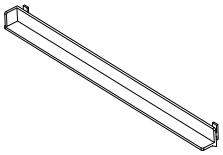

32 ×6

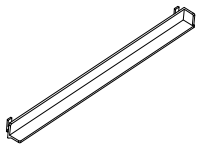

33 ×6

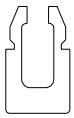

34 ×20

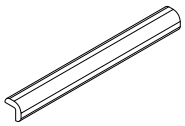

35 ×3



36 ×1

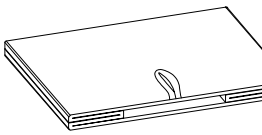

37 ×3

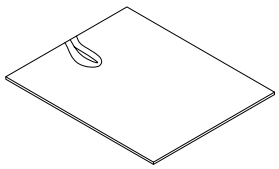

38 ×3



39 ×4

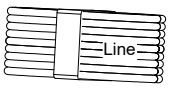

×2

plastic clip ×4

40

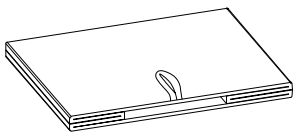

41 ×3

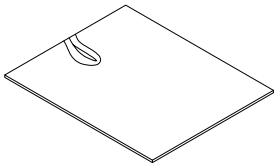

42 ×3

⚠Pls make sure all the accessories are complete!

HARDWARE LIST



M6*12	
A	×11+1

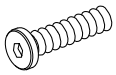

M6*24	
B	×11+1

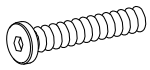

M6*35	
C	×31+3

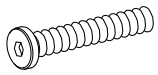

M6*40	
D	×11+1

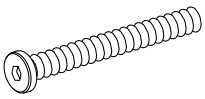

M6*60	
E	×18+1



M6 washer	
F	×12+1

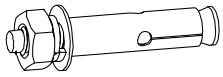

M6	
G	×2

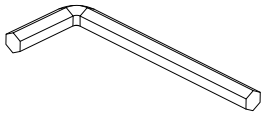

4#	
H	×1

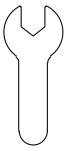

M6	
I	×1

Note:

1,Should be assembled on flat ground to keep balance.

2.Before completing the installation,do not tighten the screws.

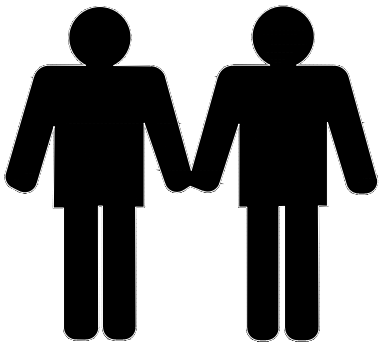

It needs at least
two people to install



Before starting the assembly ,
you must read the whole manual
and follow the instructions .

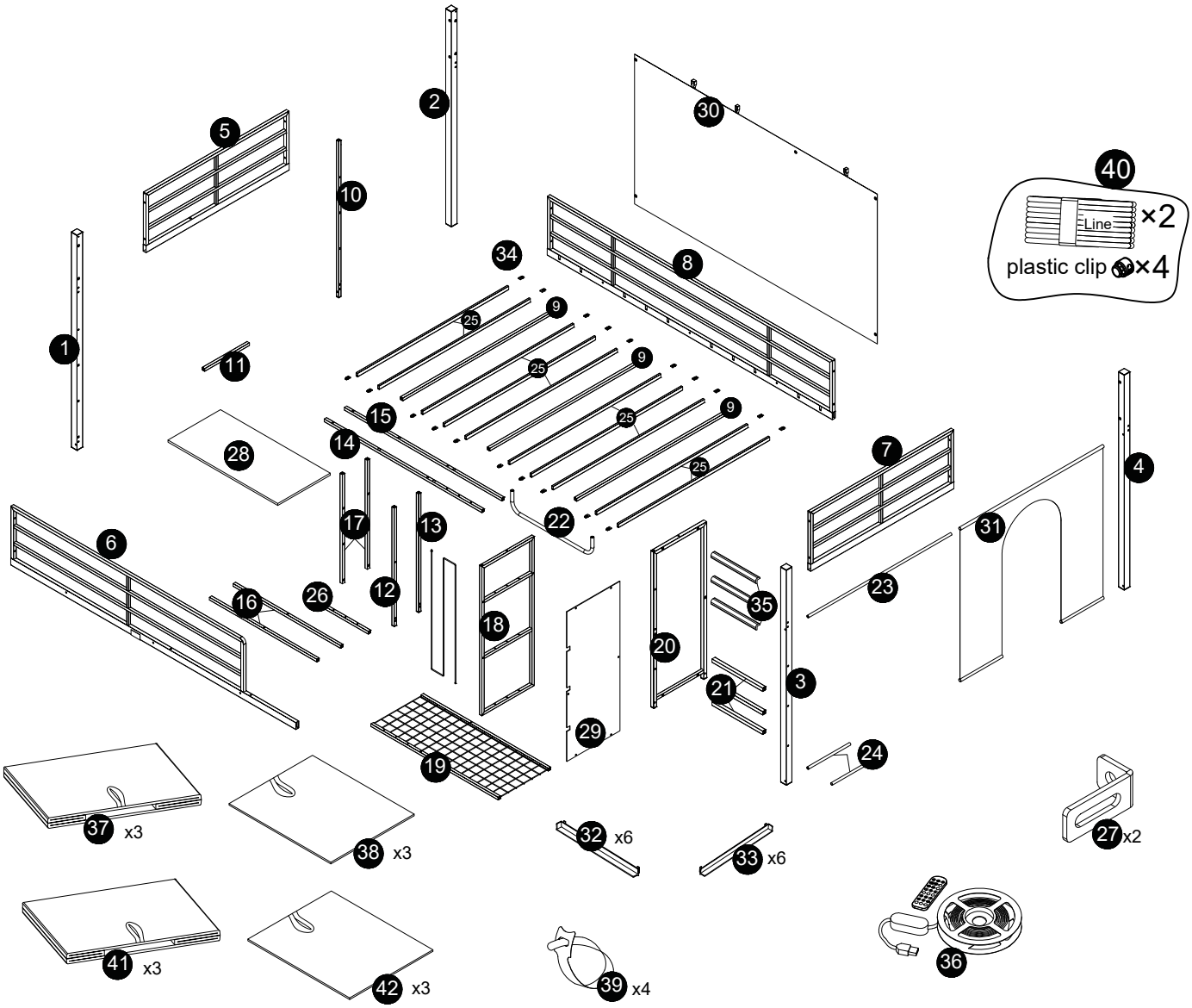

1

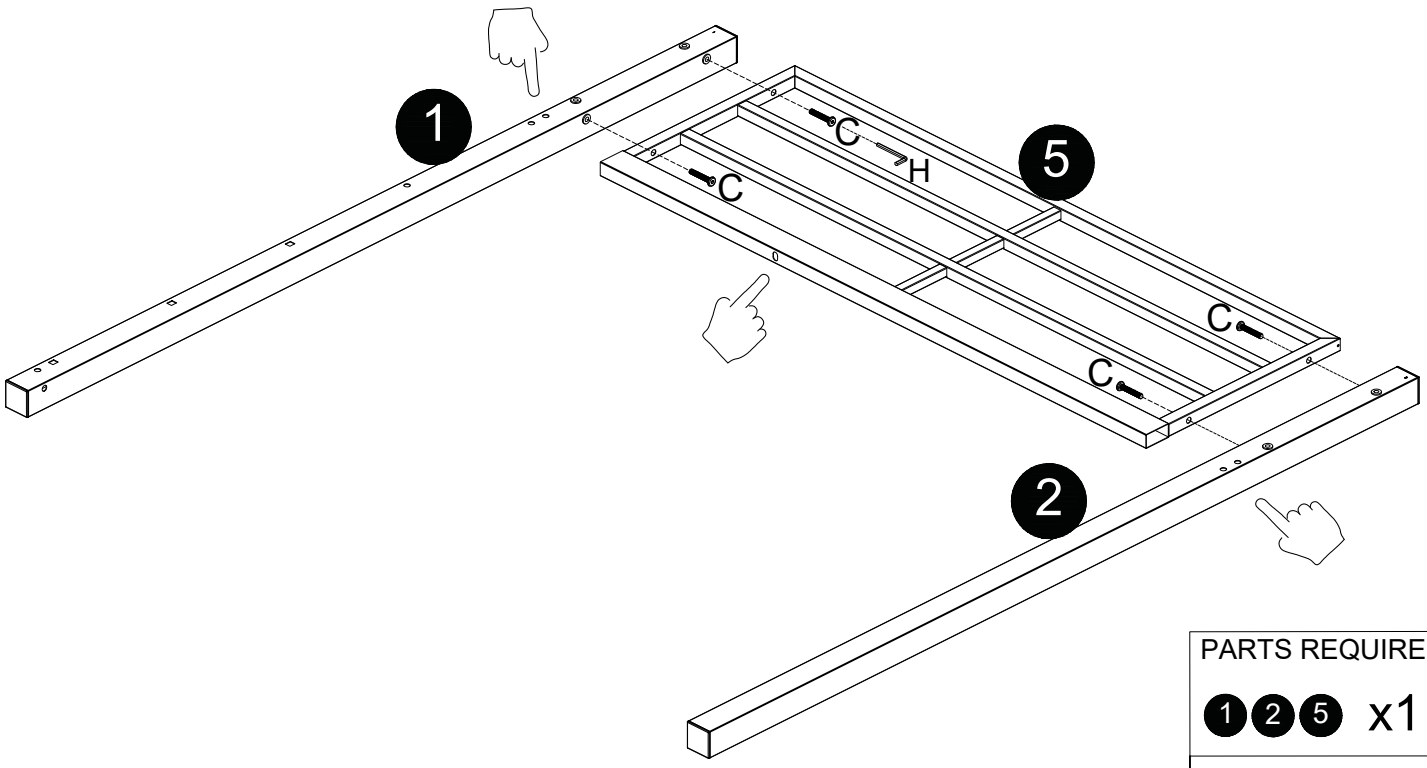

PARTS REQUIRED
1 2 5 x1
C M6*35 x4

2

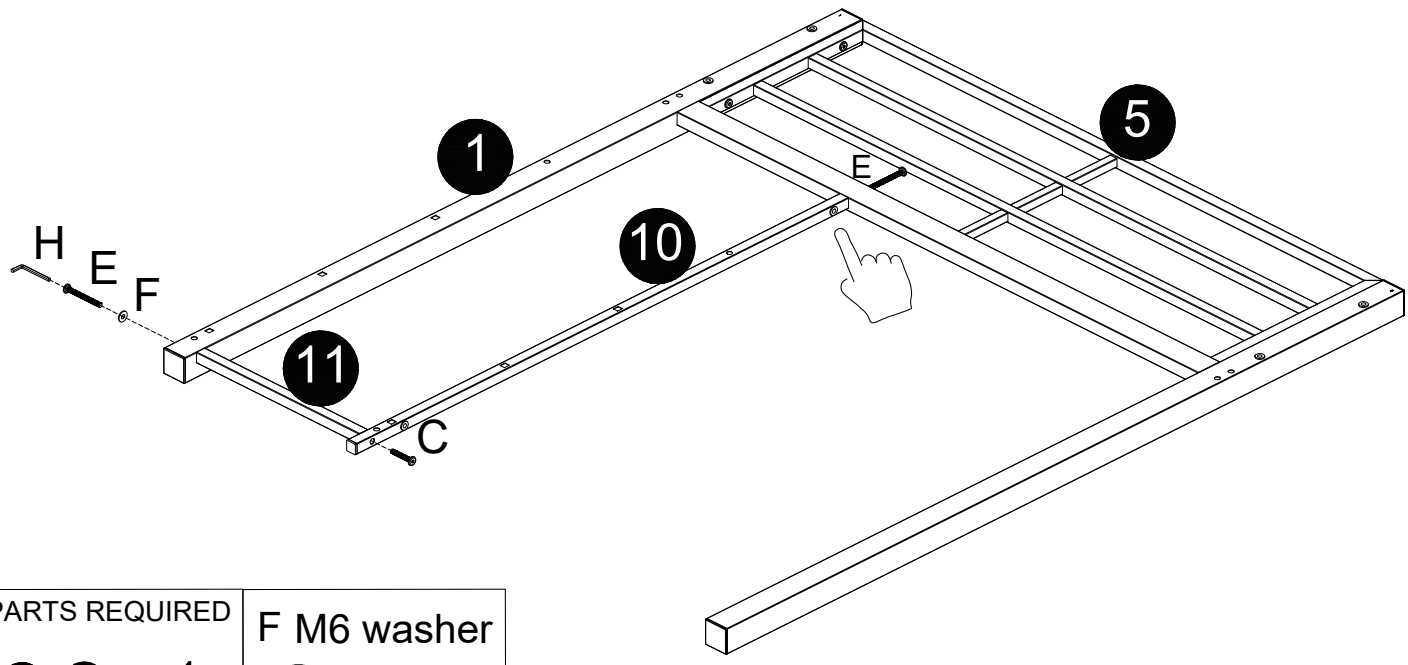

PARTS REQUIRED	F M6 washer
10 11 x1	x1
C M6*35 x1	E M6*60 x2

3

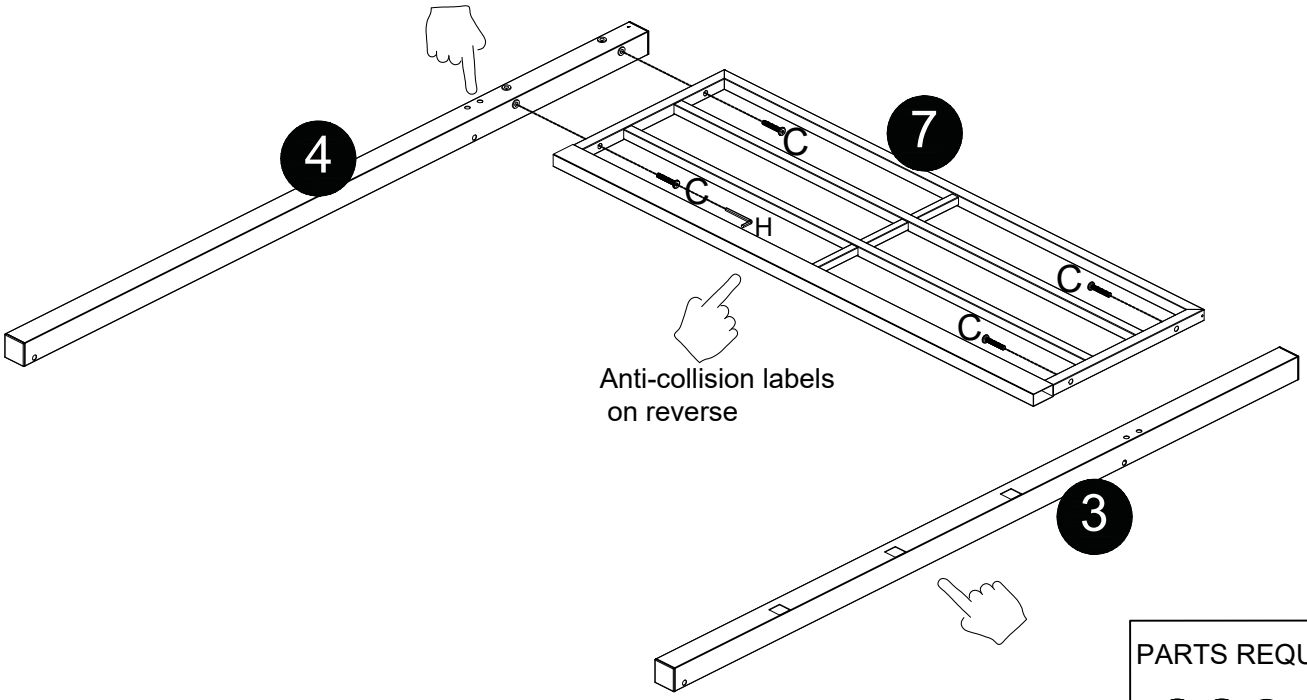

PARTS REQUIRED

3 4 7 x1

C M6*35

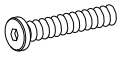 x4

4

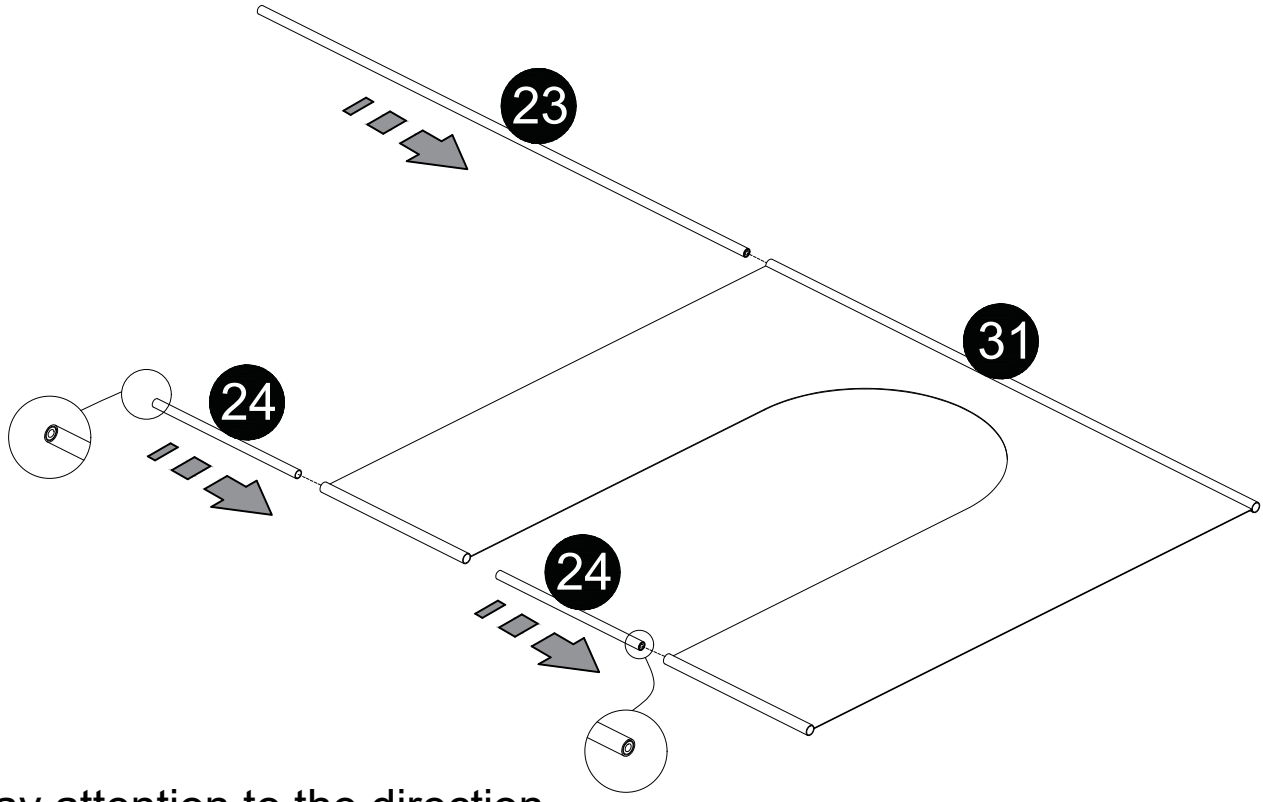

Pay attention to the direction of 24# hole position.

PARTS REQUIRED

23 31 x1

24 x2

5

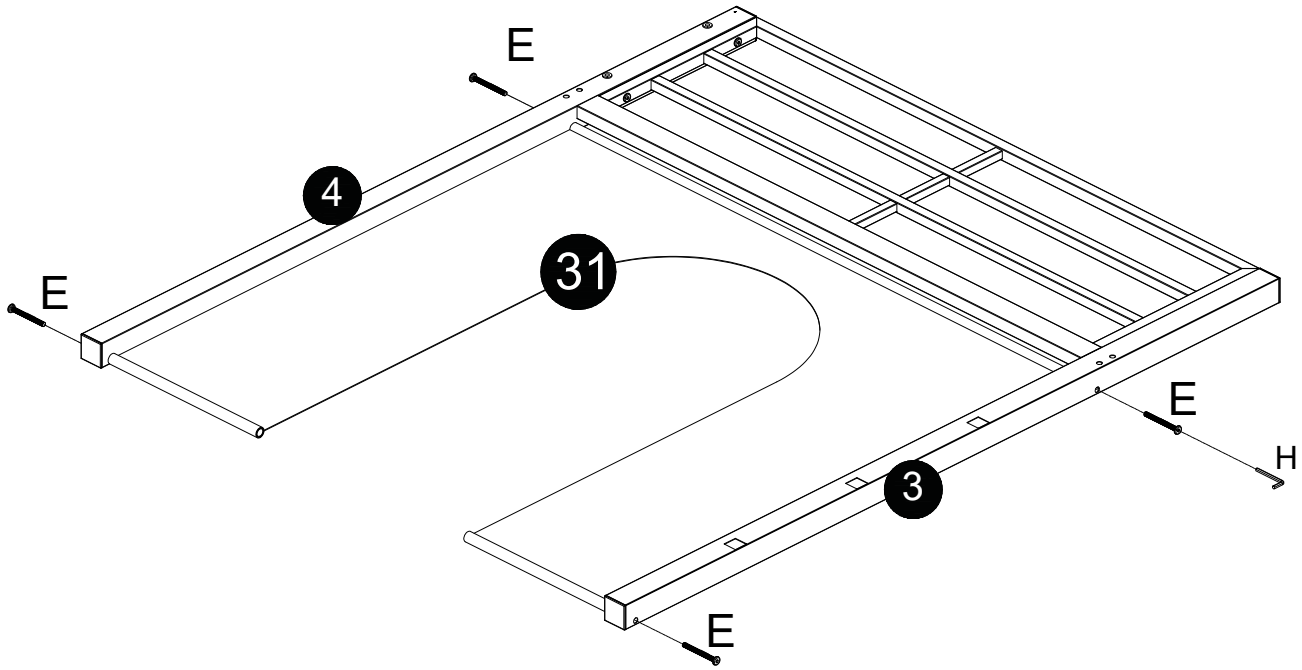

E M6*60	x4

6

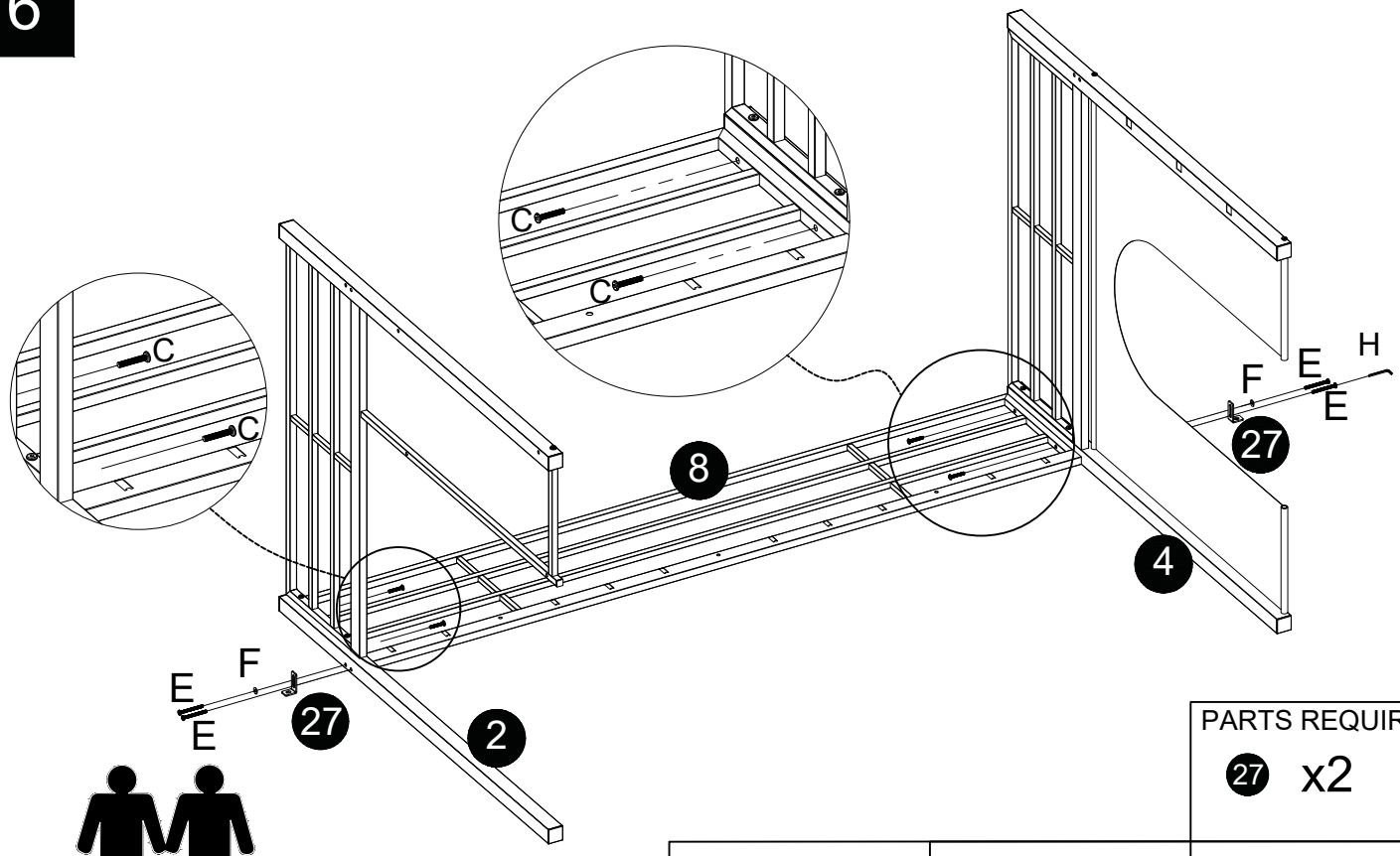

2 PERS.

PARTS REQUIRED	
27	x2

C M6*35	E M6*60	F M6 washer
x4	x4	x2

7

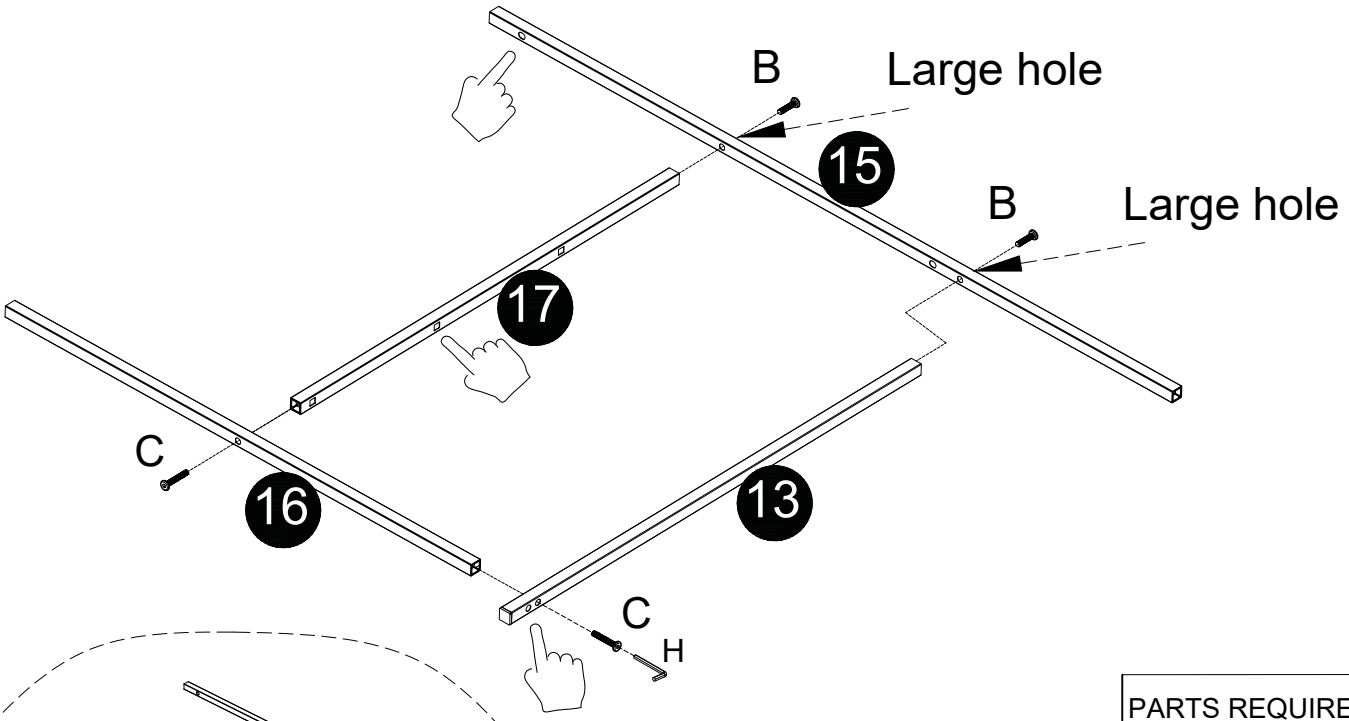

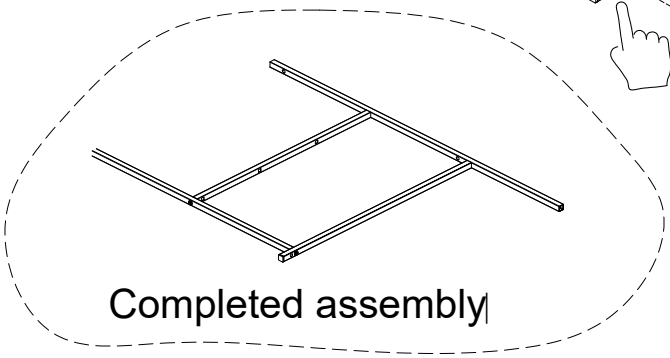

PARTS REQUIRED
13 15 16 17 x1

B M6*24	C M6*35
x2	x2

8

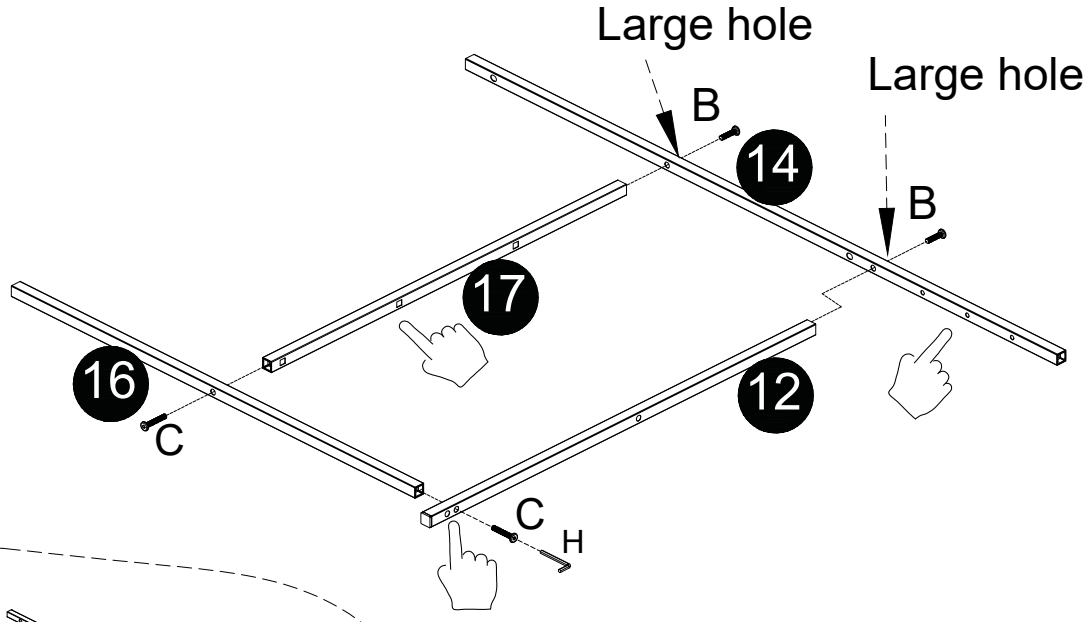

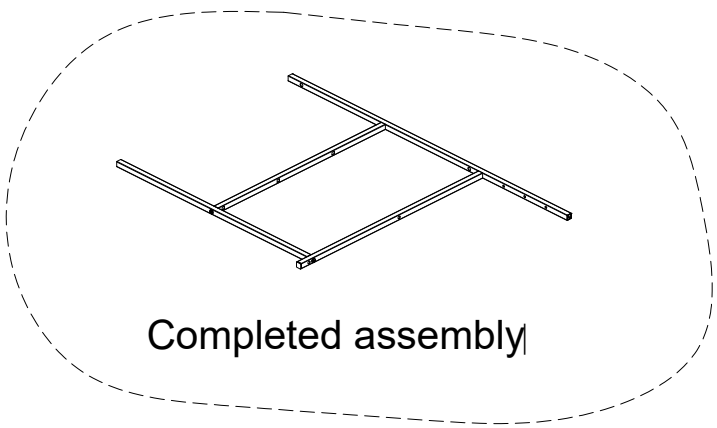

PARTS REQUIRED
12 14 16 17 x1

B M6*24	C M6*35
x2	x2

9

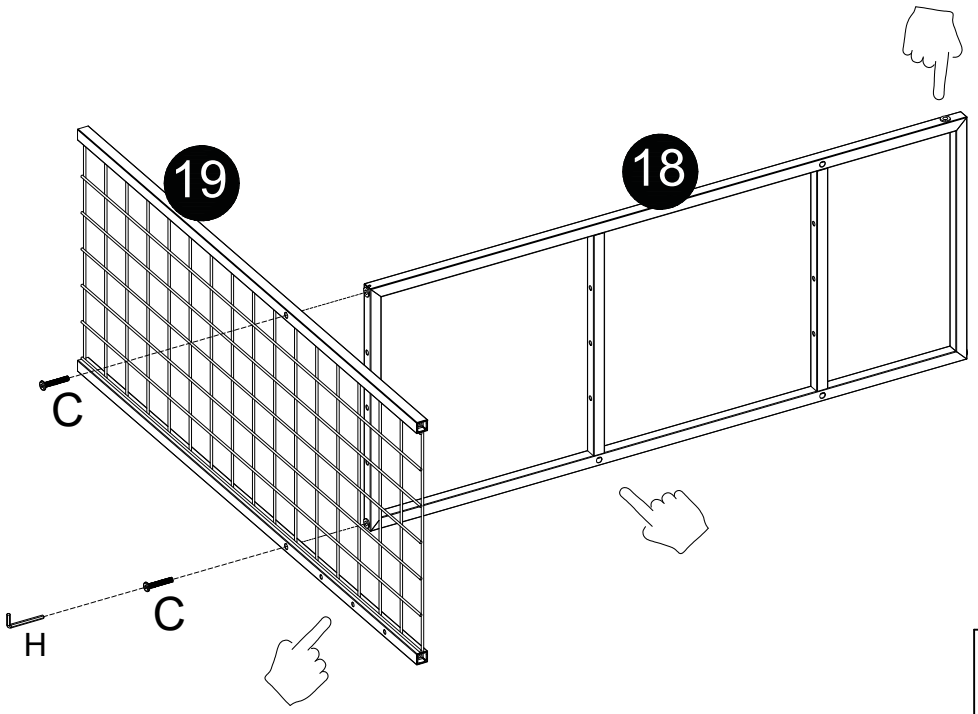

PARTS REQUIRED
18 19 x1
C M6*35 x2

10

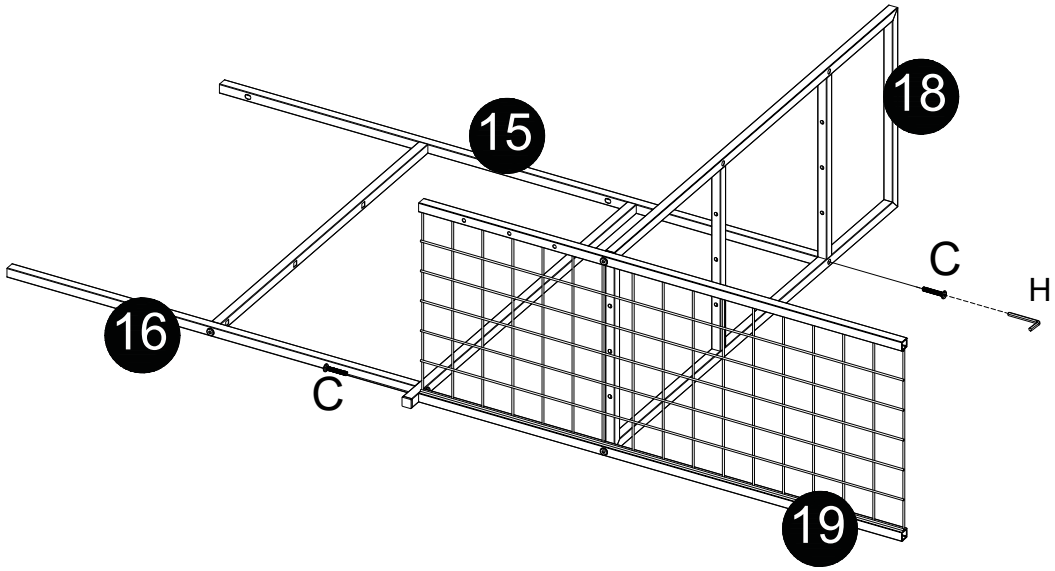

C M6*35 x2

11

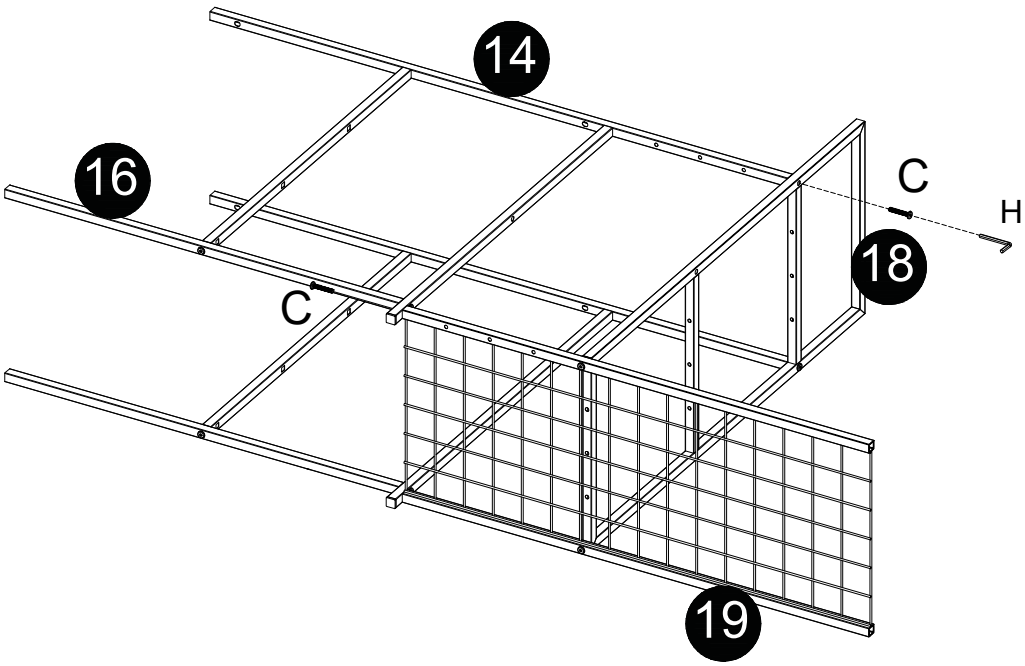

C M6*35
x2

12

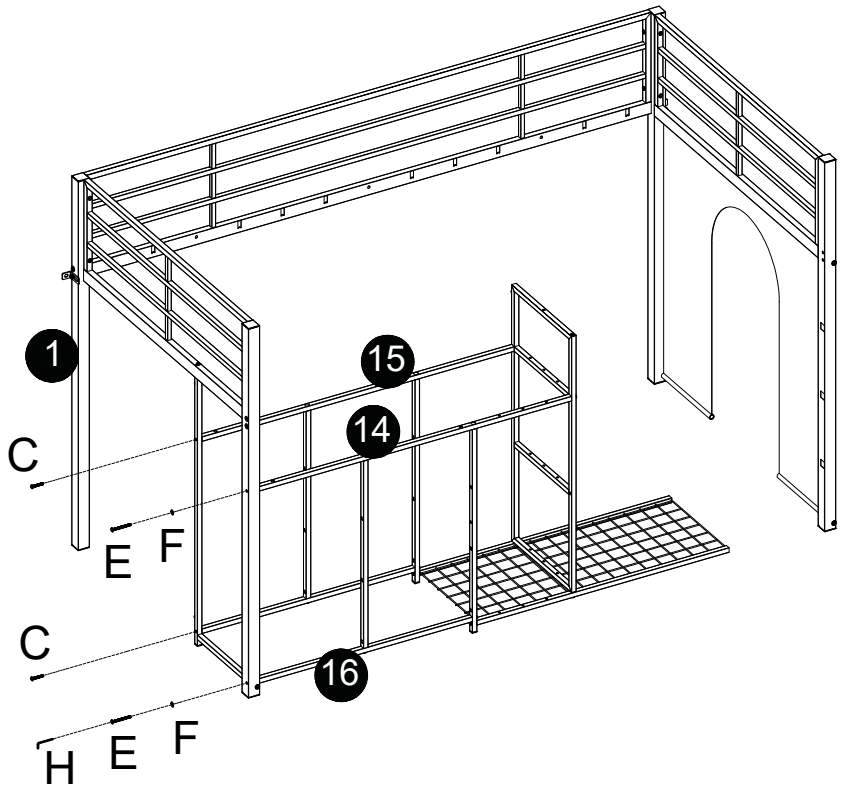

C M6*35
x2

E M6*60	F M6 washer
x2	x2

13

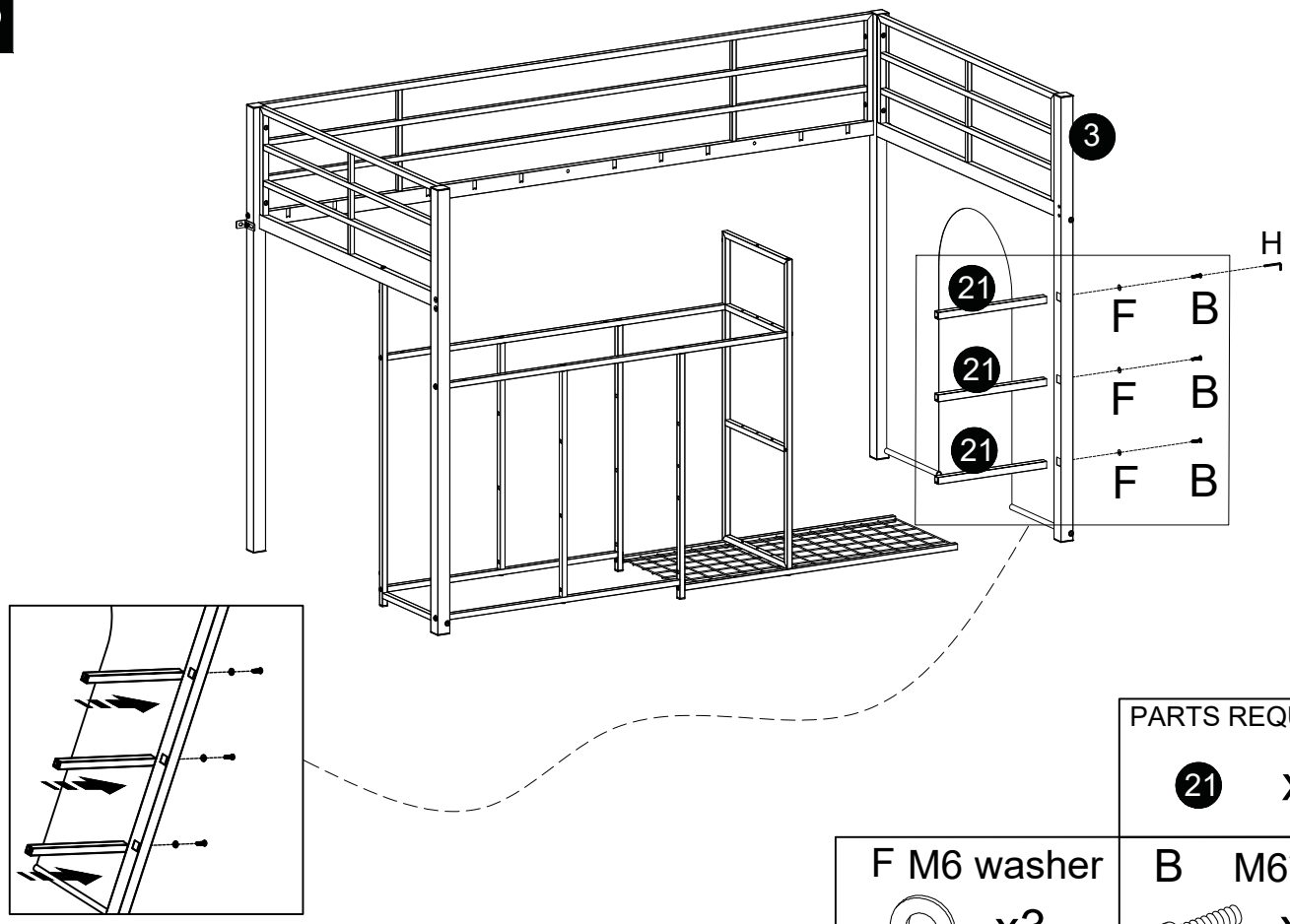

PARTS REQUIRED	
21	x3

F M6 washer	B M6*24
x3	x3

14

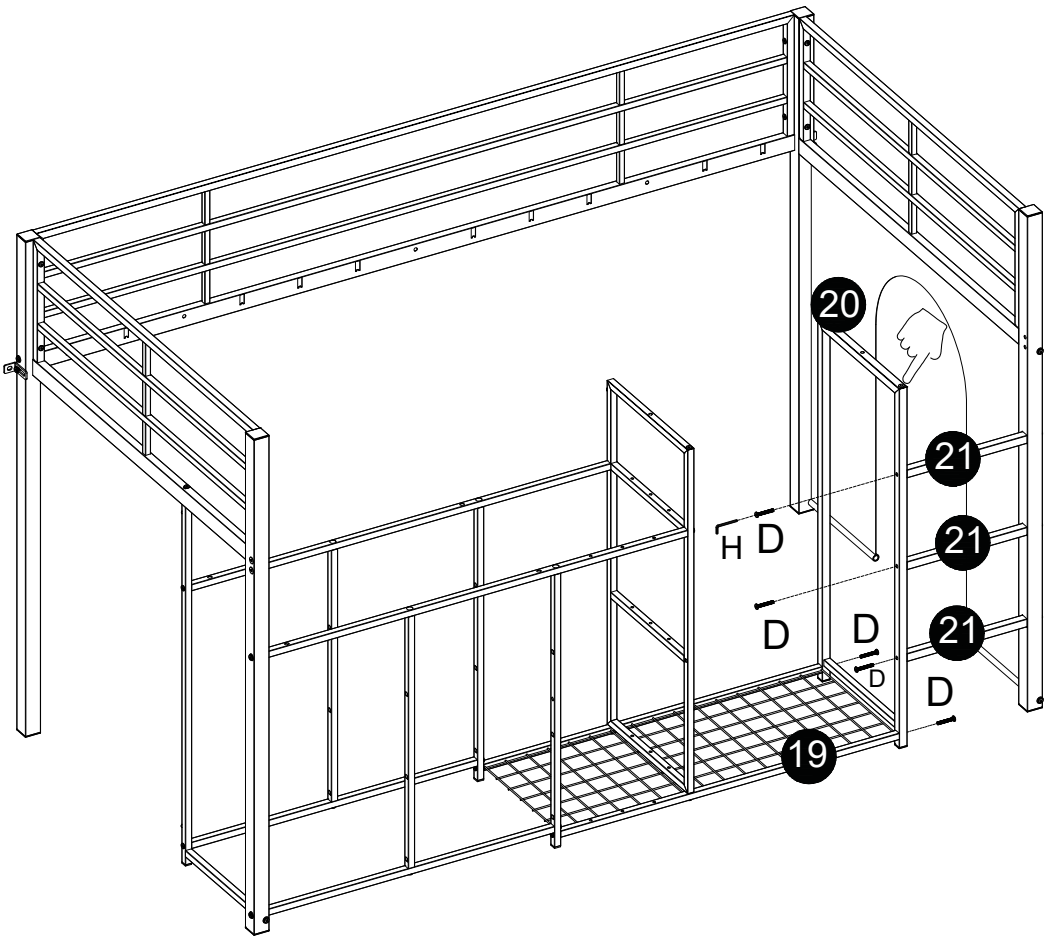

PARTS REQUIRED	
20	x1

D M6*40
x5

15

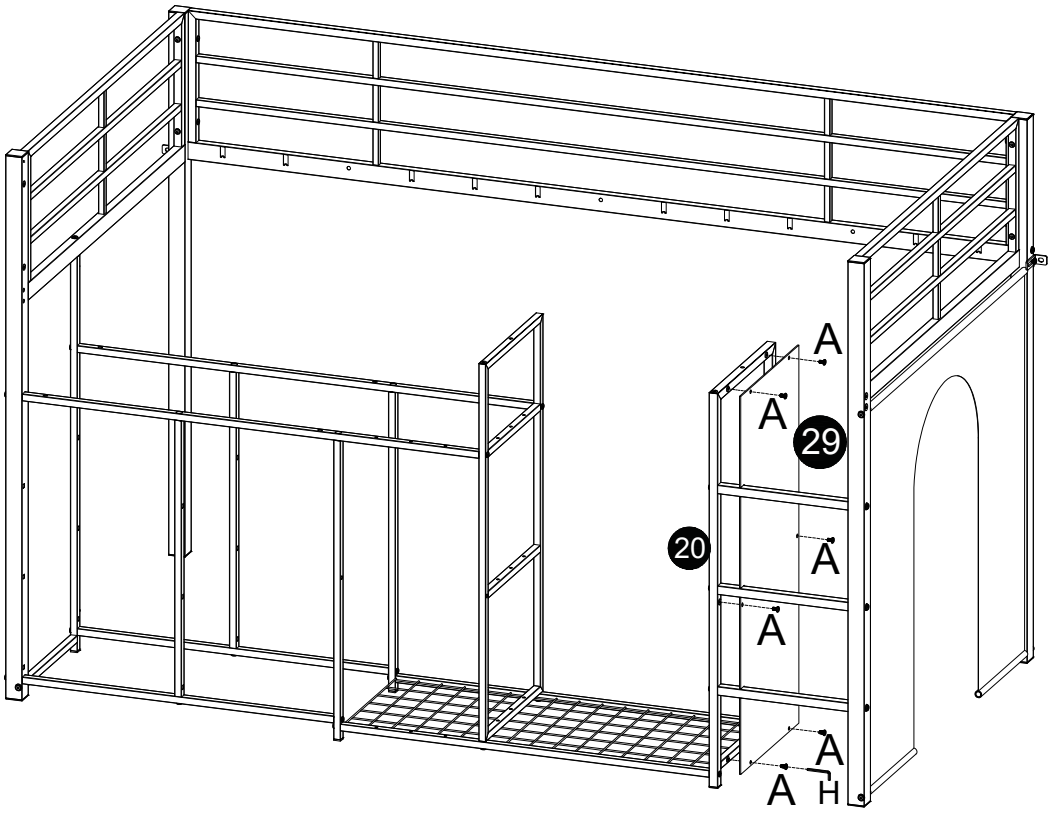

PARTS REQUIRED	
29	x1

A M6*13	
	x6

16

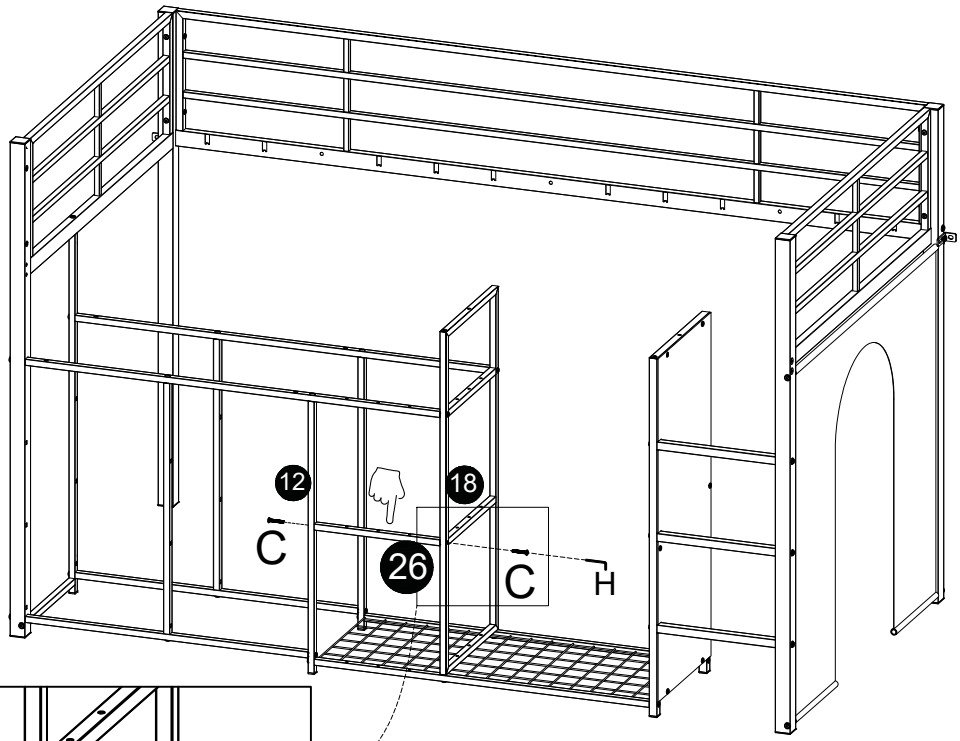

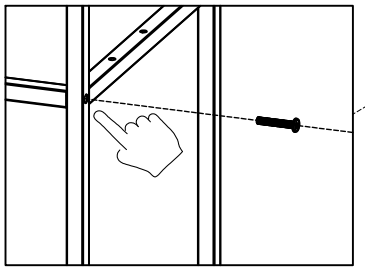

PARTS REQUIRED	
26	x1

C M6*35	
	x2

17

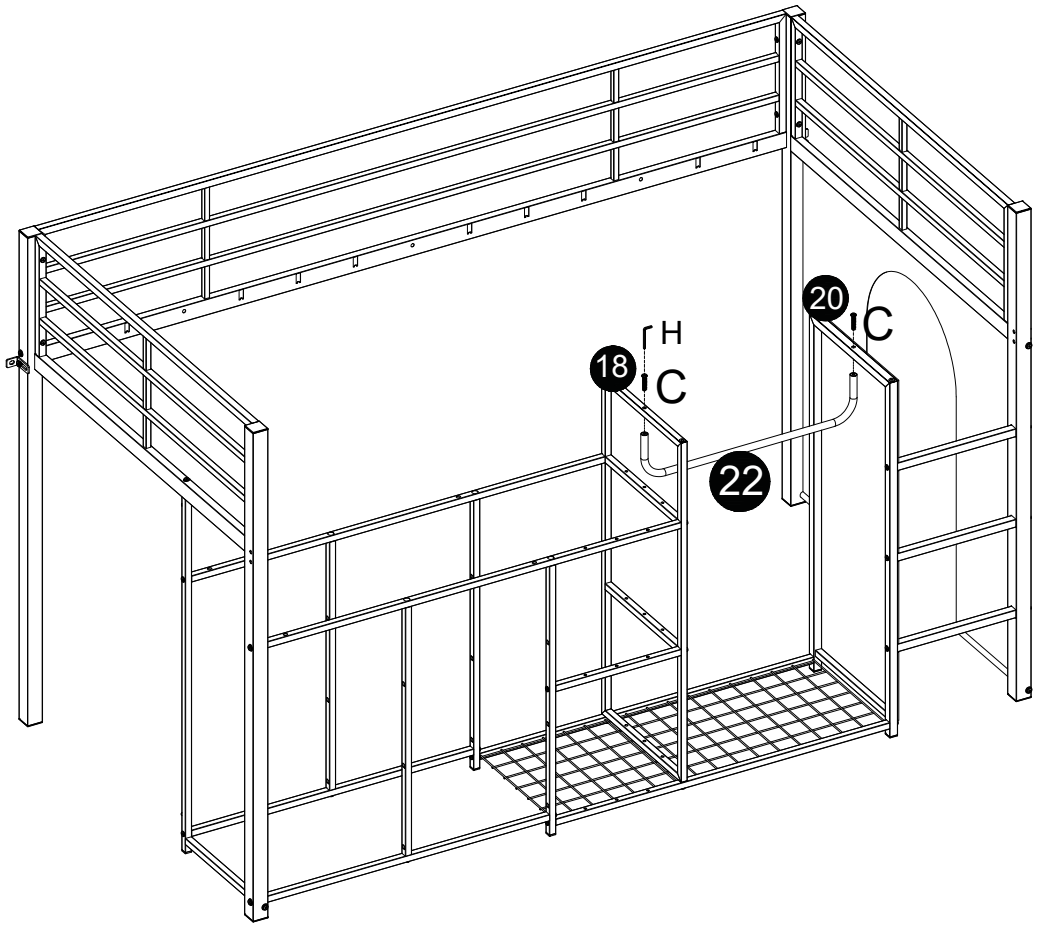

PARTS REQUIRED	
22	x1
C M6*35	x2

18

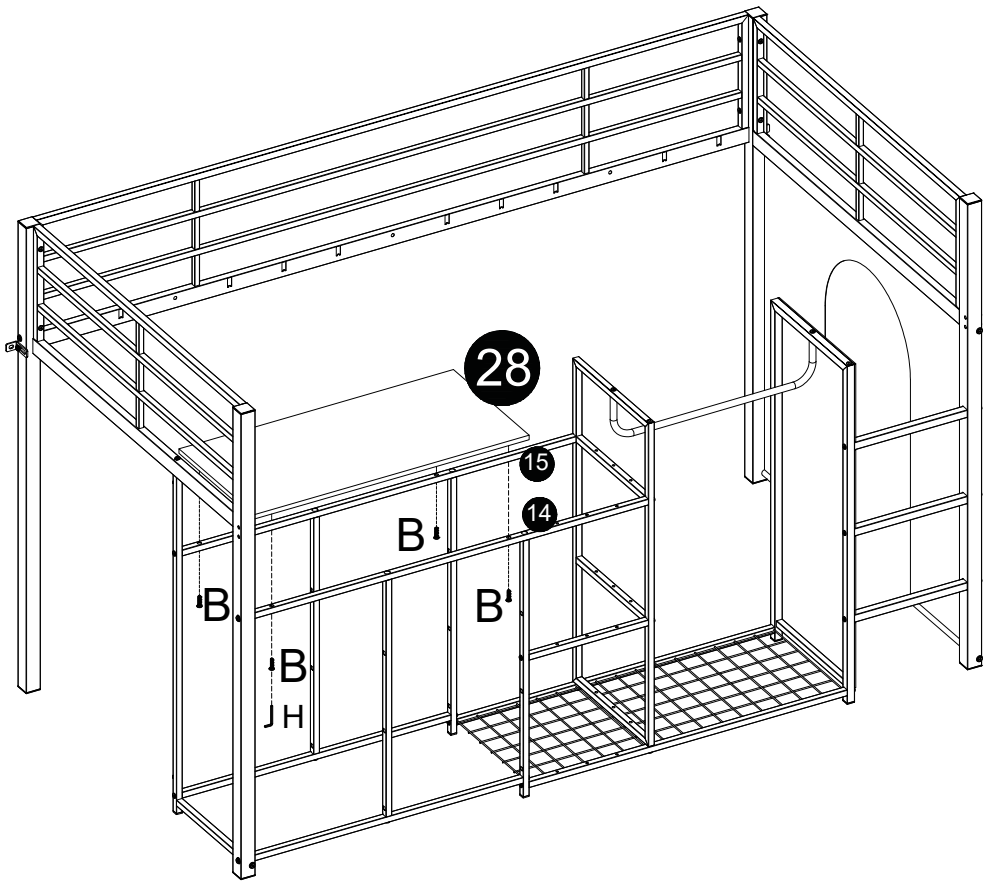

PARTS REQUIRED	
28	x1
B M6*24	x4

19

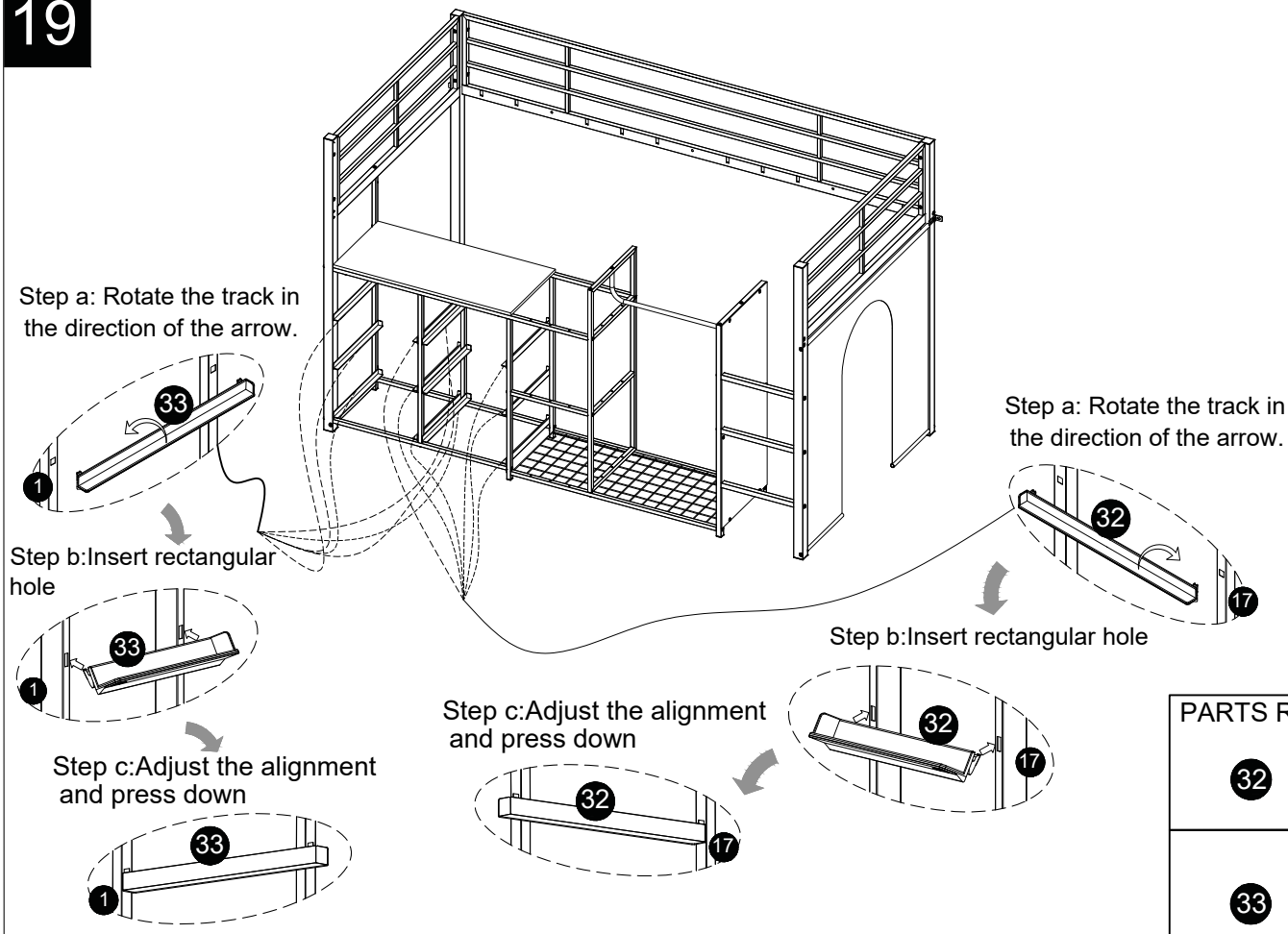

PARTS REQUIRED	
32	x6
33	x6

20

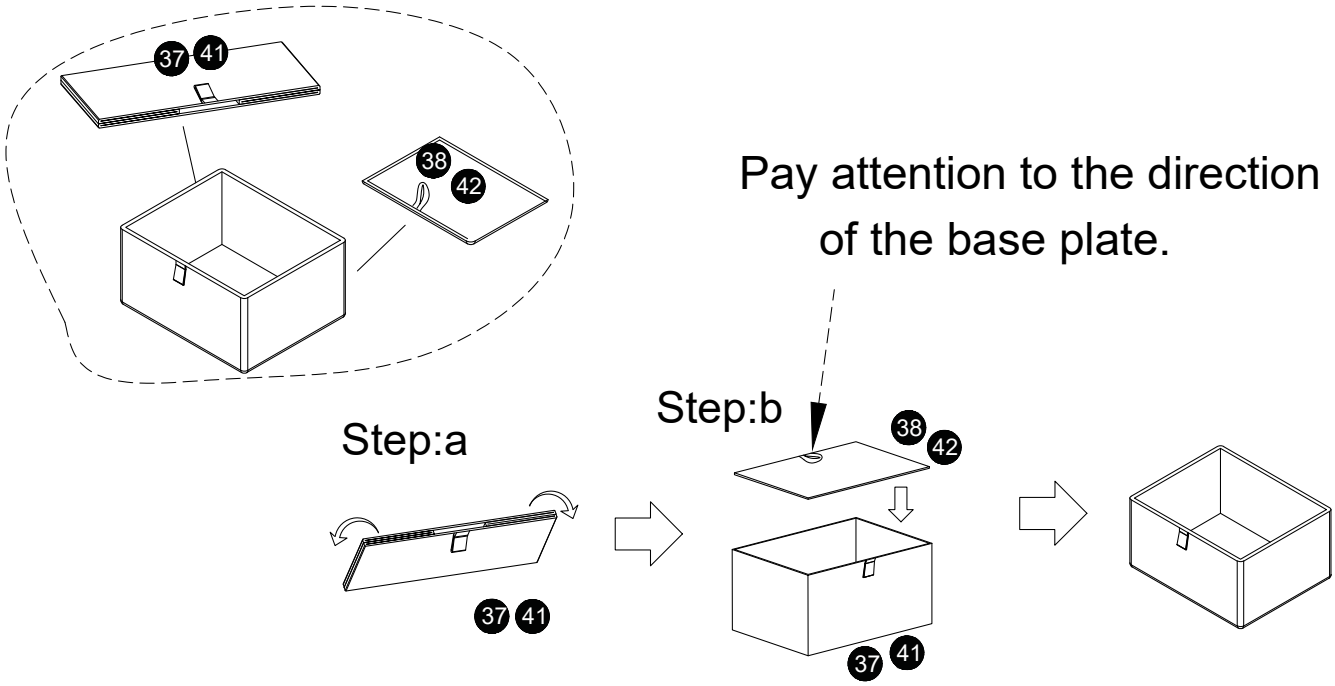

PARTS REQUIRED	
37 41	x3
38 42	x3

21

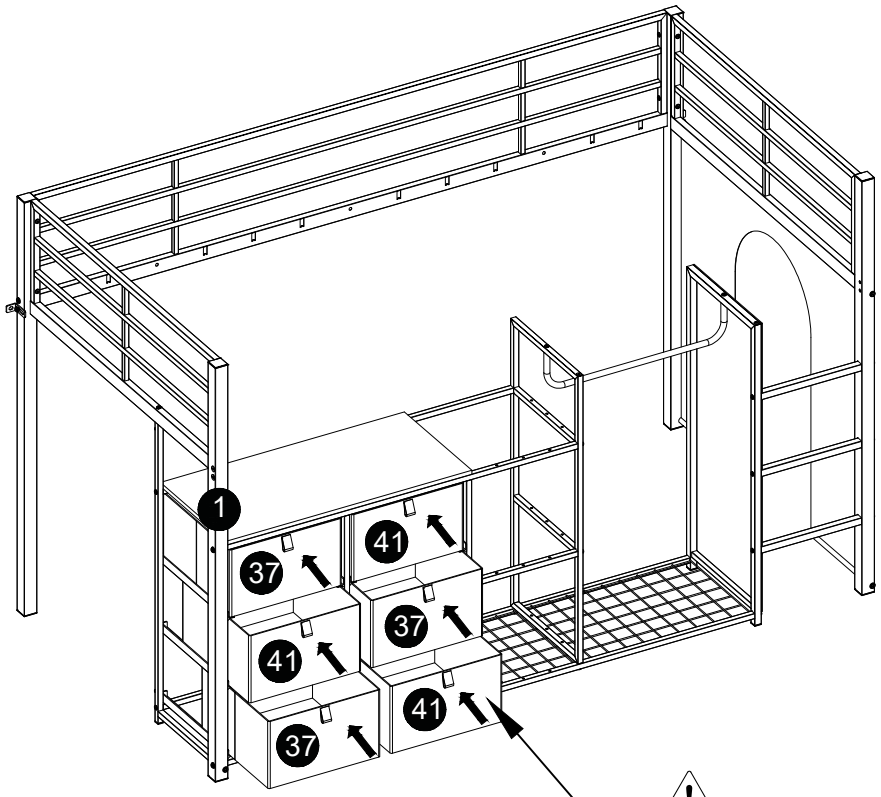

The drawer is balanced and pushed inward

22

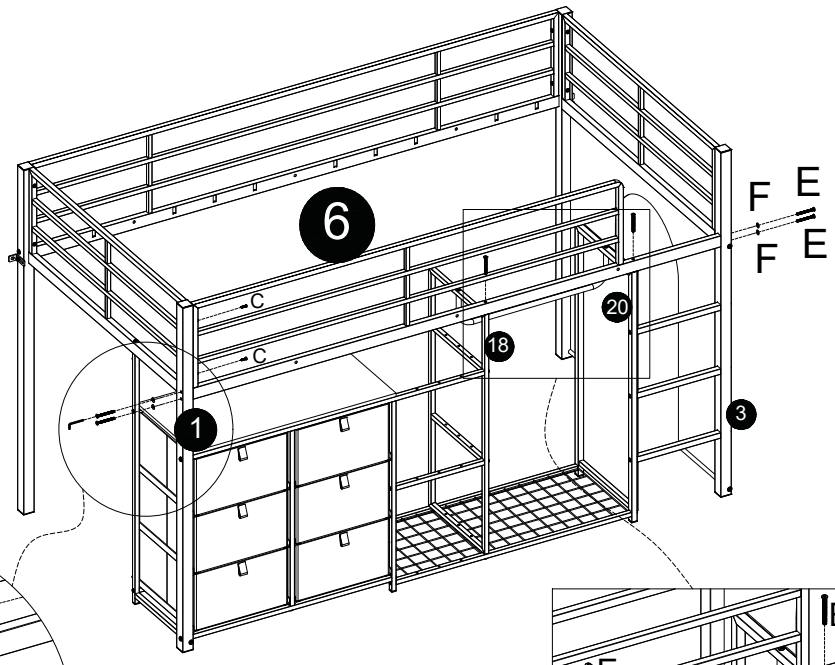

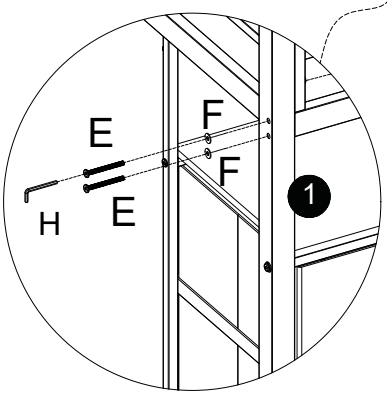

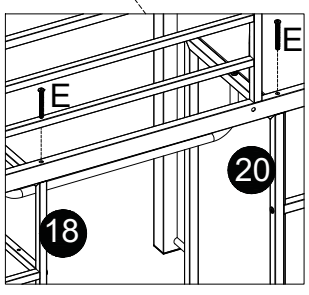

PARTS REQUIRED

6 x1

C M6*35 x2

E M6*60 x6

F M6 washer x4

23

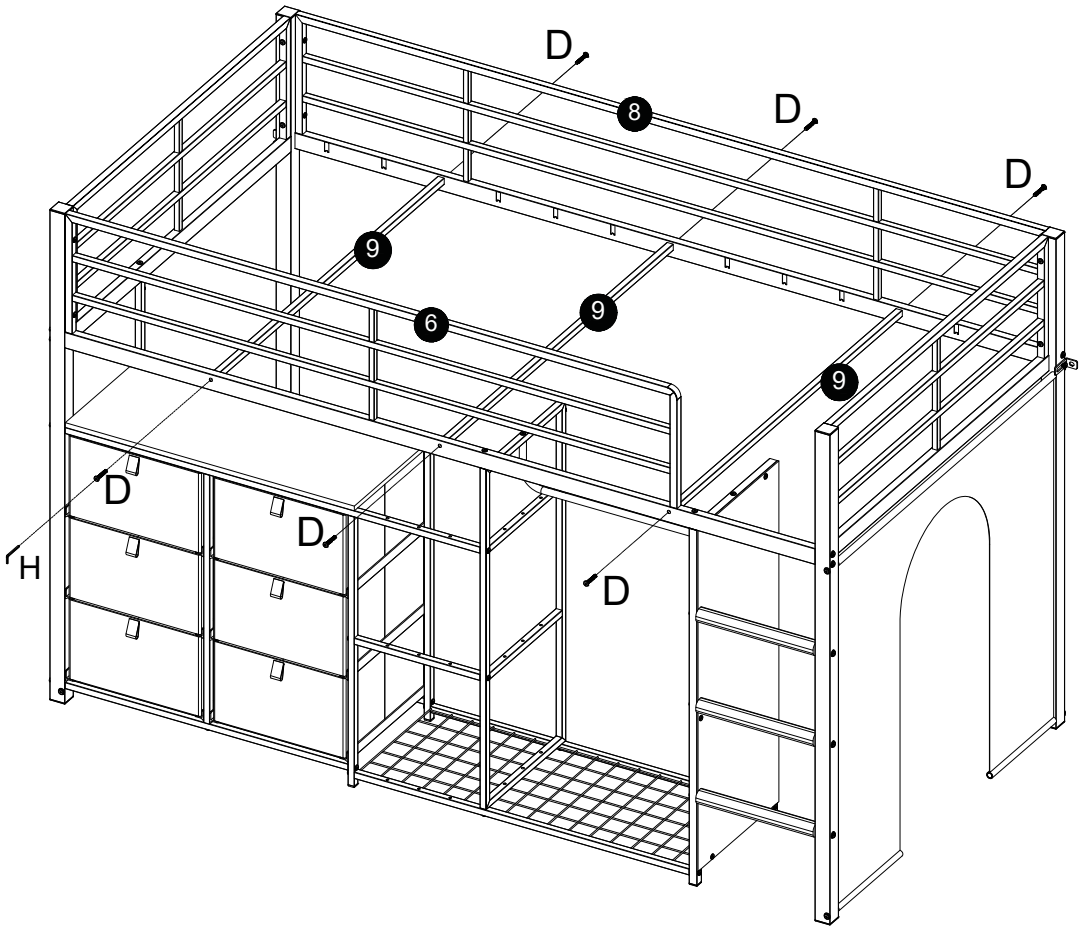

PARTS REQUIRED

9 x3

D M6*40

x6

24

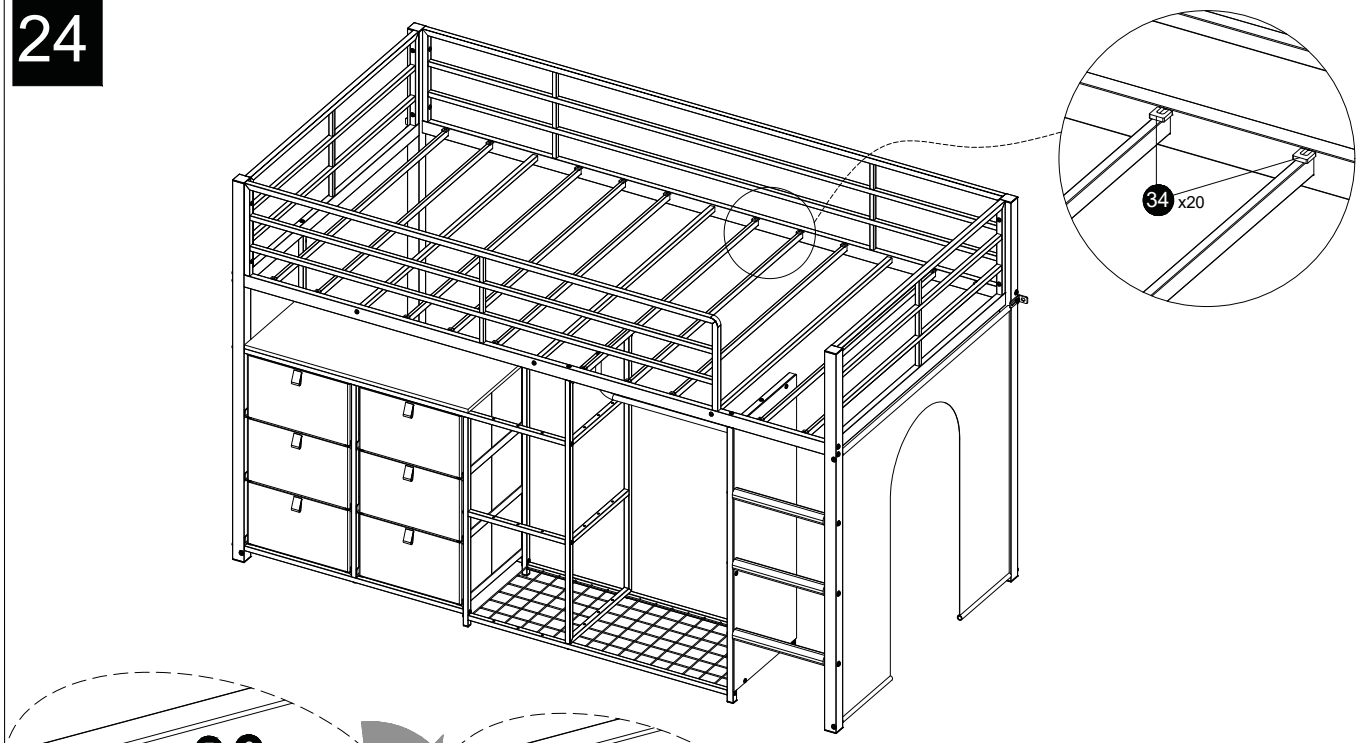

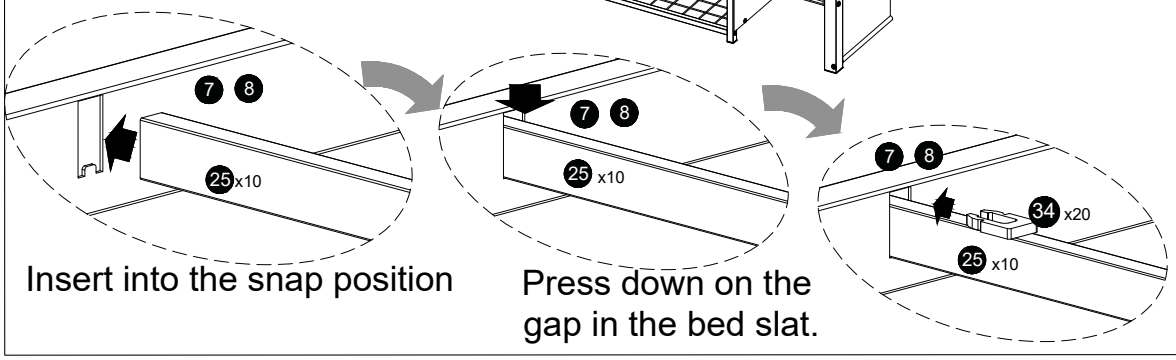

Insert into the snap position

Press down on the gap in the bed slat.

PARTS REQUIRED

25 x10

34 x20

25

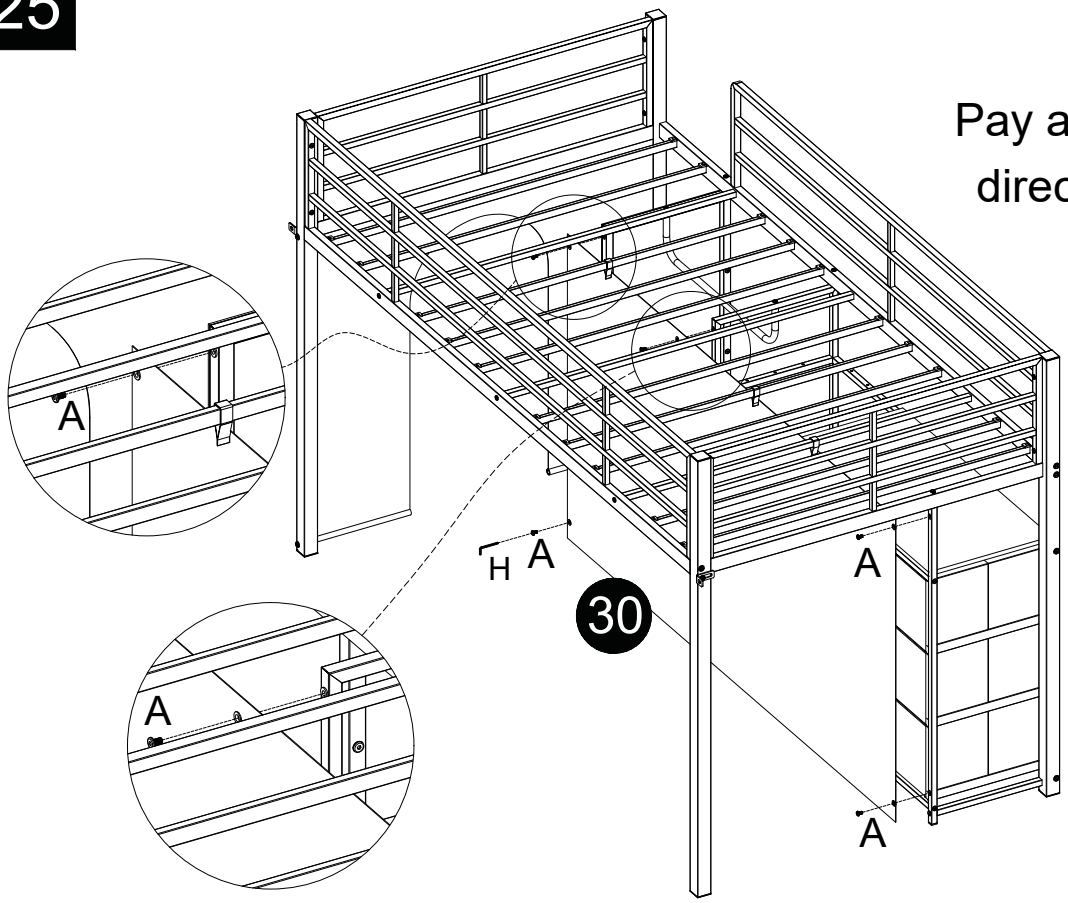

Pay attention to the direction of 30#.

PARTS REQUIRED	
30	x1
A M6*12	x5

26

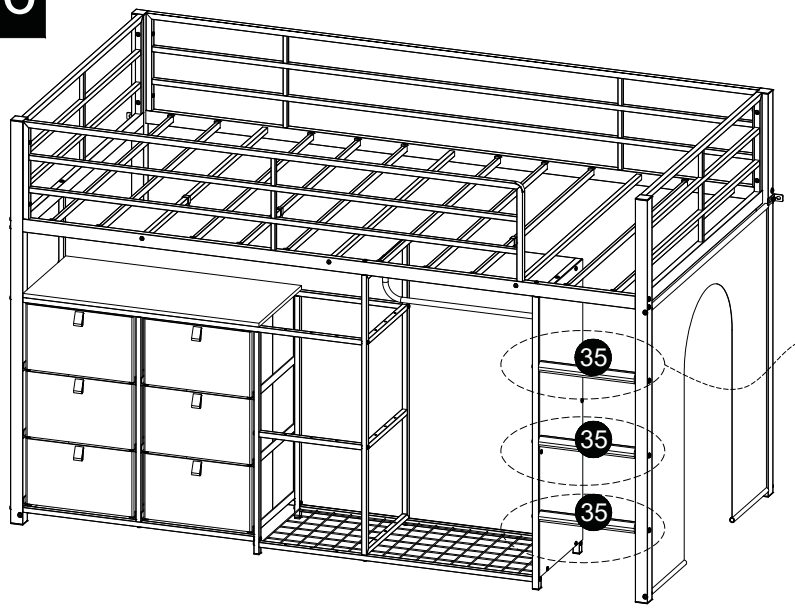

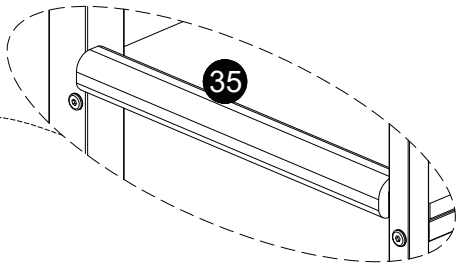

After tearing the tape off the sponge, attach the sponge to the stair tube

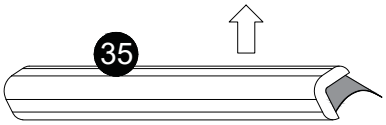

X3

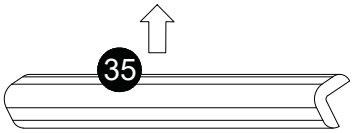

X3

PARTS REQUIRED	
35	x3

27

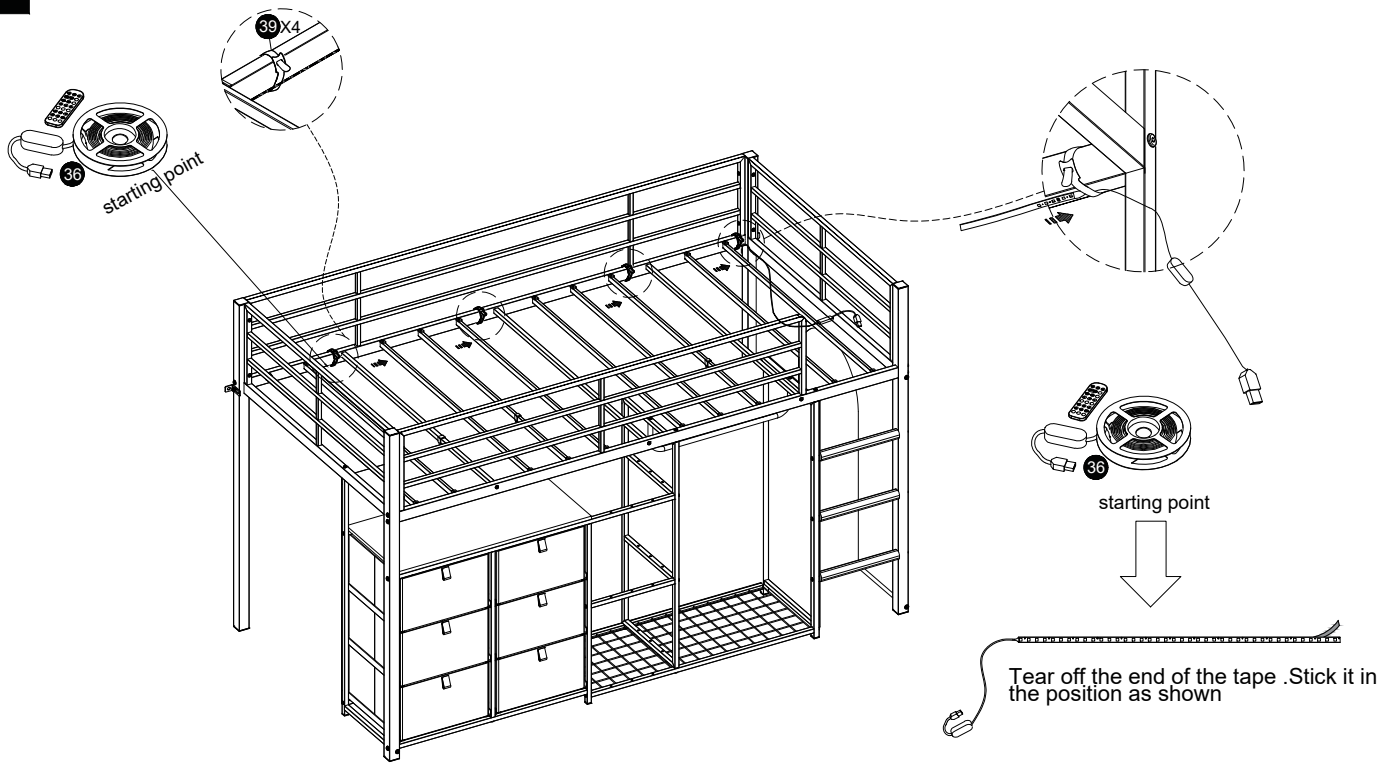

PARTS REQUIRED

36 39 x1

28

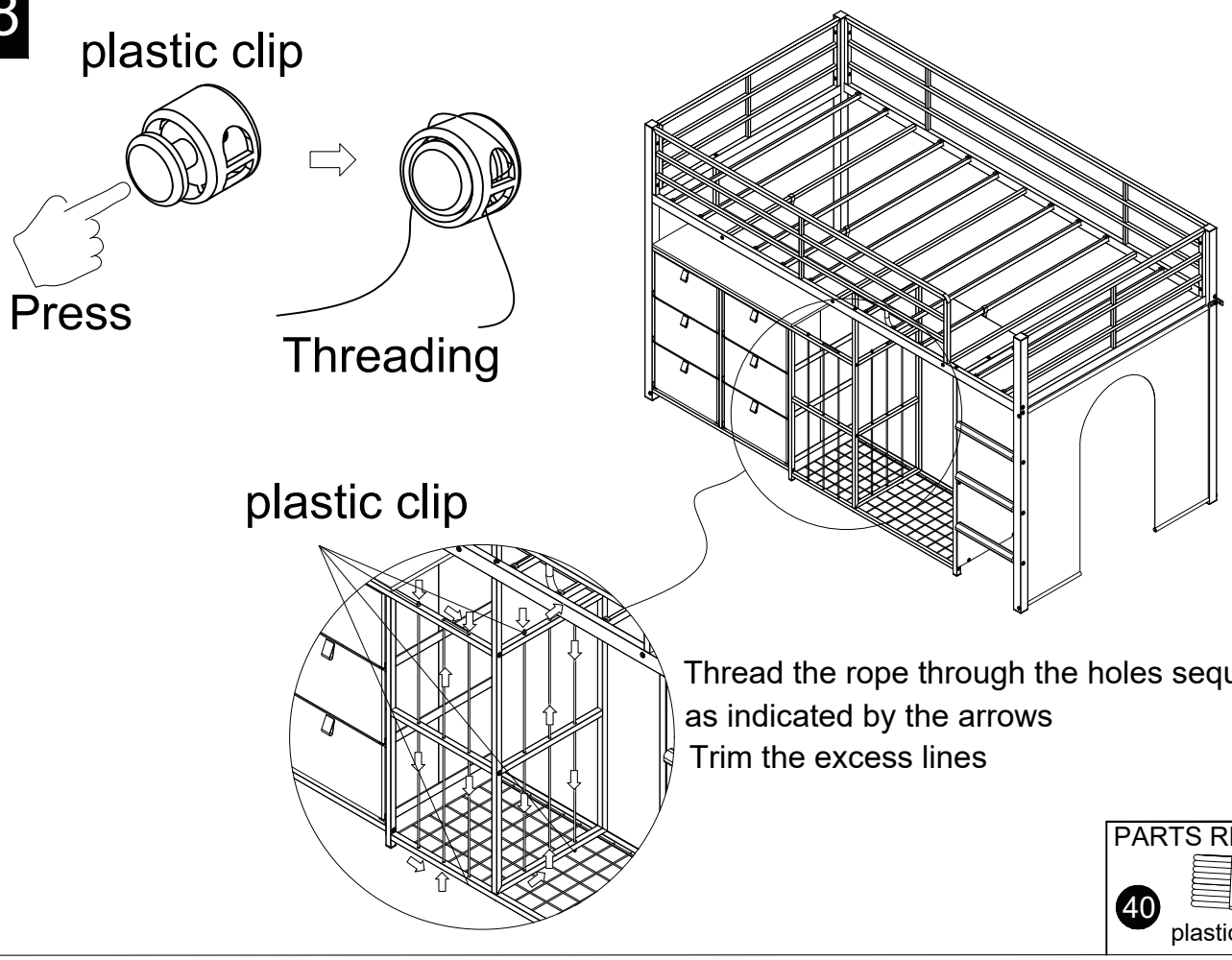

Thread the rope through the holes sequentially as indicated by the arrows

Trim the excess lines

PARTS REQUIRED

40 Line ×2

plastic clip ×4

29

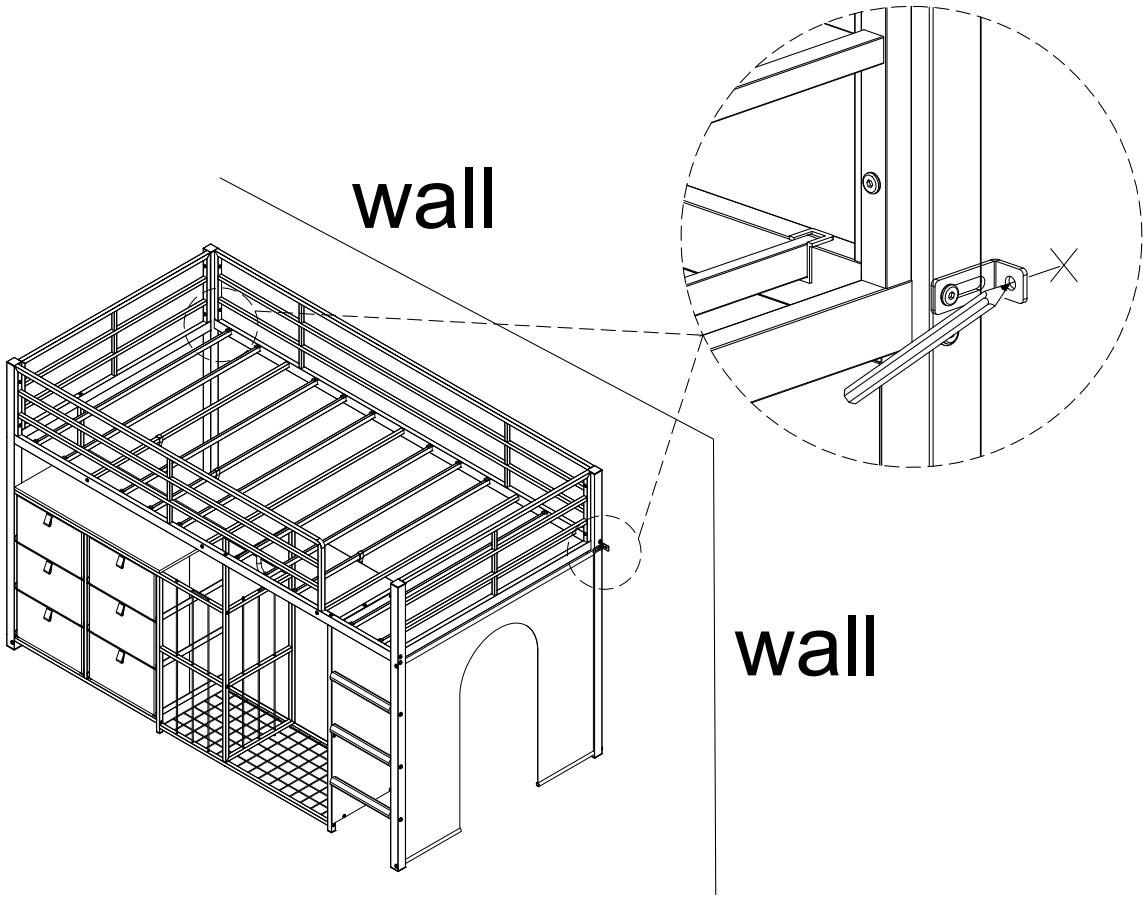

30

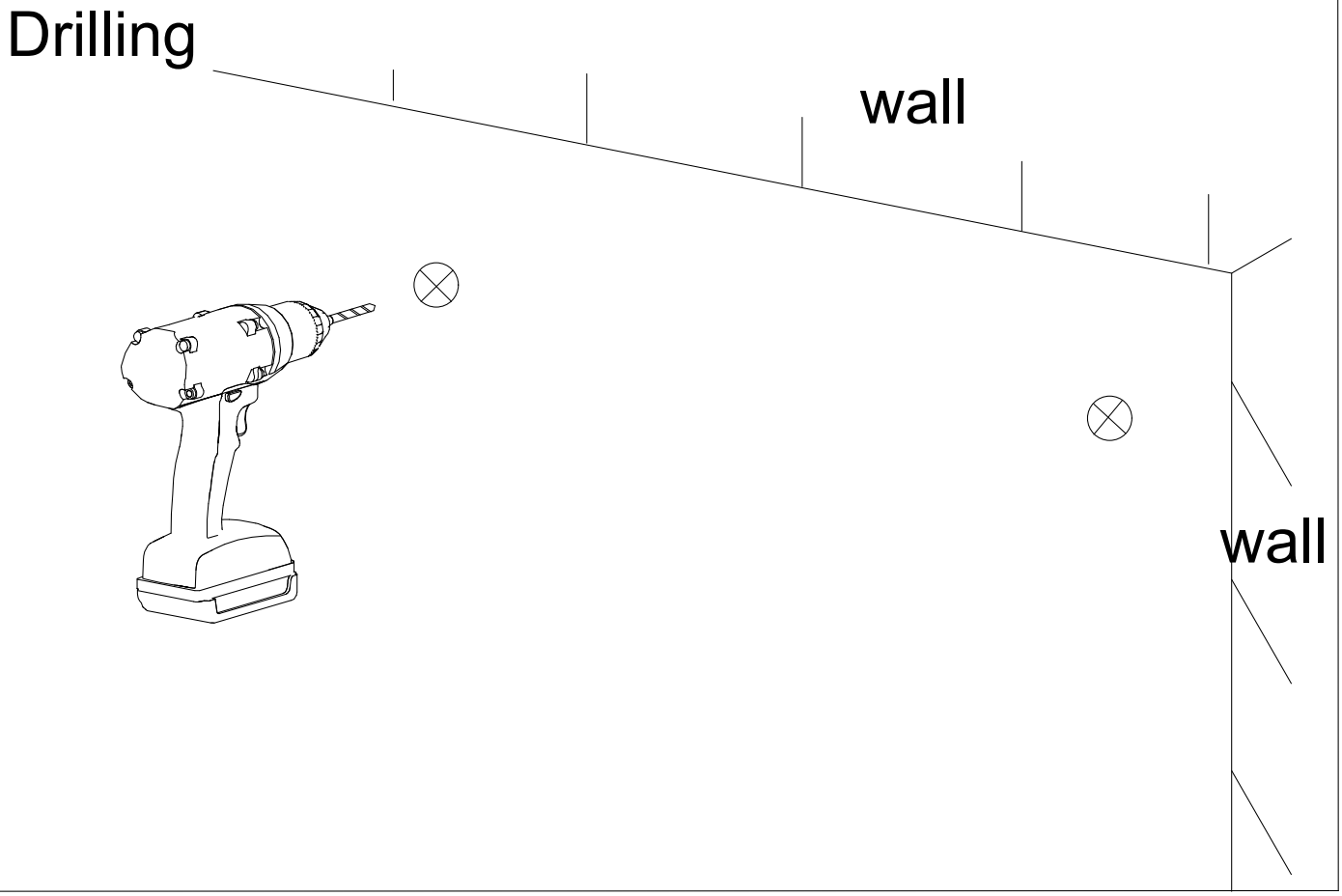

31

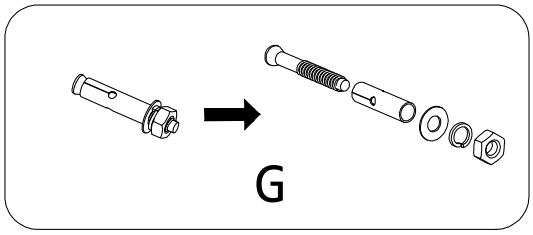

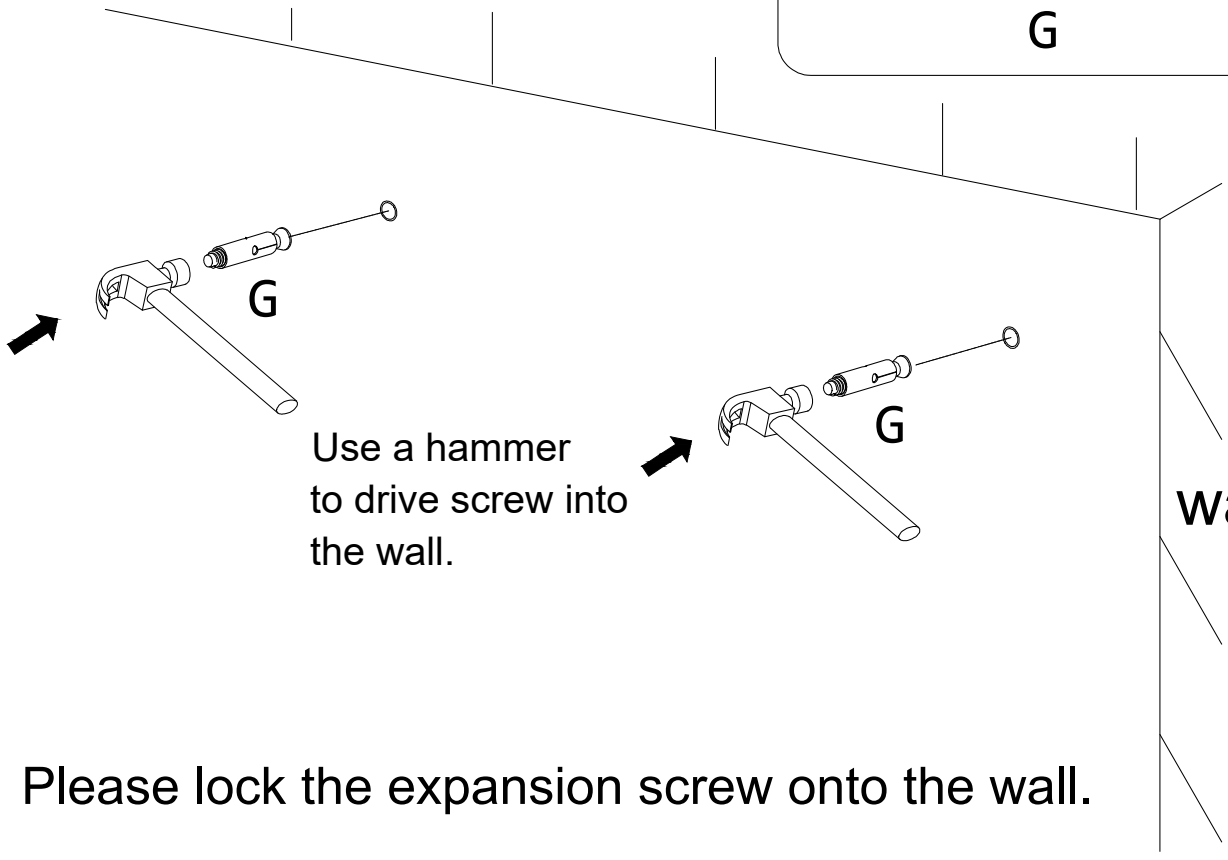

Please lock the expansion screw onto the wall.

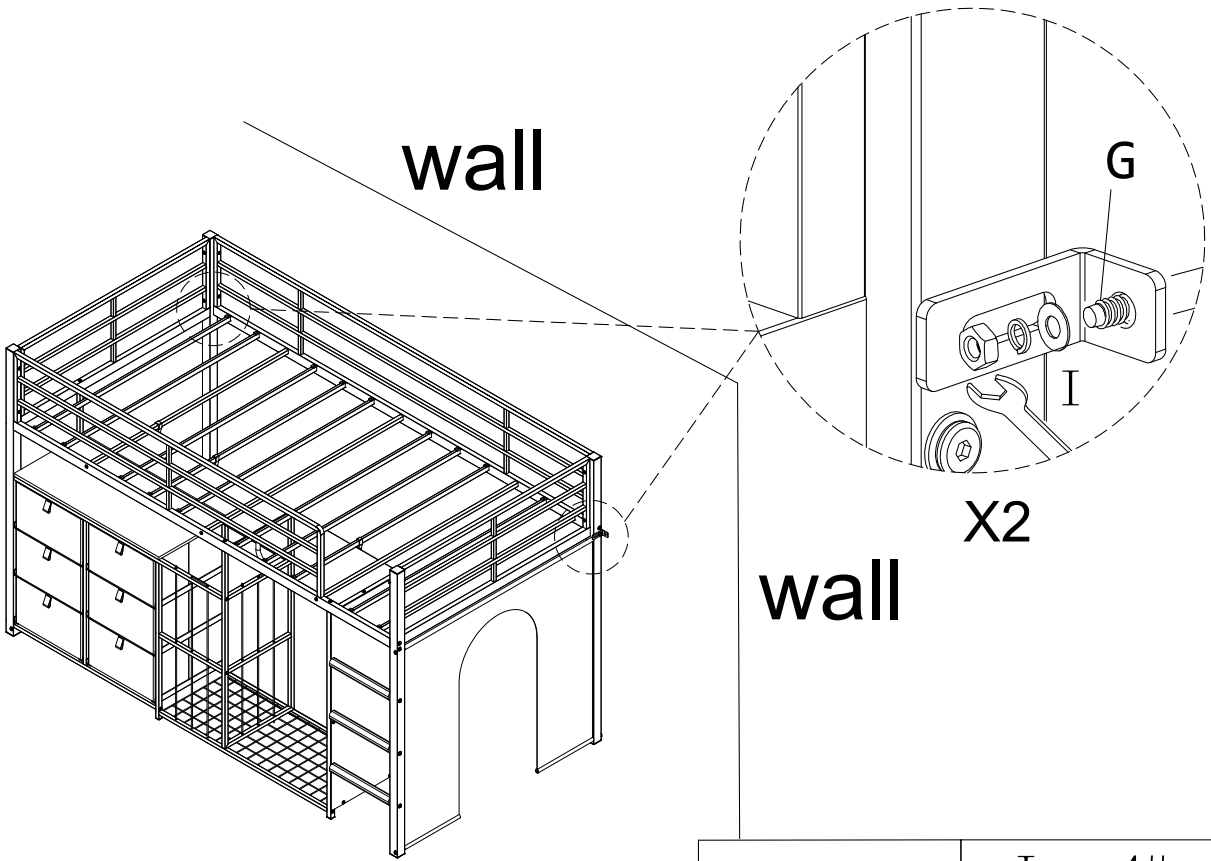

G M6	I 4#
x2	x1