ASSEMBLY INSTRUCTIONS

T-CT26-1499

PF078

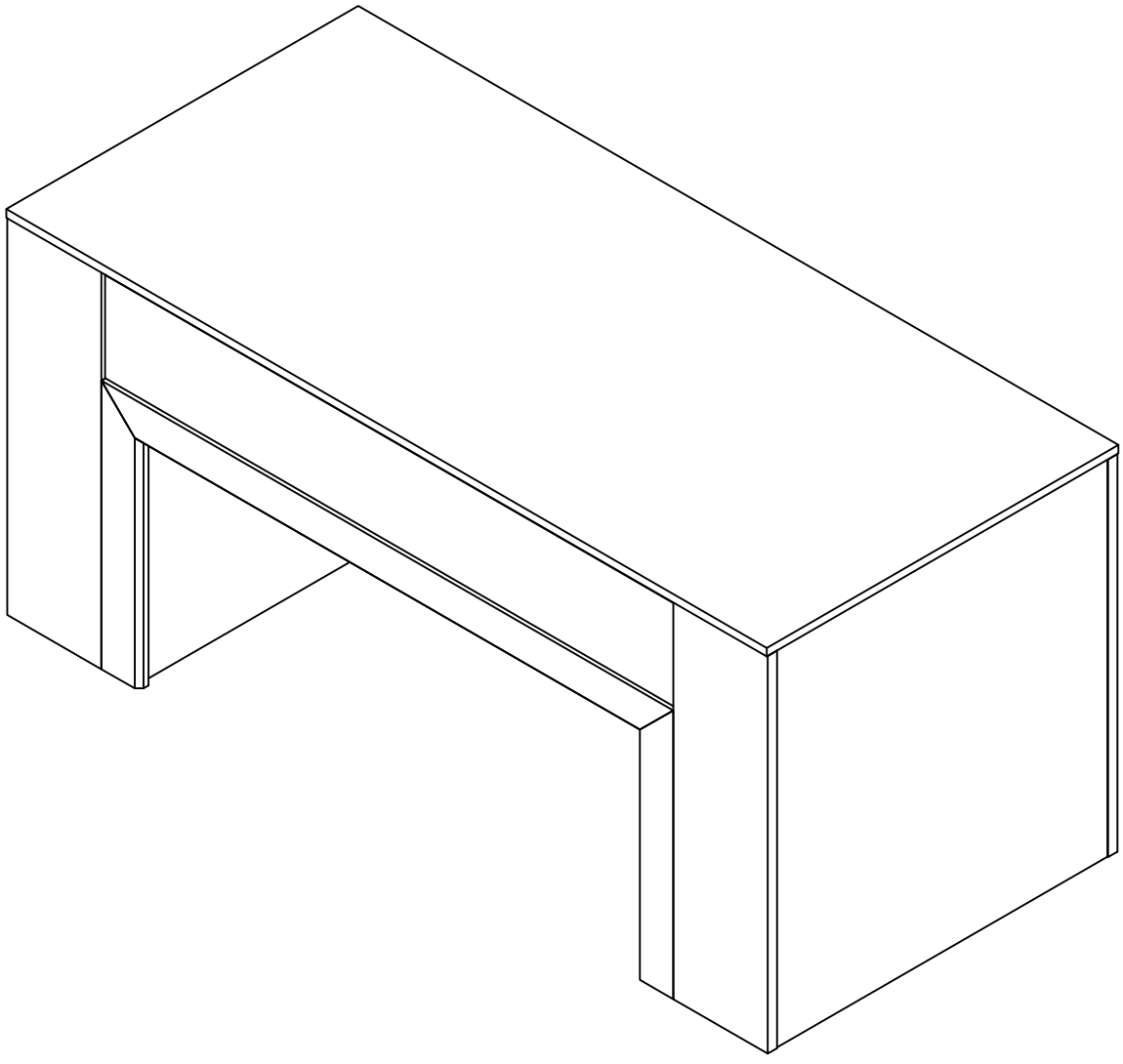

WARNING !

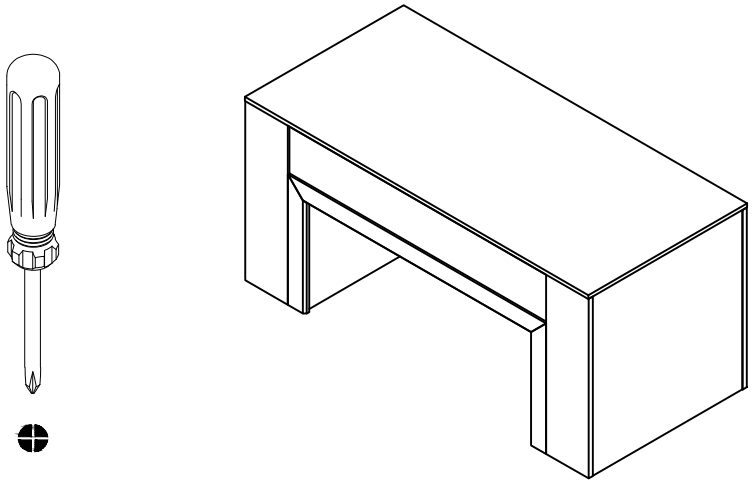

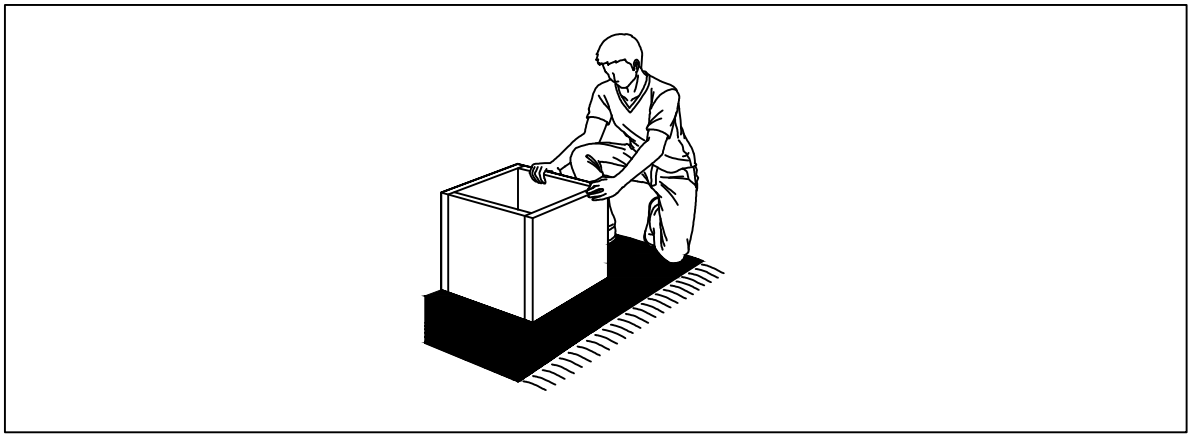

Assembly the furniture on empty carton, carpet, or rug to prevent scratches or damage.

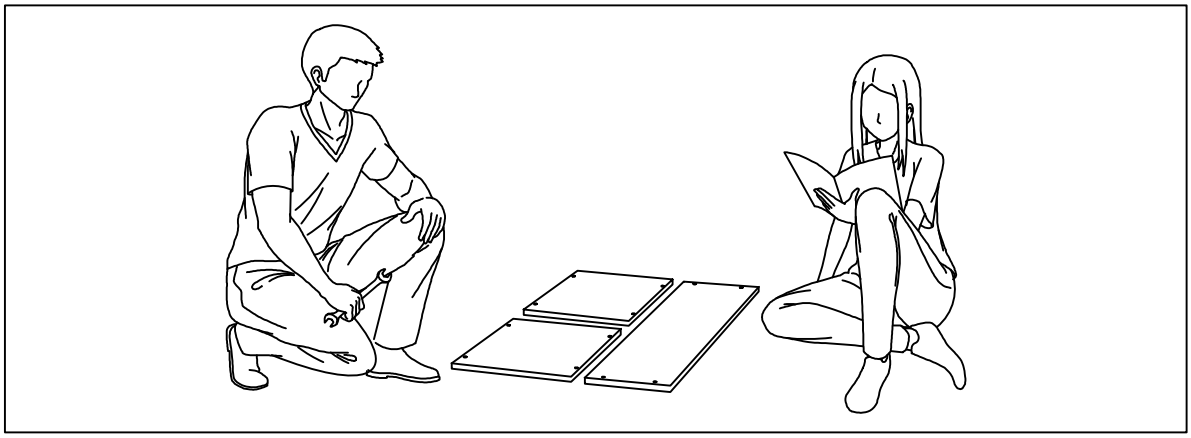

This furniture requires 2 people to assembly.

Make sure no parts are missing or damaged before assembly.

PACKAGE CONTENT

Board Identification

Not actual size

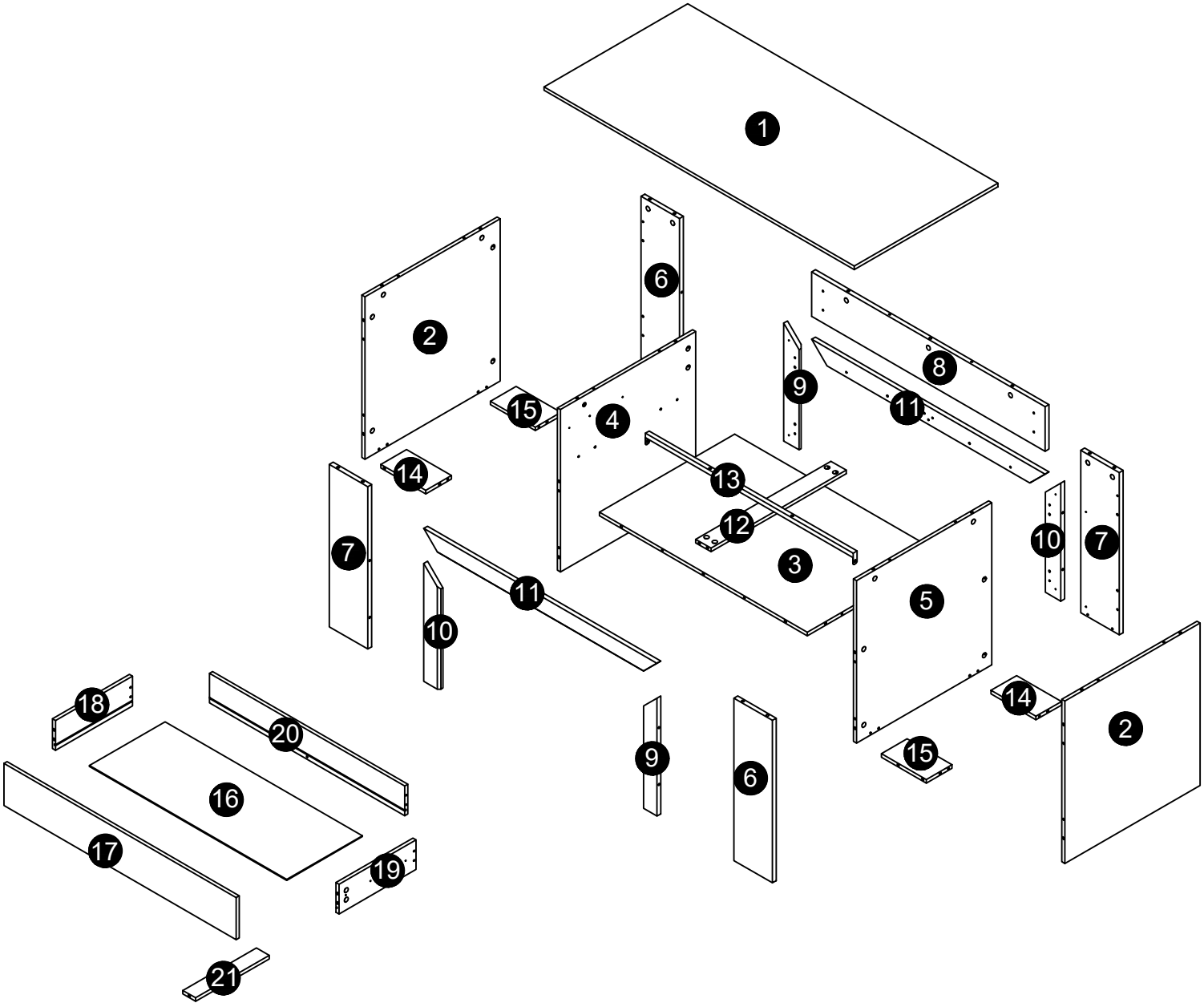

BOARD IDENTIFICATION

Not actual size

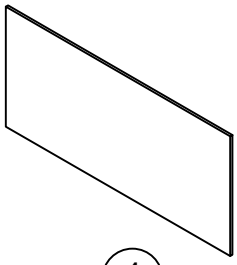

① x1

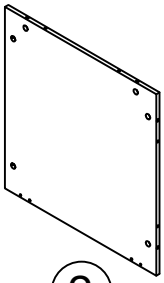

② x2

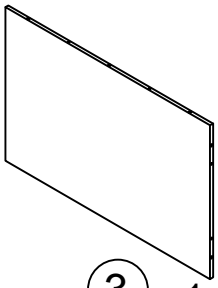

③ x1

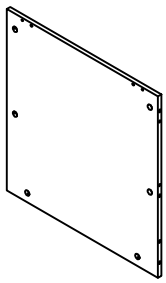

④ x1

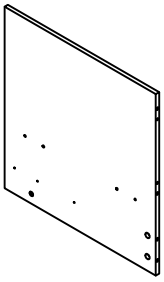

⑤ x1

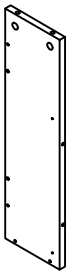

⑥ x2

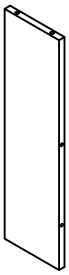

⑦ x2

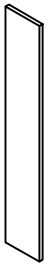

⑧ x1

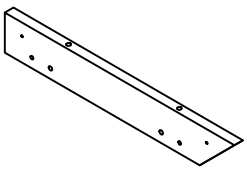

⑨ x2

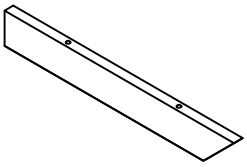

⑩ x2

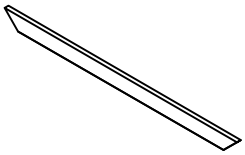

⑪ x2

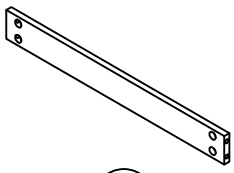

⑫ x1

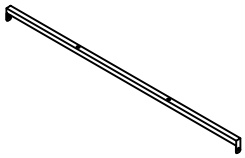

⑬ x1

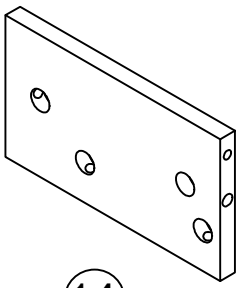

⑭ x2

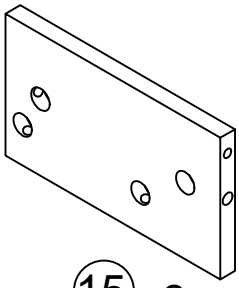

⑮ x2

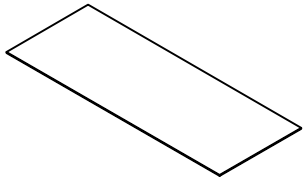

⑯ x1

BOARD IDENTIFICATION

Not actual size

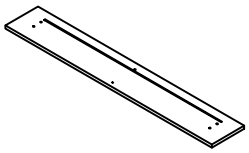

17 x1

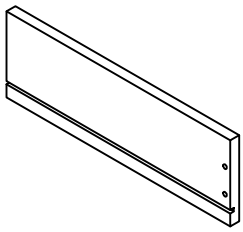

18 x1

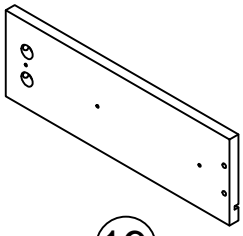

19 x1

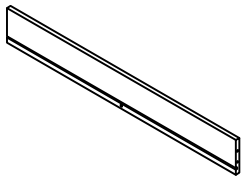

20 x1

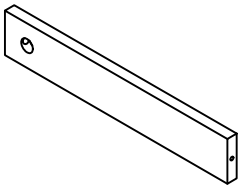

21 x1

HARDWARE LIST



A	x74+2

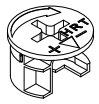

Ø15x9.5

B	x74+2

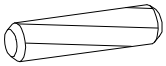

Ø6x30

C	x50+2



Ø5x40

D	x5+1



Ø3.5x12

E	x29+2



M6x10

F	x2+1



Ø20

G	x74+2

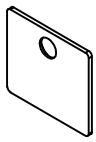

H	x1

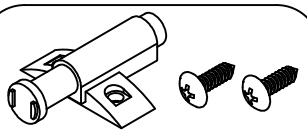

I-1 I-2

I	x1

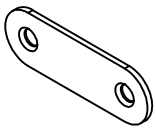

J	x8

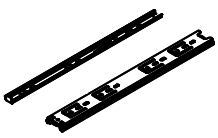

K	x2



M6x25

L	x2+1

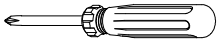

M	x1

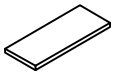

10x40x2mm

N	x8+1

Cam Lock Fastening System

Insert the cam bolt into the hole first, then insert the cam lock and lock it.

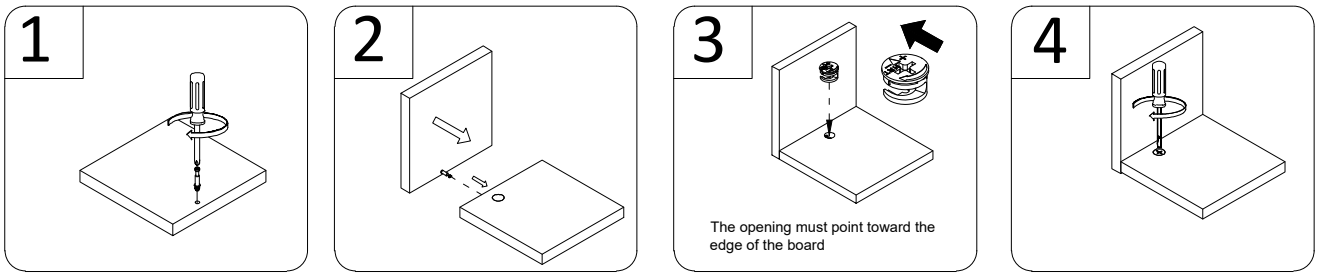

Three-section slide rail instructions
Instructions pour rail coulissant trois sections

TIPS

How To Separate A Ball Bearing Slider

1) Pull toward arrow to open the slider until it's stops and then flip it over

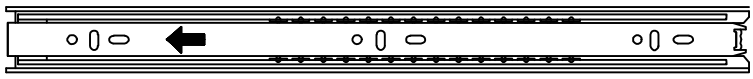

2) Push plastic lever down and pull apart the slider at the same time

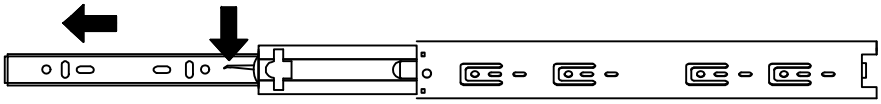

3) After disassembly

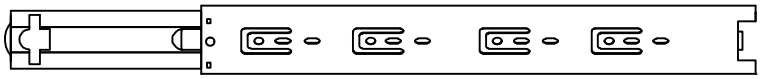

OUTER TRACK K-2

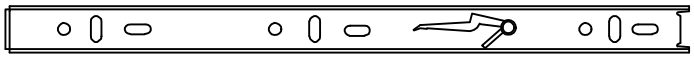

INNER TRACK K-1

How to Assemble the Slider

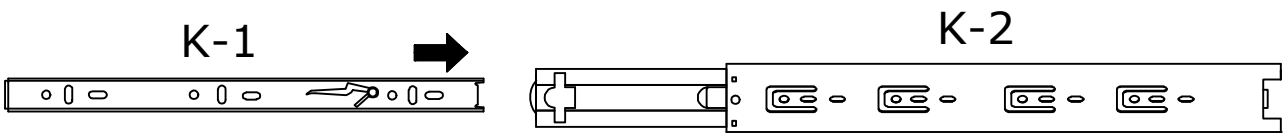

Align the outer track(K-2) with the center of the inner track(K-1) and push in.

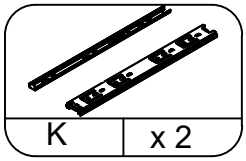

STEP 1

PF078

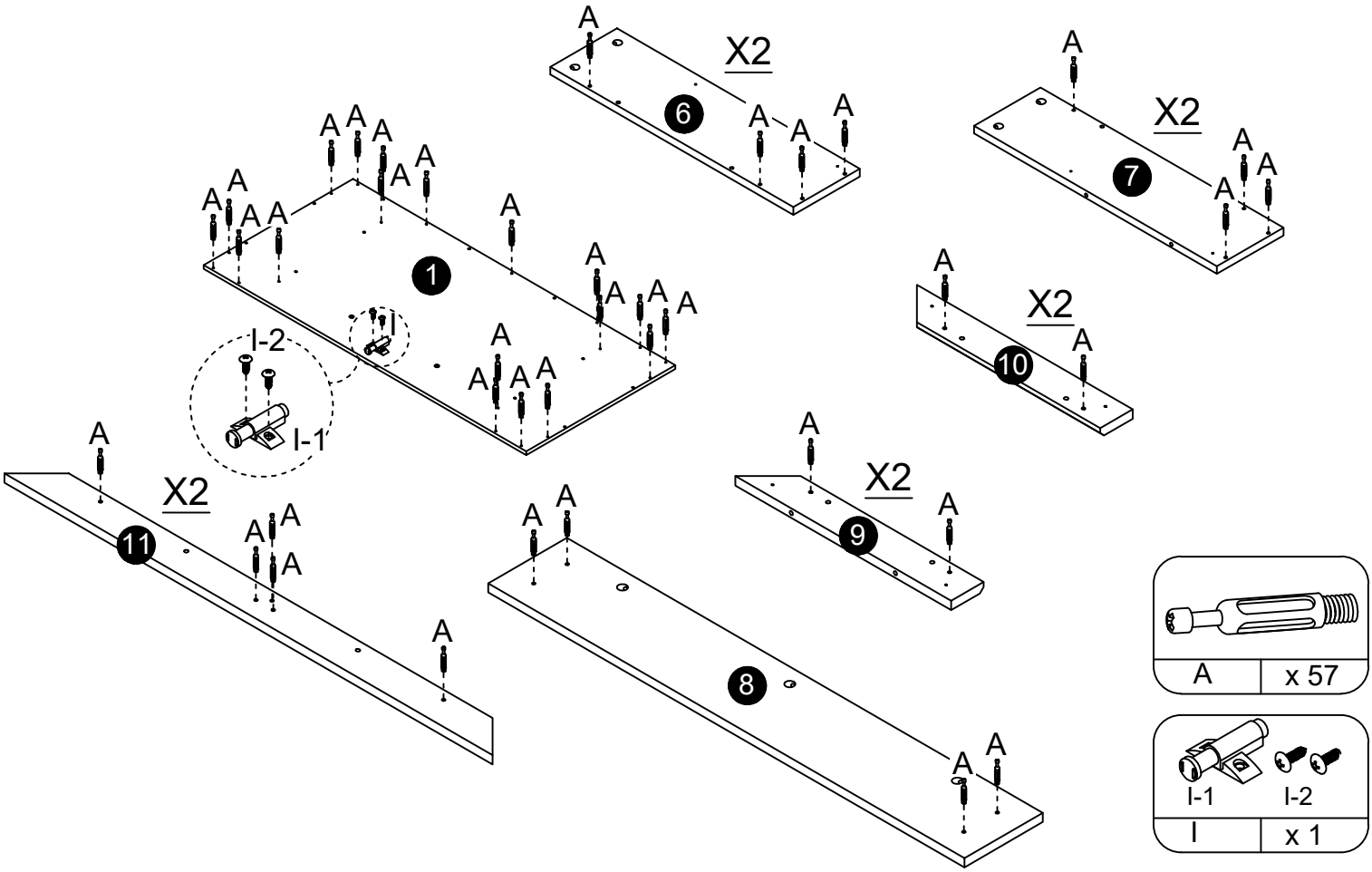

STEP 2

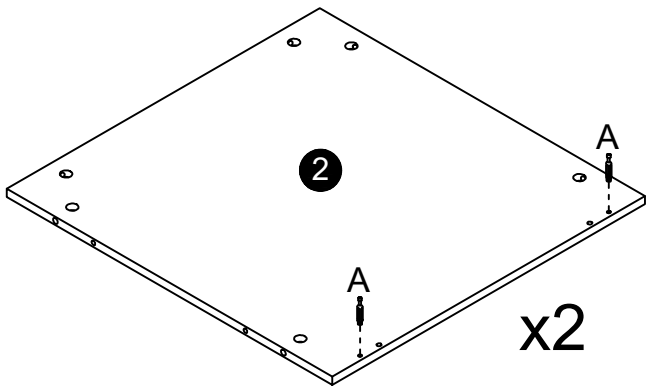

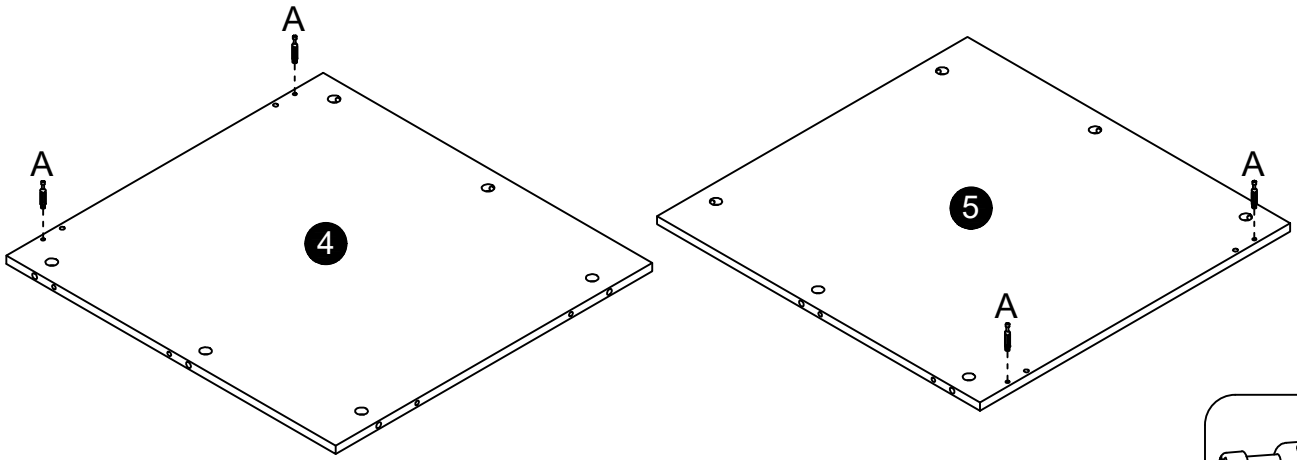

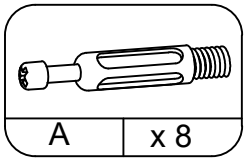

STEP 3

PF078

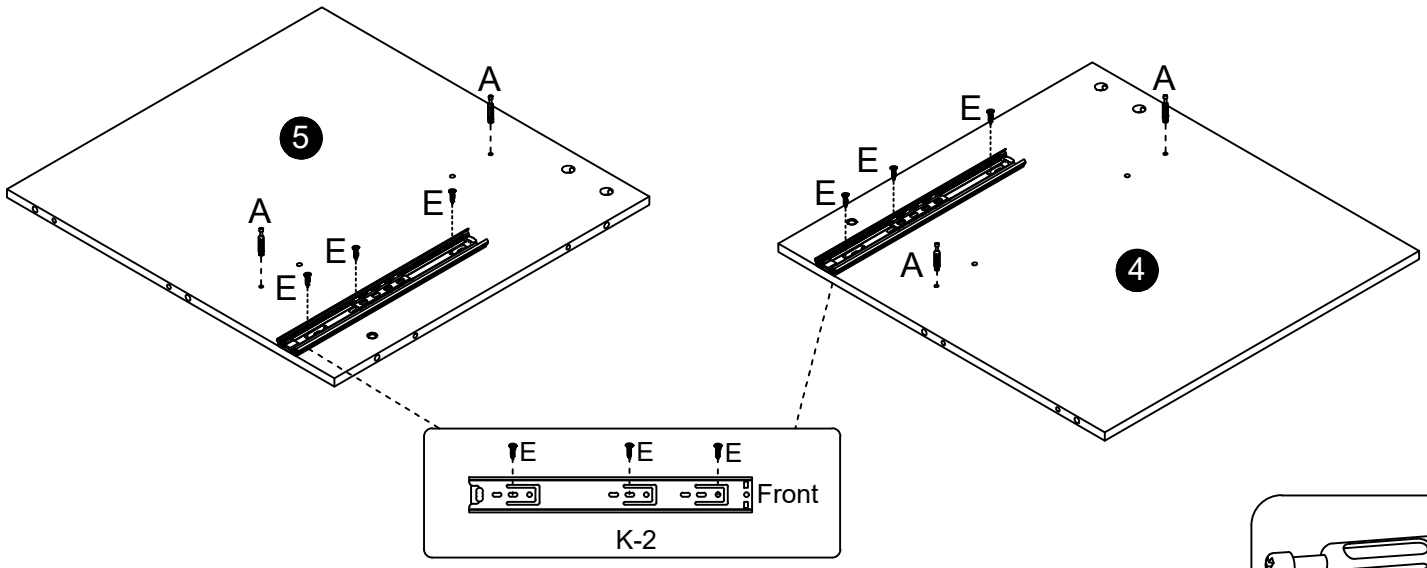

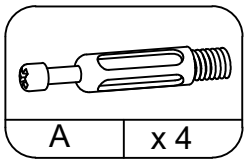

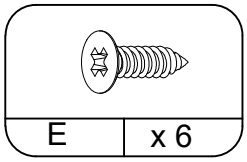

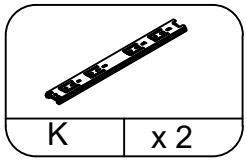

STEP 4

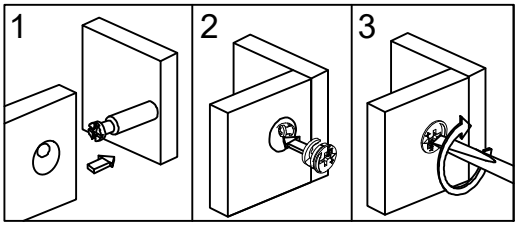

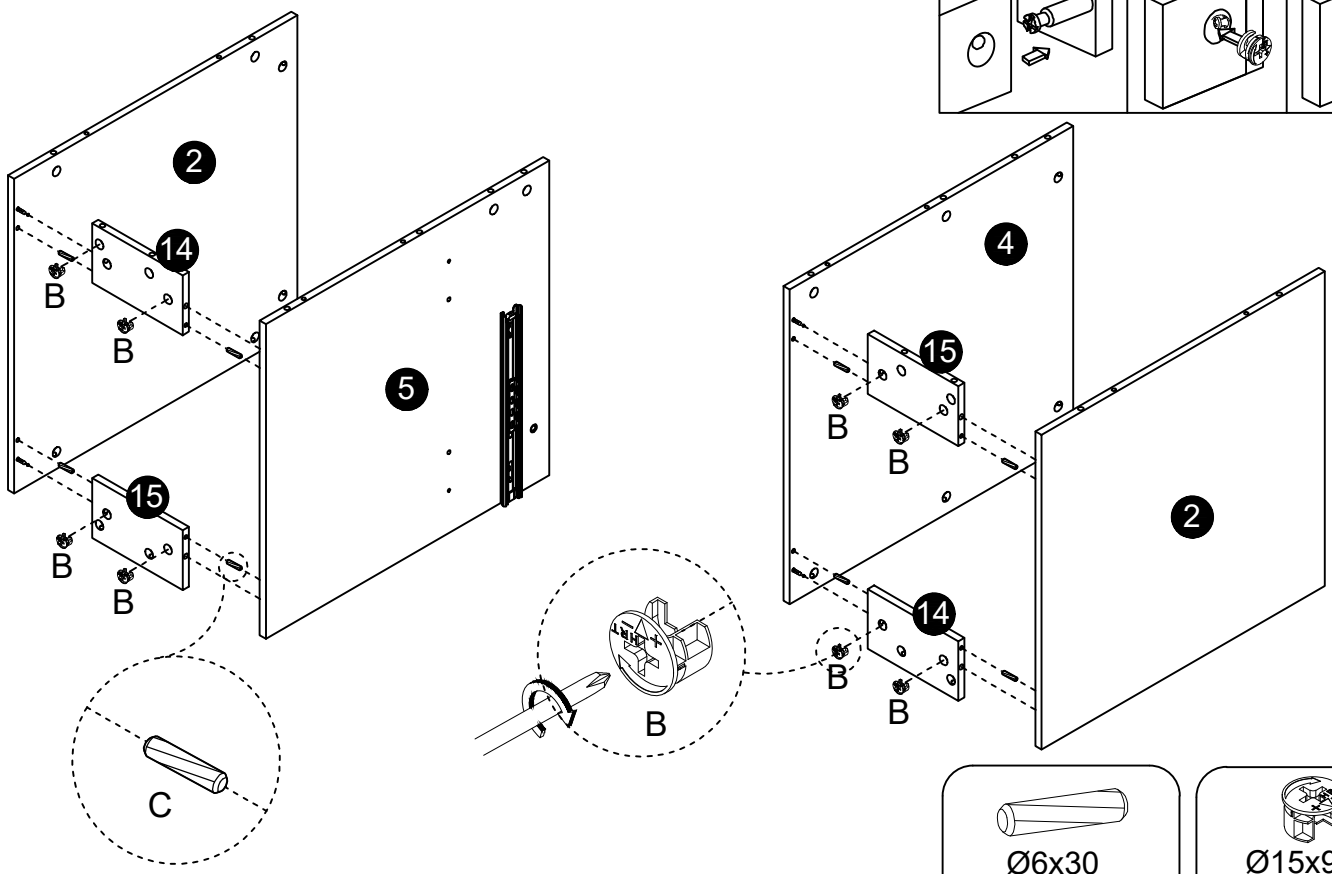

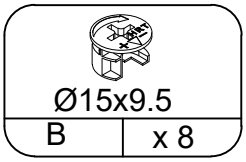

STEP 5

PF078

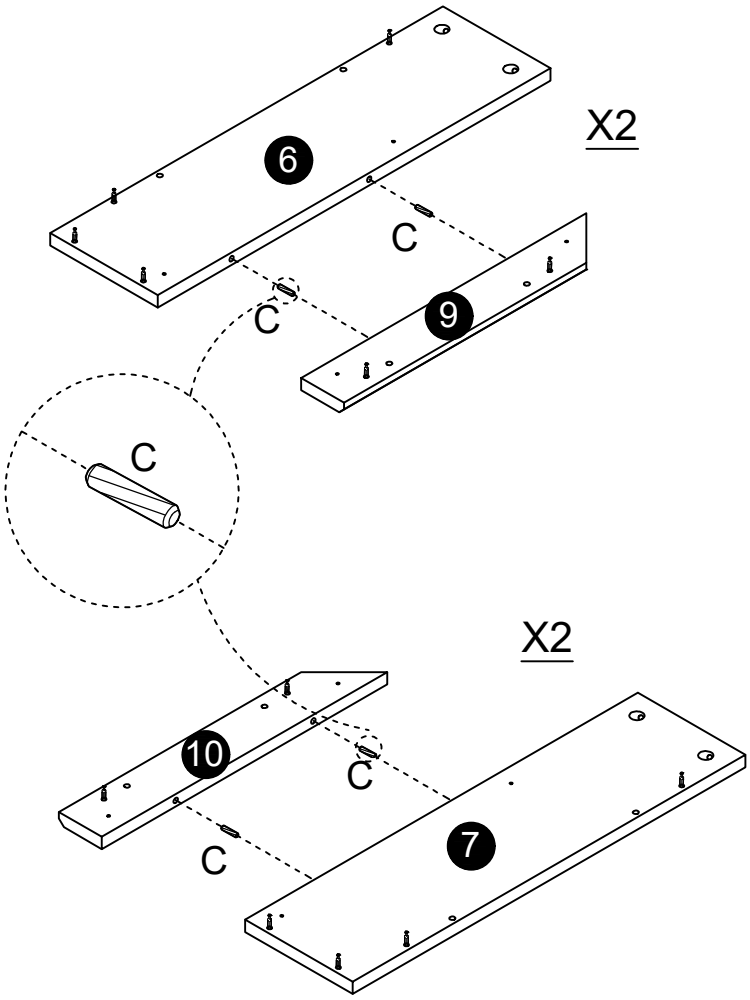

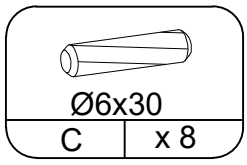

STEP 6

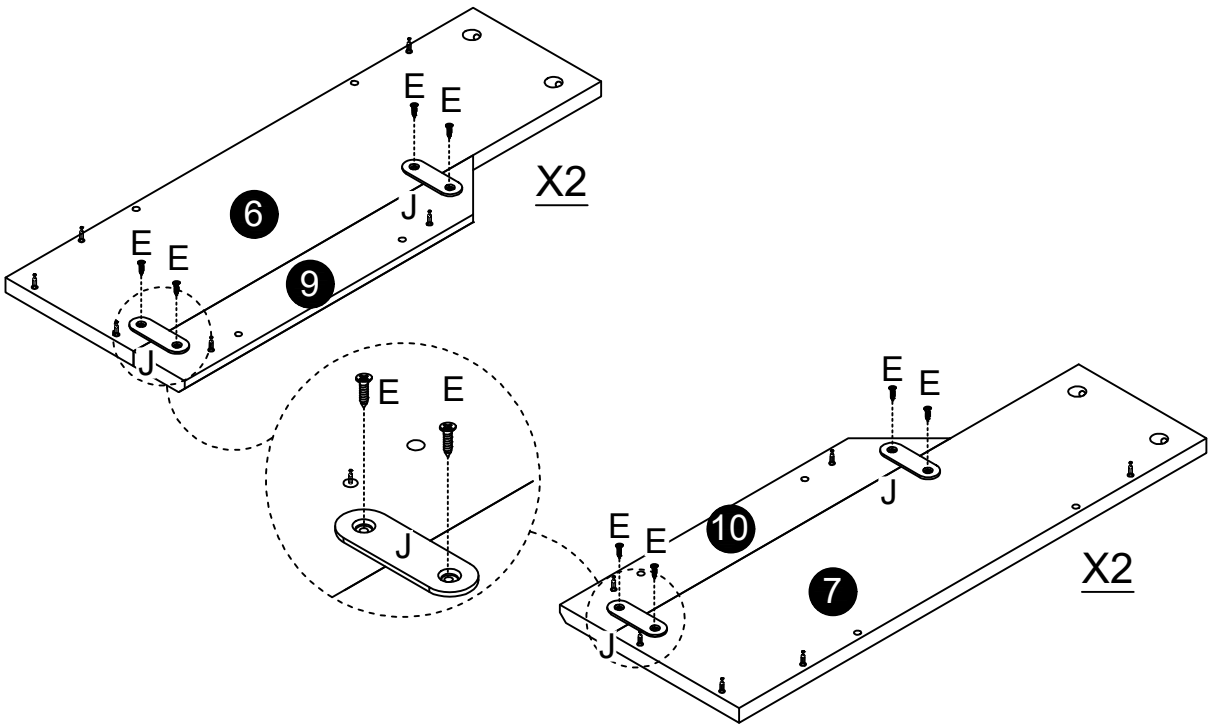

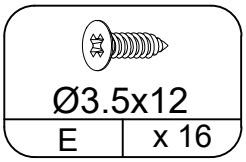

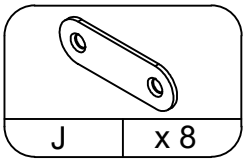

STEP 7

PF078

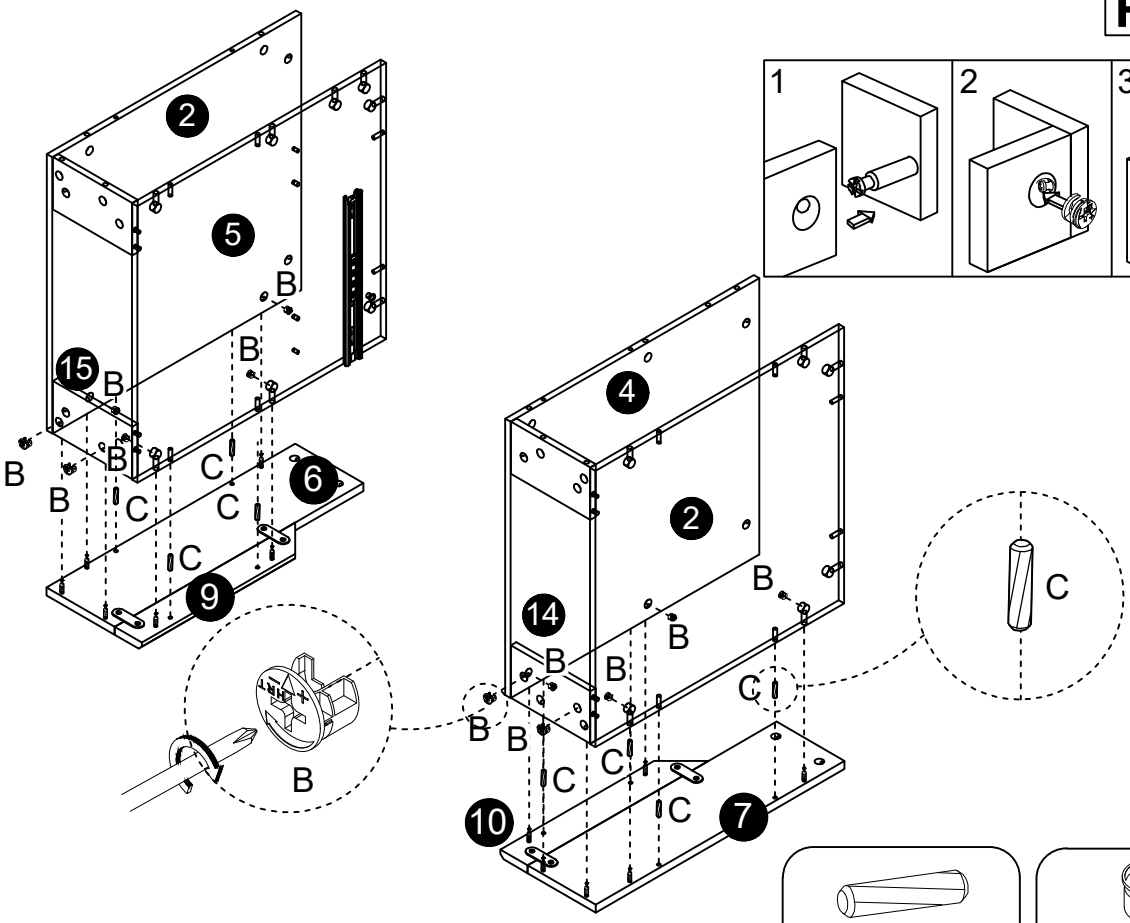

Ø6x30	
C	x 8

Ø15x9.5	
B	x 12

STEP 8

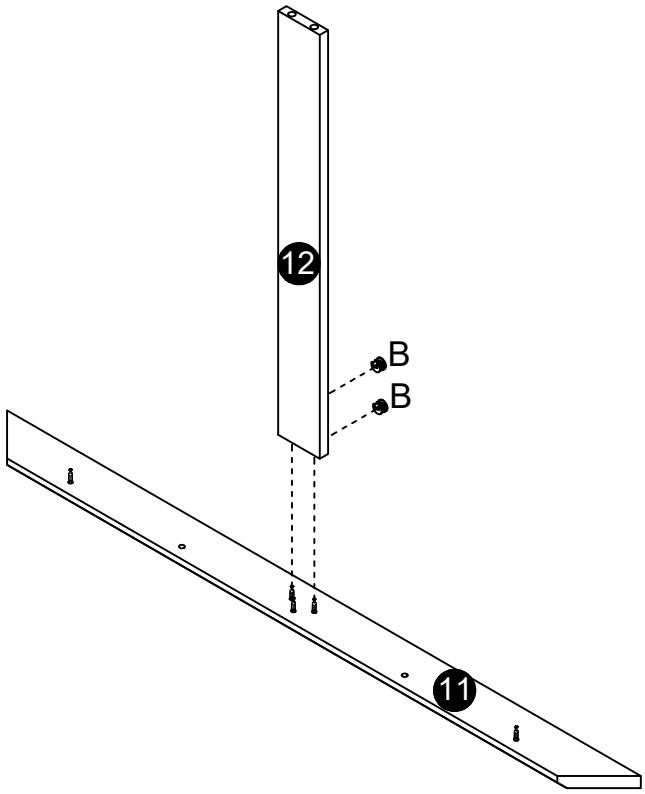

Ø15x9.5	
B	x 2

STEP 9

PF078

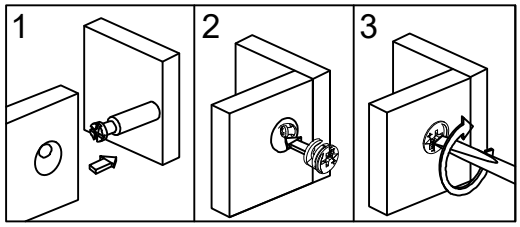

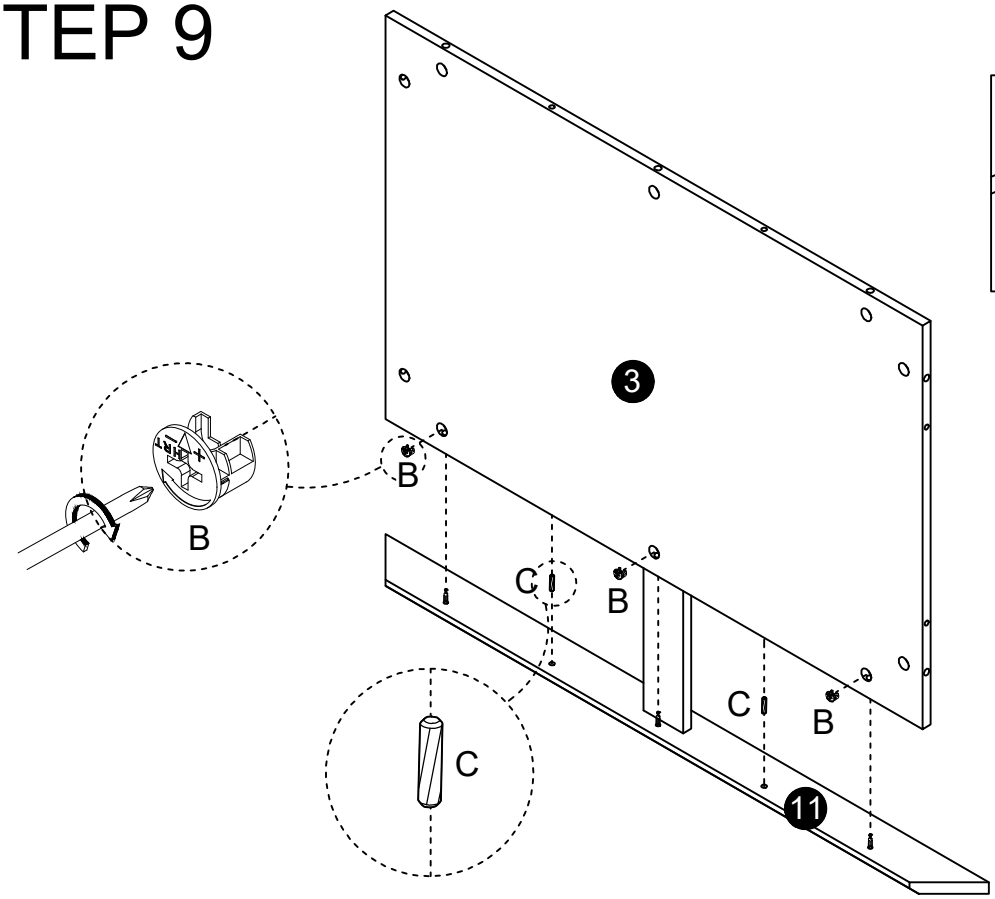

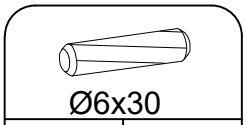

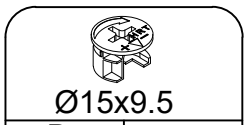

STEP 10

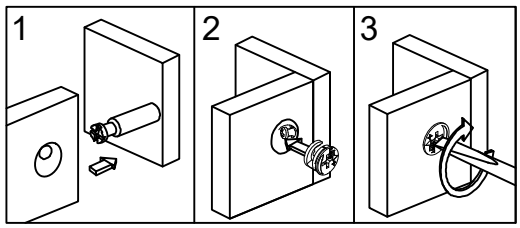

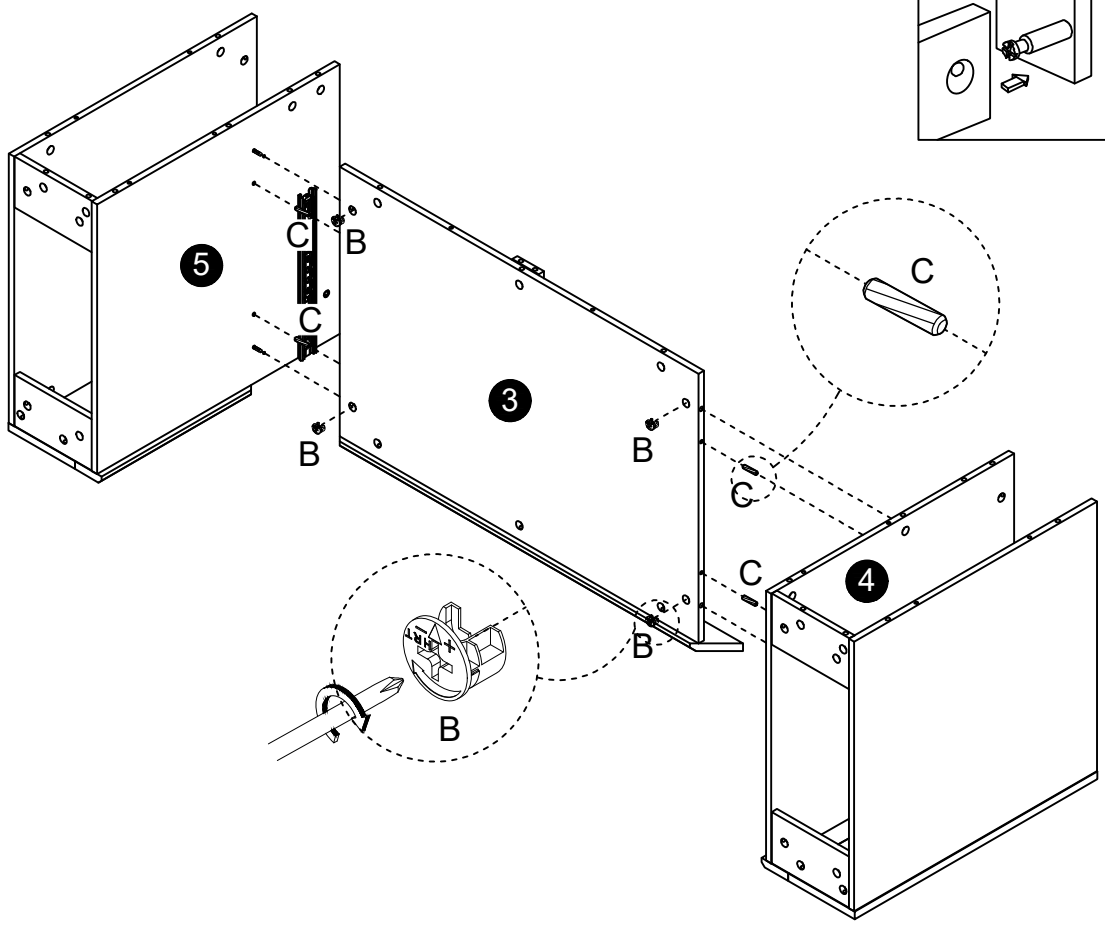

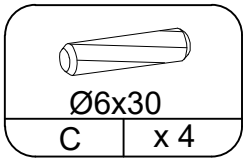

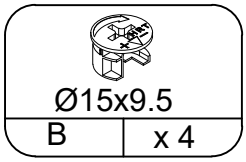

STEP 11

PF078

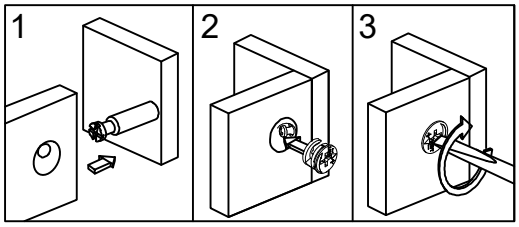

Ø6x30	
C	x 8

Ø15x9.5	
B	x 12

STEP 12

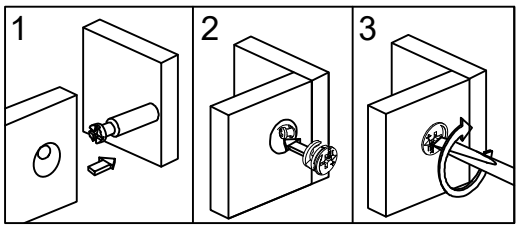

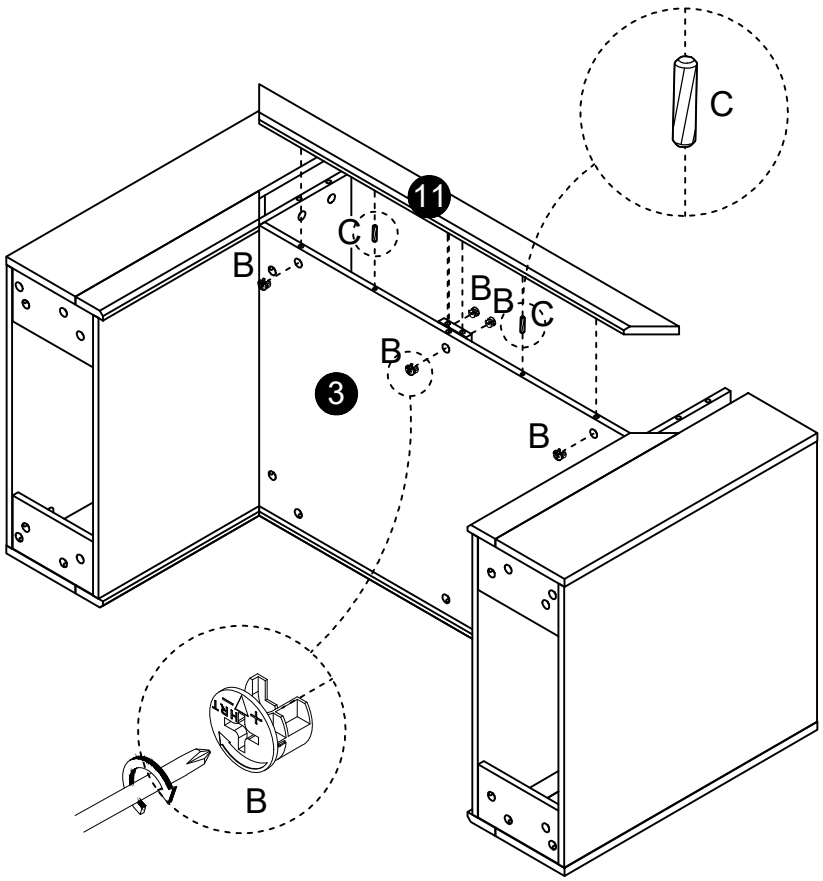

Ø6x30	
C	x 2

Ø15x9.5	
B	x 5

STEP 13

PF078

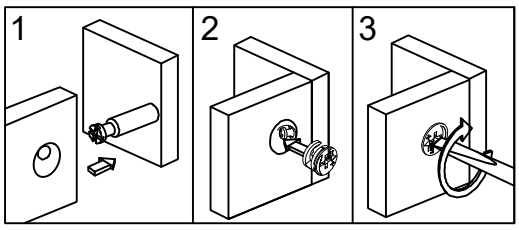

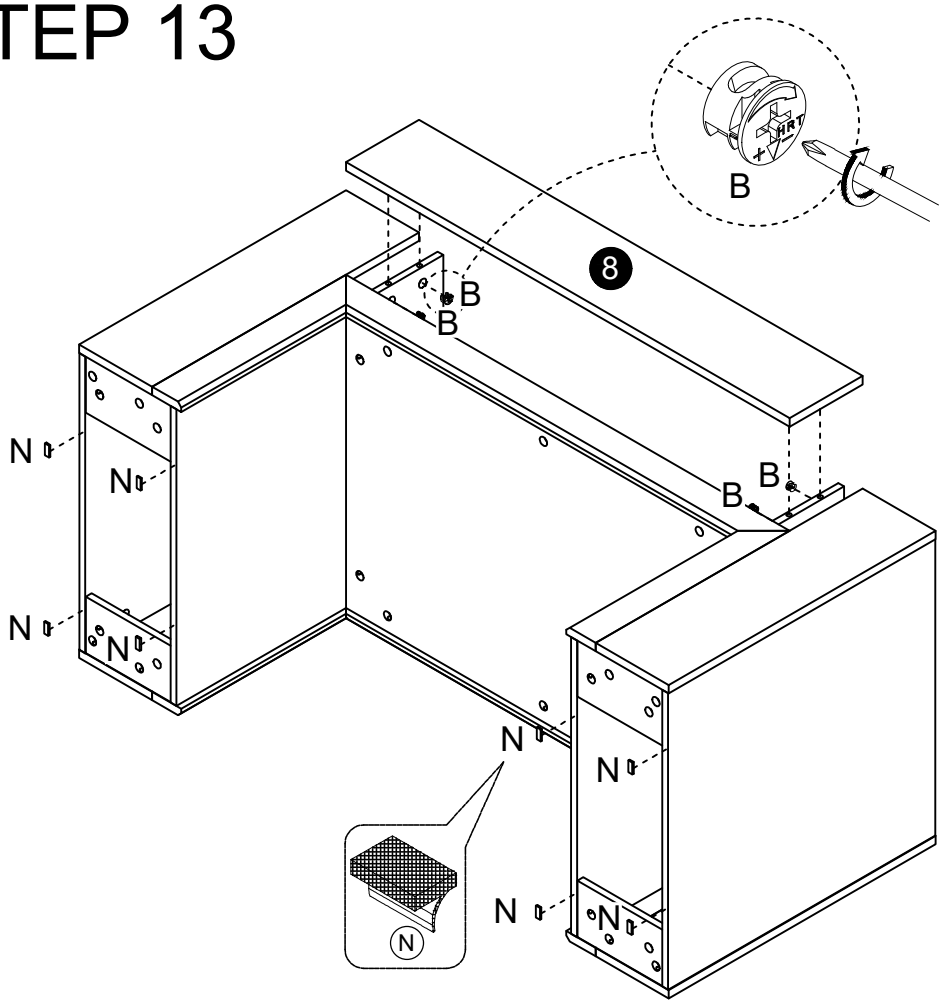

10x40x2mm	
N	x 8+1

Ø15x9.5	
B	x 4

STEP 14

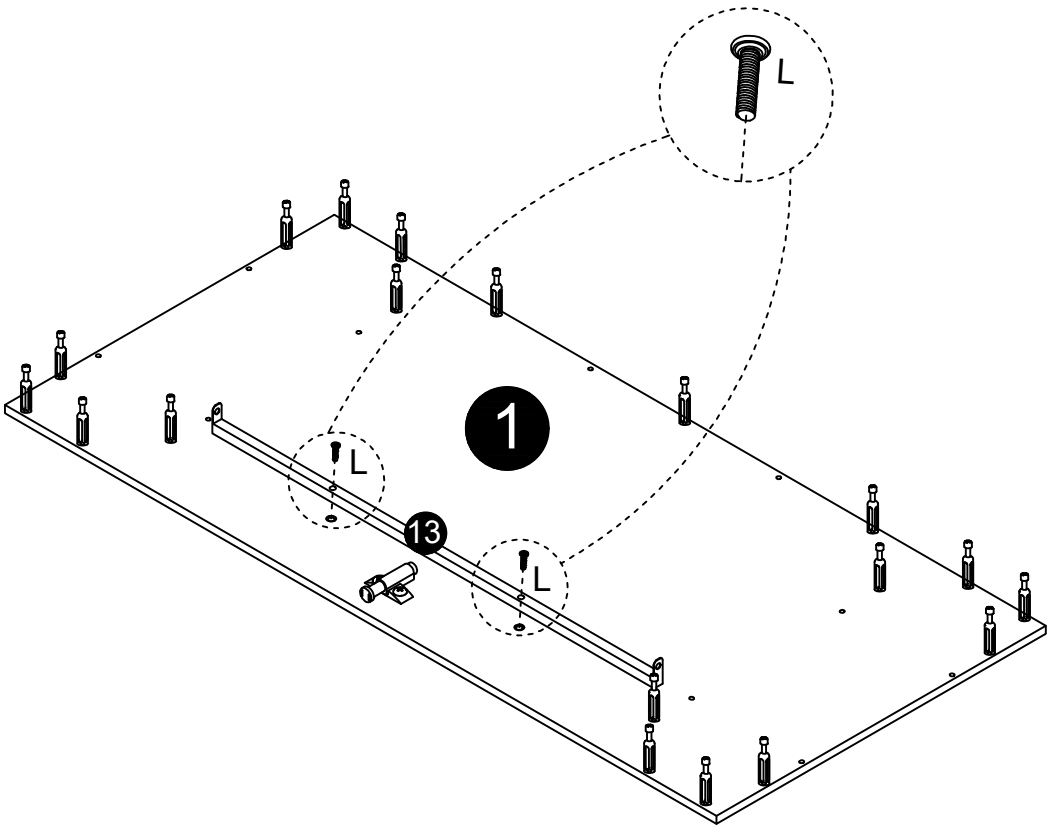

M6x25	
L	x 2

STEP 15

PF078

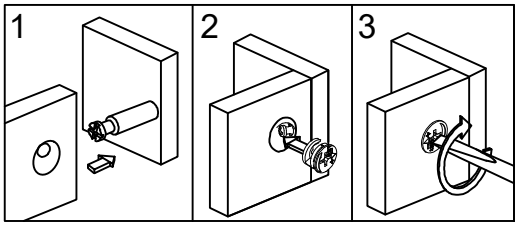

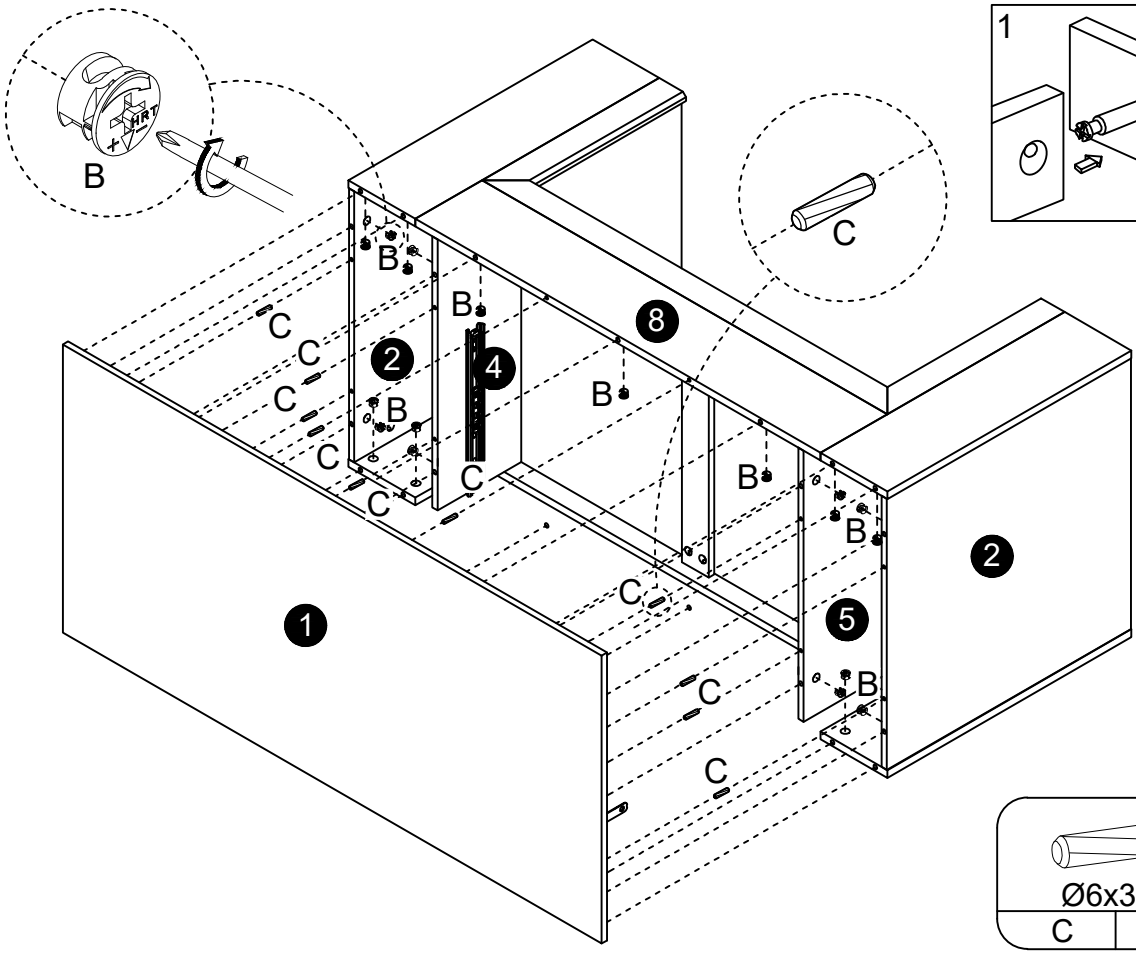

Ø6x30	
C	x 10



Ø15x9.5	
B	x 19

STEP 16

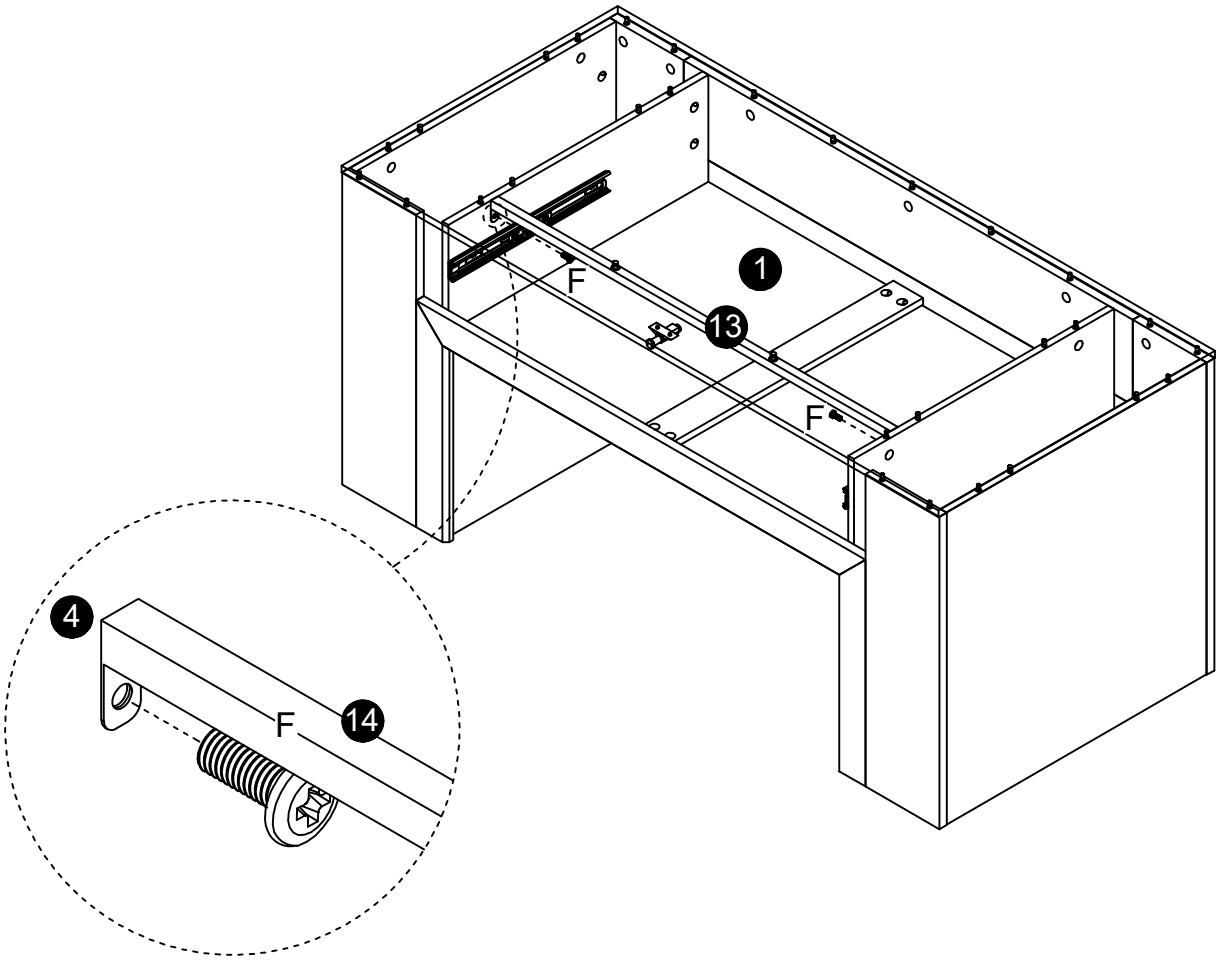



M6x10	
F	x 2

STEP 17

PF078

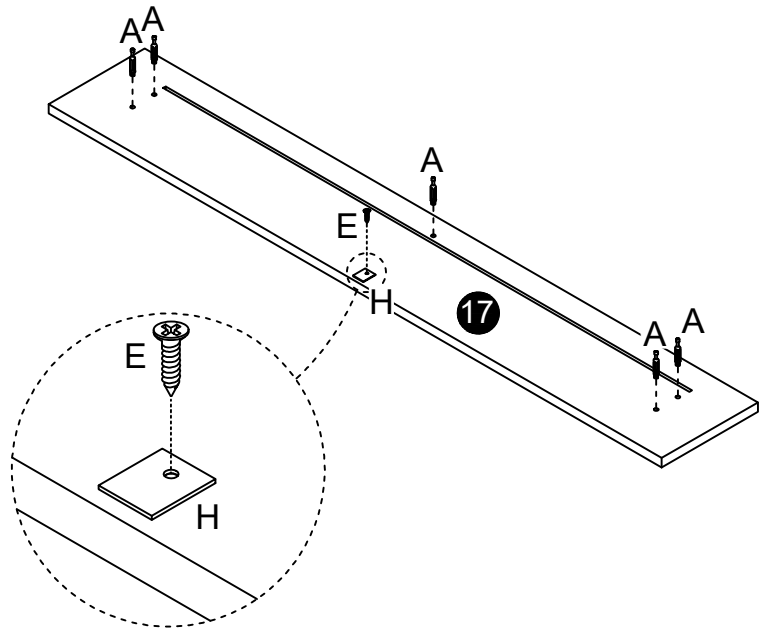

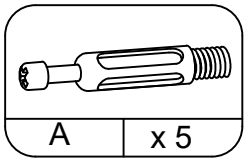

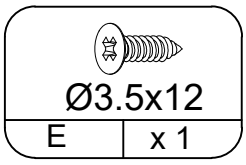

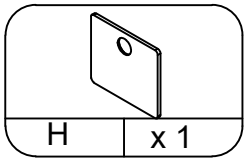

STEP 18

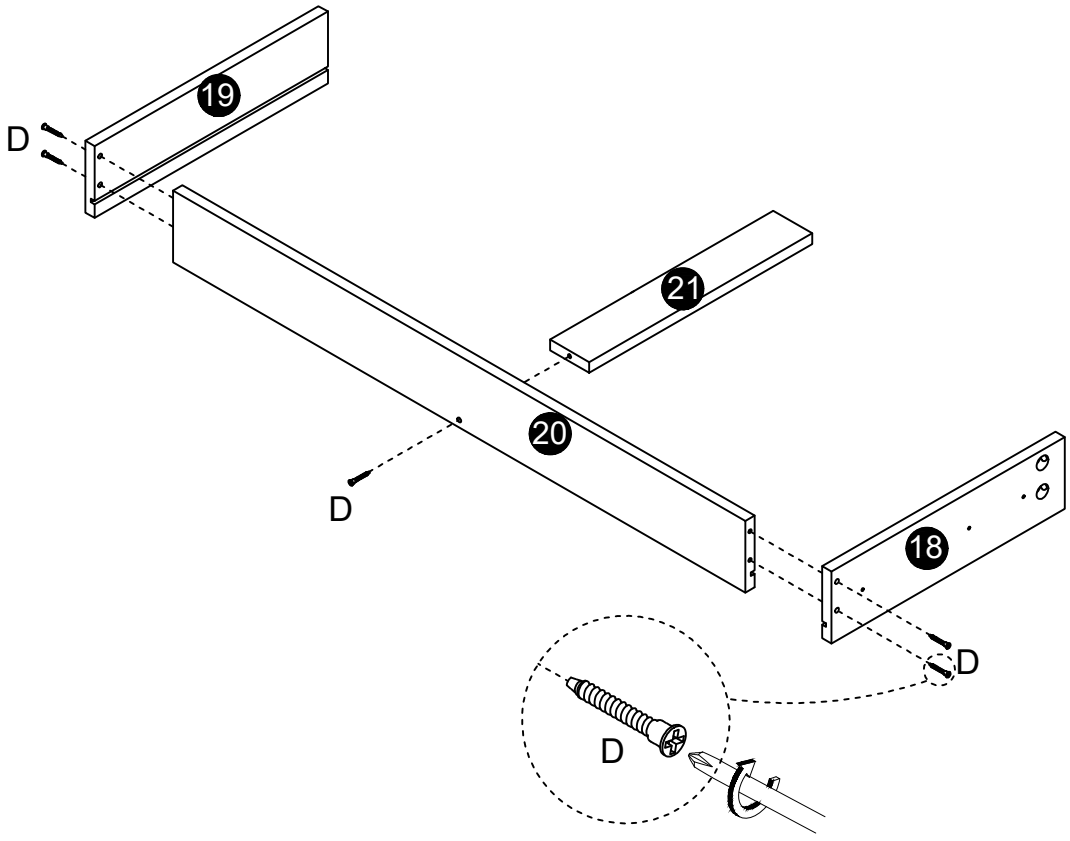

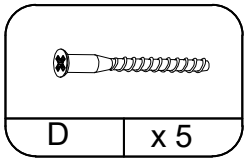

STEP 19

PF078

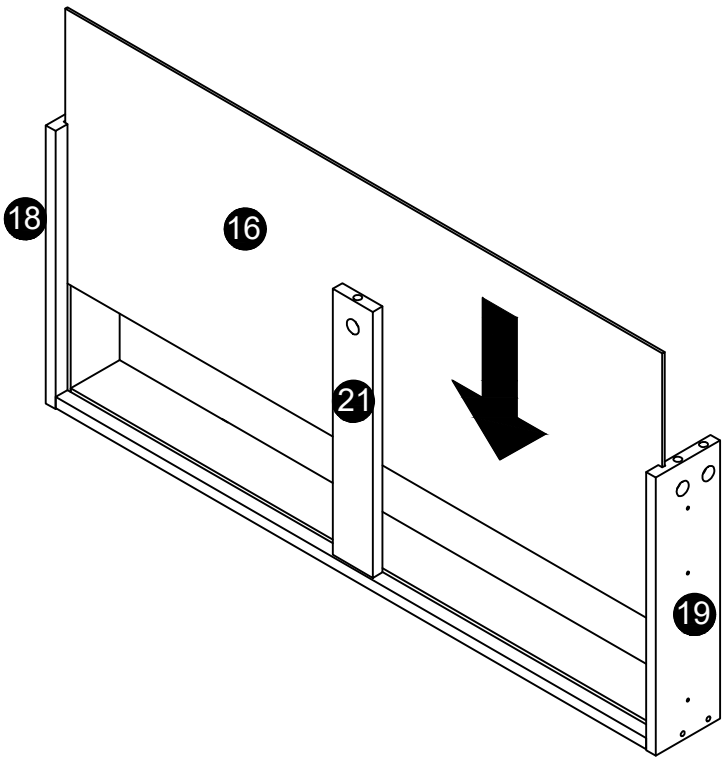

STEP 20

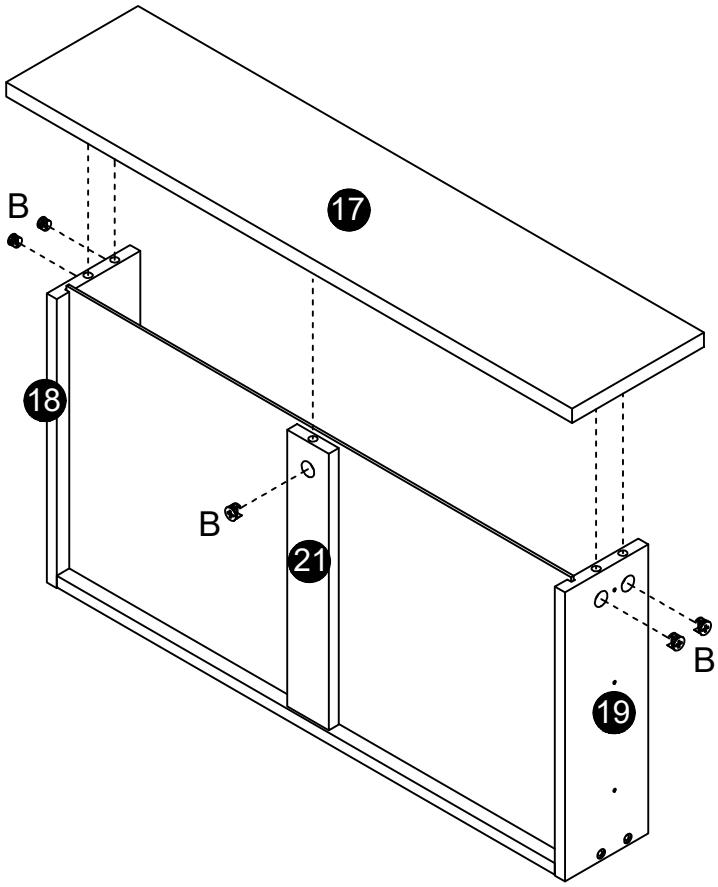

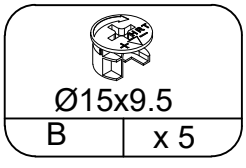

STEP 21

PF078

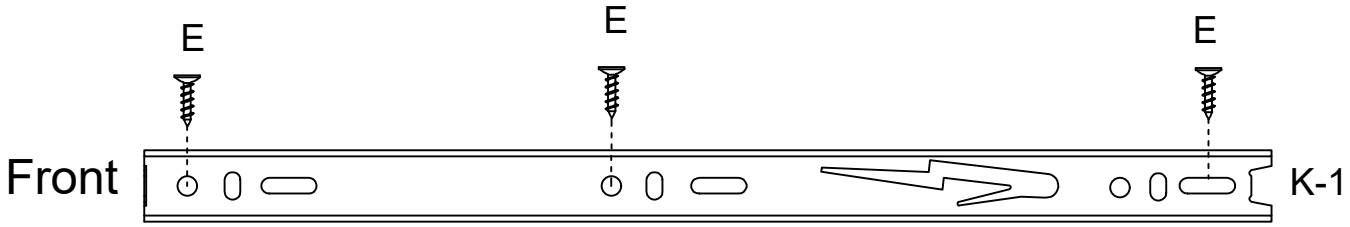

Inner Track Adjustment:
If the drawer height is uneven, you can adjust the slide position up or down to balance it.

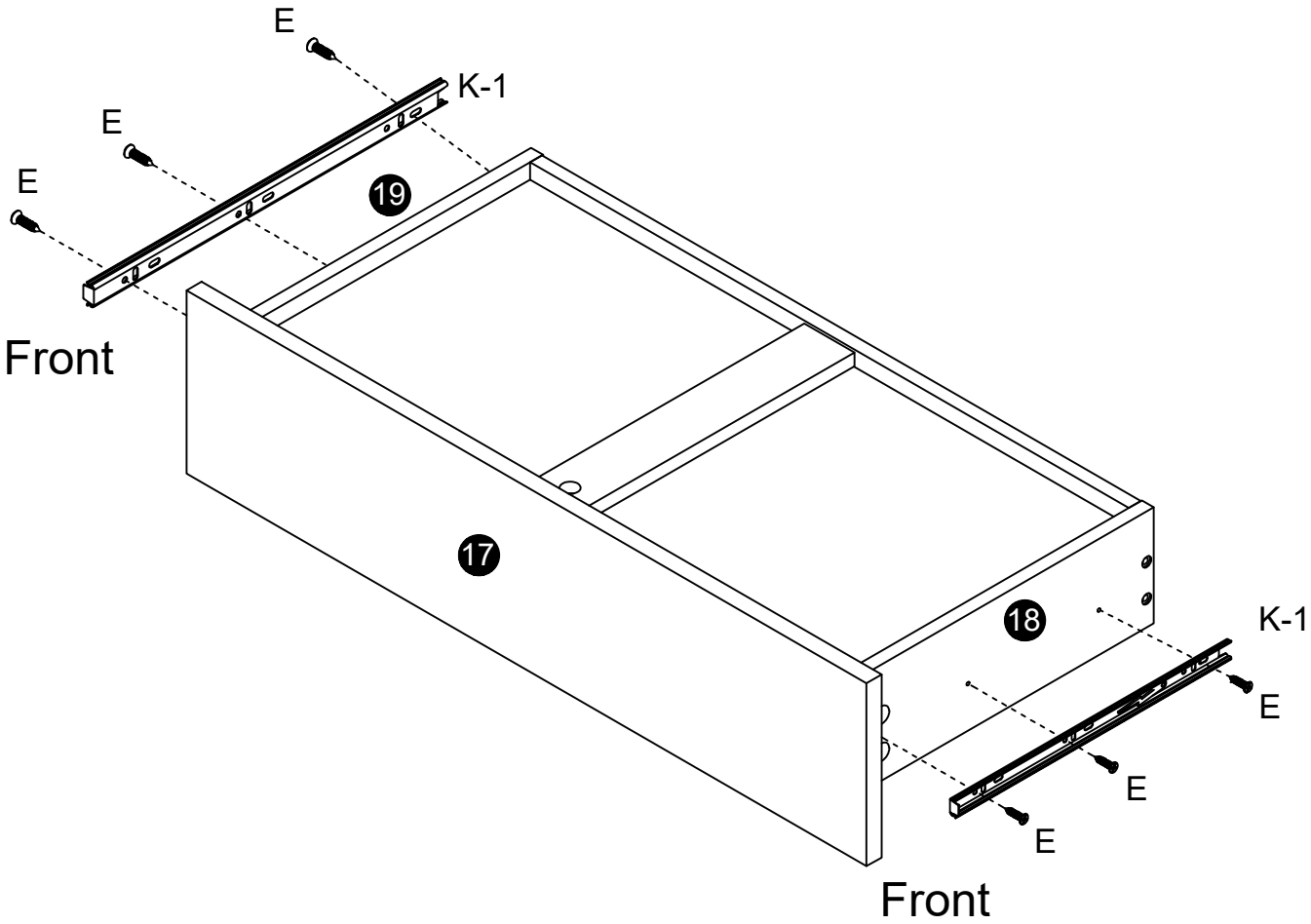

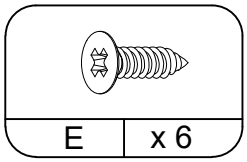

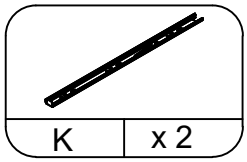

STEP 22

PF078

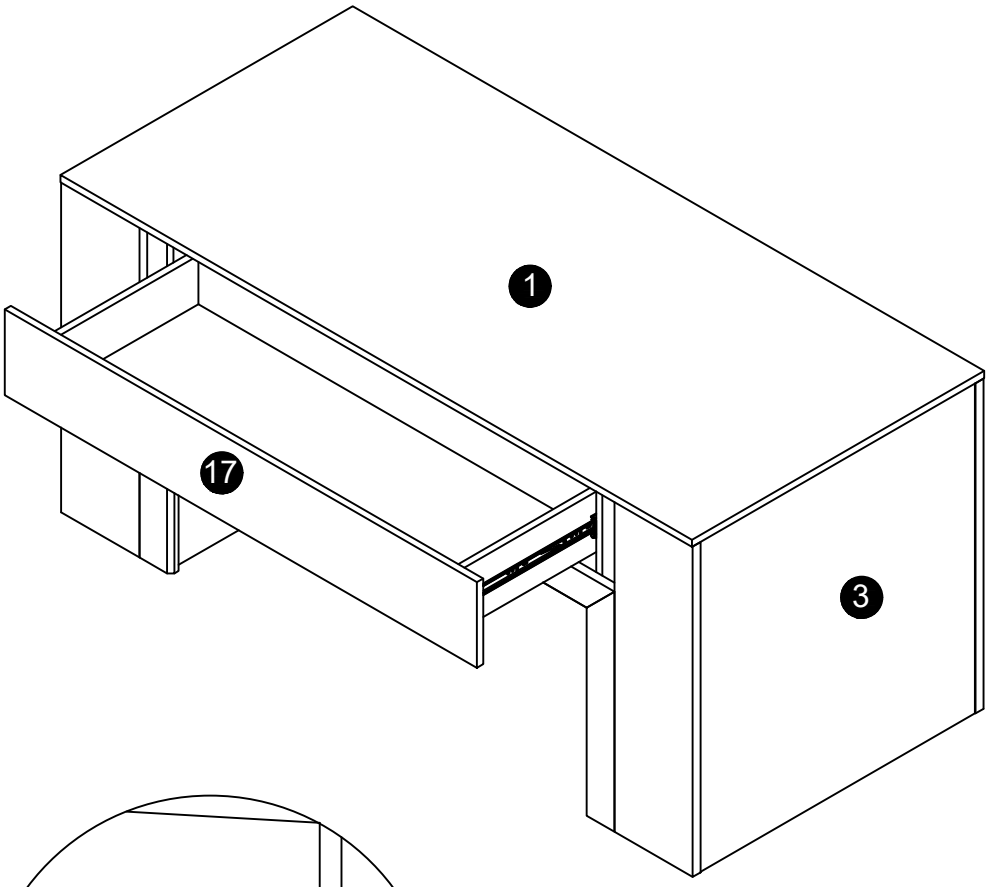

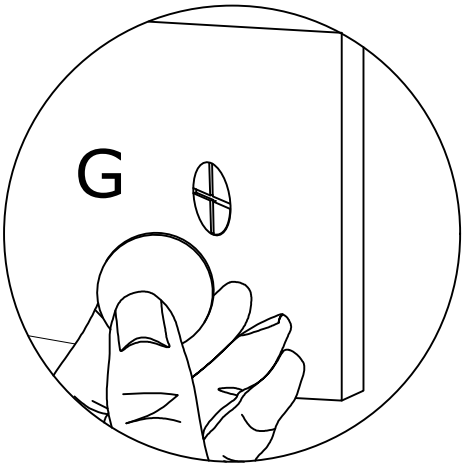

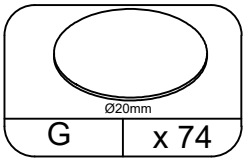

FURNITURE CARE AND MAINTENANCE

Medium - Density Fiberboard and Particle board

Thank you for your purchase. We want your item to last as long as possible. To ensure the product gives you years of service, please refer to this care and maintenance guide.



MAINTENANCE

· Tighten all bolts and screws again within the first 2 weeks of assembly
· Check the tightness of all bolts every 2 months, tighten them if necessary



CLEANING

· Clean the surface of the MDF (medium - density fiberboard) or PB (particle board) with a lightly dampened cloth.
· Small amount of mild soap can be used if necessary
- **Dry the surface immediately after cleaning.**

⚠ DO NOT use bleach or alcohol detergent to clean the surface.
⚠ DO NOT apply wood treatment on parts made with MDF and PB.
Medium - density fiberboard and Particle board will swell and distort when suffer from water damage.
Make sure to dry the furniture immediately after cleaning