VEIKOUS

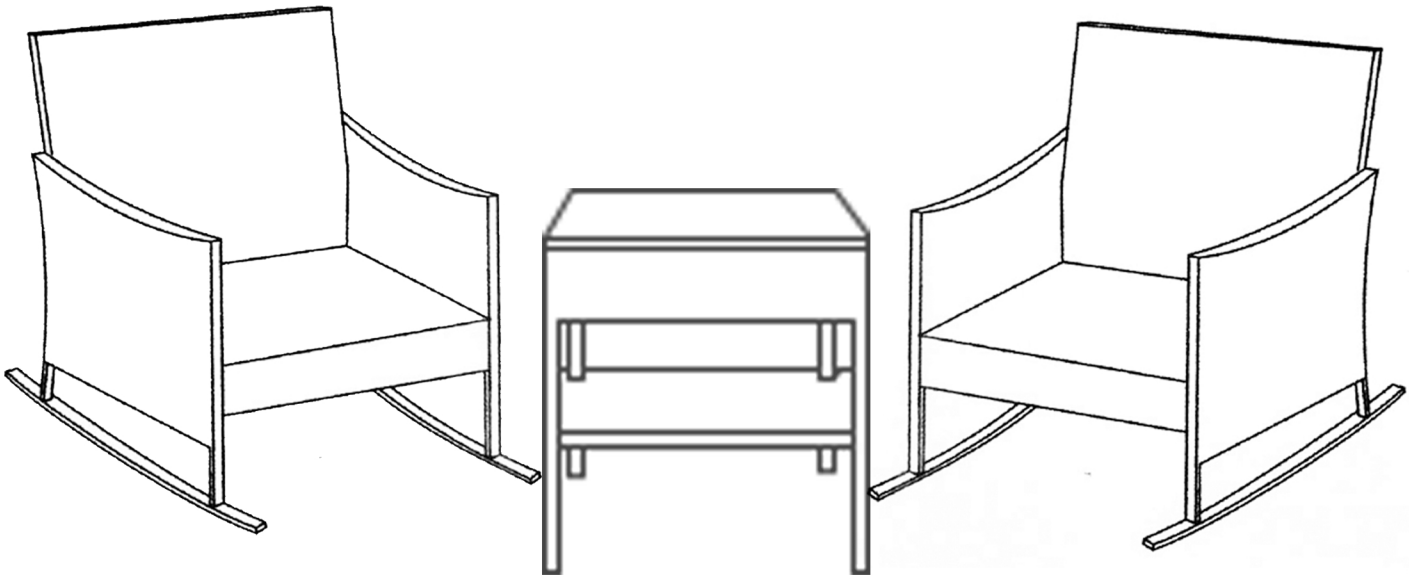

INSTRUCTION MANUAL

www.veikous.com

customerservice@veikous.com

STOP

MISSING A PART?
CALL US BEFORE GOING BACK TO THE STORE

The store where you made your purchase
Does not stock parts for this item.
If you have assembly questions or you are missing or have damaged parts,please call

1-858-324-1911

(Mon - Sun, 10:00 am to 7:00 pm EST)

you can also e-mail customerservice@veikous.com

or visit www.veikous.com

Please prefer email contact. Due to busy lines, there may be a wait for calls to be answered.

Please have the following information ready when you contact us, so we can assist you promptly.

- Order number or PO number (you can find the info on your invoice, receipt or platform account).
- The model number of the product (printed on the package box).
- Description of the part from the parts list.

- Read entire assembly manual,paying special attention to the important tips and safety information .
- Ensure there are no missing pieces by first separating and identifying all parts.
- Make sure to check packing material for small parts that may have fallen out during shipment.
- Structures are not intended for public use.The Company does not warranty any of its residential structures subjected to commercial use such as:Daycare,Preschool,Nursery School,Recreational Park,or any similar Commercial Application.
- This manual contains helpful information concerning assembly preparation,installation procedure and required maintenance.
- Always keep safety in mind as your structure is being built.
- Keep these instructions for future reference.

1. Two or more people are required for assembly.

2. Wearing protective gloves is recommended.

3. Use the hex keys in the box.

4. Do not fully tighten screws prior to complete assembly.

5. For ease of construction, you may need to use a drill.

HARDWARE

M6*15	M6*30	M6*35		
E 4PCS	F 4PCS	G 20PCS	H 1PC	I 28PCS

PARTS

A 2PC	B 2PC	C 2PC	D 2PC
J 1PC	K 2PC	L 1PC	M 1PC

WARNING

1. It is recommended to tighten the screws halfway during installation, and then align all the screws with the holes, and then tighten the screws.
2. If you encounter misalignment of the holes, please try step 1.

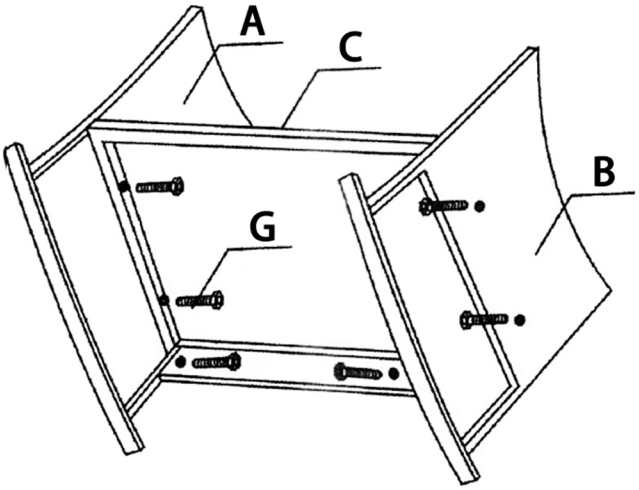

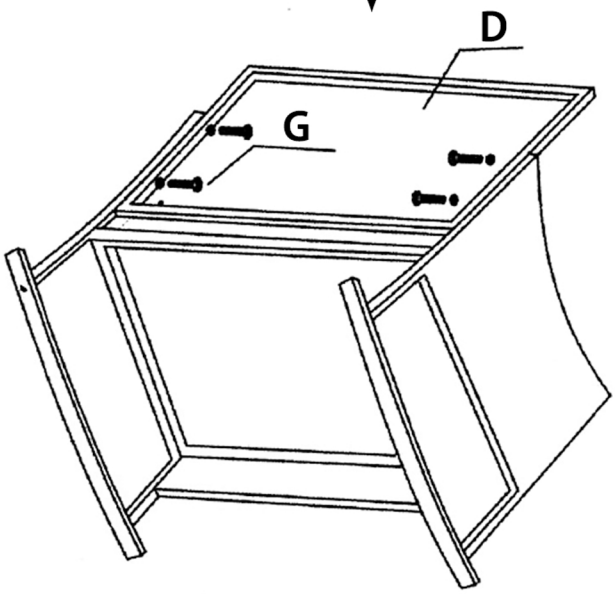

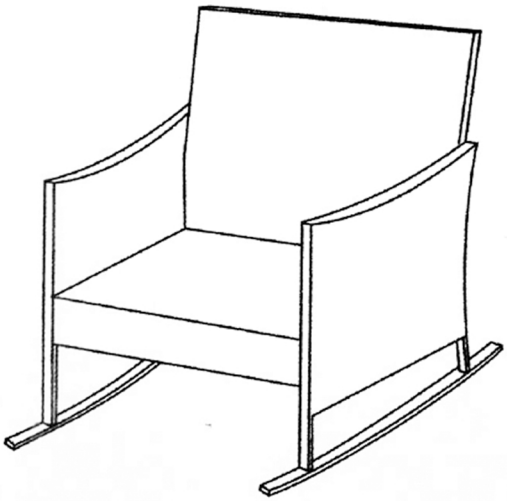
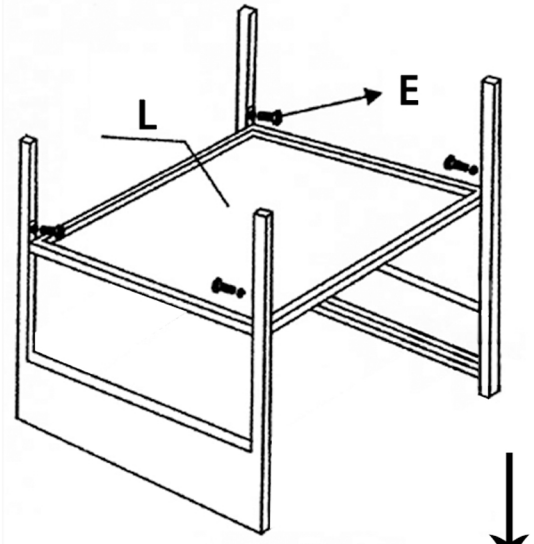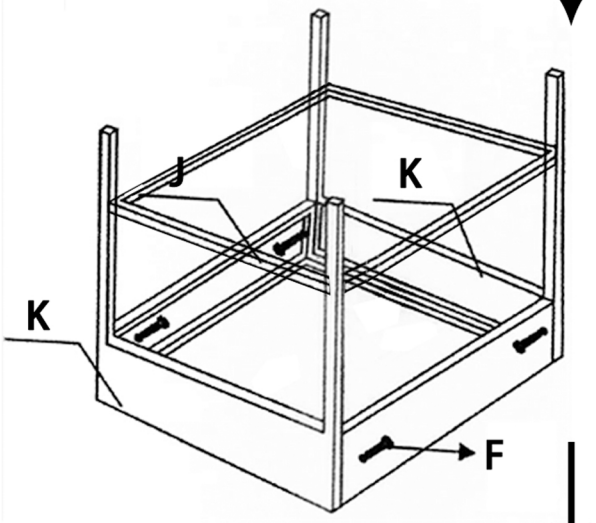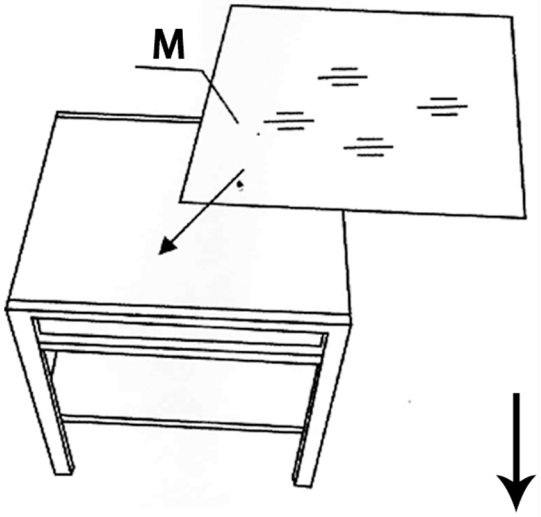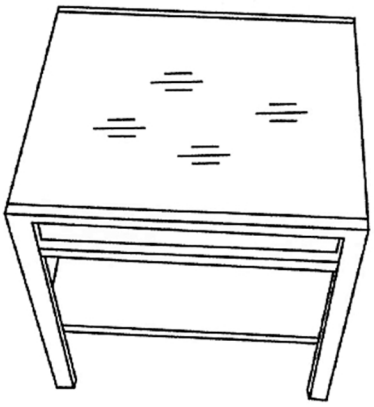
(Repeat this step*2)