TEAR SHEET



Orsini 30" Chandelier

Item # ARN 5240BZ-PW

Designer: AERIN

O/A Height: 46.75"
Fixture Height: 6.75"
Min. Custom Height: 11"
Width: 29.75"
Canopy: 5" Round
Finishes: BZ, HAB, PN
Shade Treatments: PW
Socket: 4 - E12 Candelabra
Wattage: 4 - 6.5 LED B11
Weight: 19 Pounds
Note: 120V Configuration Only | Custom Height Available

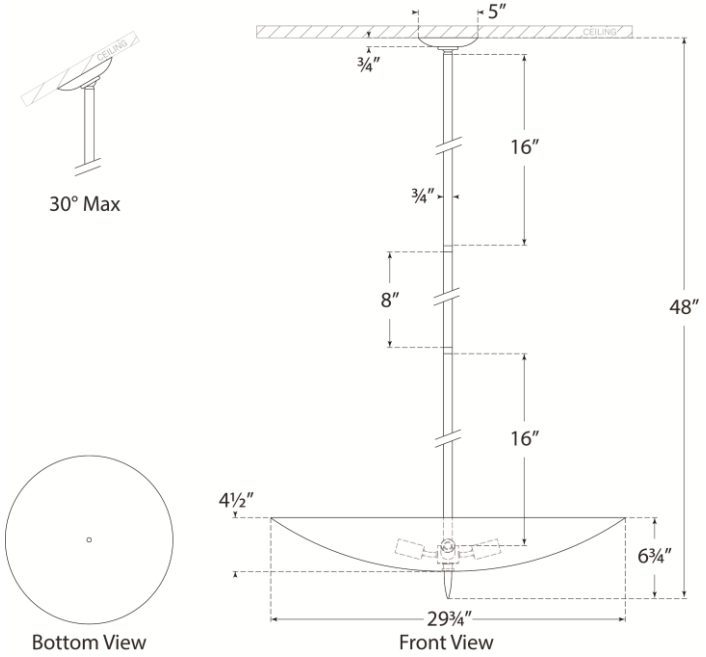

VISUAL COMFORT & CO.

DAMP LED 4