USER MANUAL

Ceiling fan

1_Important Safeguards

❶.To reduce the risk or electrical shock the electricity has been turned off at the circuit breaker or fuse box before begin.

❷.All wiring must be in accordance with the National Electrical Code NASI/NFPA 70-1999 and local electrical codes.Electrical installion should be performed by a qualified licensed electrician.

❸.The outlet box and support structure must be securely mounted and capable of reliably supporting 35ib.(15.9kg).Use only UL listed outlet boxes marked "Acceptable for Fan Support of 35ibs(15.9kg)or less."

❹.The fan must be mounted with a minimum of7ft.(2m) dearance from the trailing edge of the blades to the floor.

❺.Do not operate the reversing switch while the fan blades are in motion.You must turn the fan off and stop the blades before you reverse the blade direction.

❻.Do not place objects in the path of the blades.

❼.To avoid personal injury or damage to the fan and other items use caution when working around or cleaning the fan.

❽.Electrical diagrams are for reference only.Light kits that are not packed with the fan must be UL-li'sted and marked suitable for use with the model fan you are installing.Switches must be UL General Use Switches.Refer to the instructions packaged with the light kits and switches for proper assembly.

❾.After making electrical connections,spliced conductors should be turned upward and pushed carefully up into the outlet box.The wires should be spread apart with the grounded conductor and the equipment-grounding conductor on one side of the outlet box.

❿ .All setscrews must be checked and retightened where necessary before installation.

Remove the rubber motor stops on the bottom of the fan before i nstalling the blades or testing the motor.

To reduce the risk or fire or electric shock,do not use this fan with any solid-state speed control device.

To avoid possible electrical shock,turn the electricity off at the main fuse box before wiring.It you feel you do not have enough electrical wiring knowledge or experience,contact a licensed electrician.

Electrical diagrams are for reference only.Optional use of any light kitshall be Ul-listed and marked suitable for use with this fan.

To reduce the risk of fire,electric shock,or personal injury.mount to outlet box marked' Acceptable for fan support of 35 ibs.(15.9 kg) or less."and use the screws provided with the outlet box.

2_Installation Instructions

2.1_Pre-installation

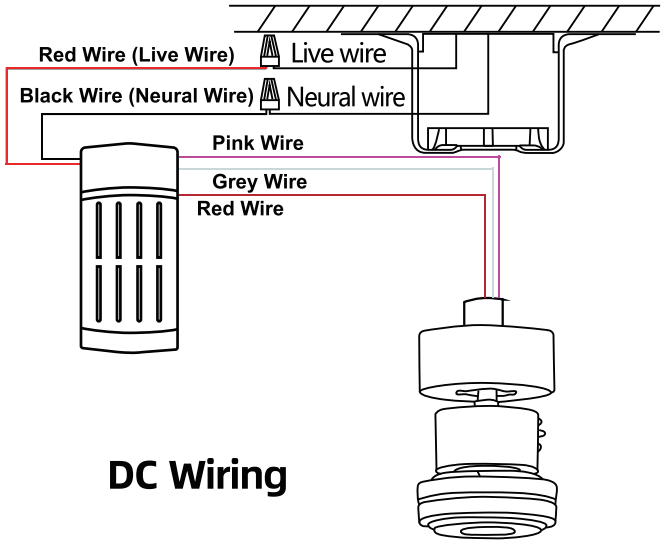

DC Wiring

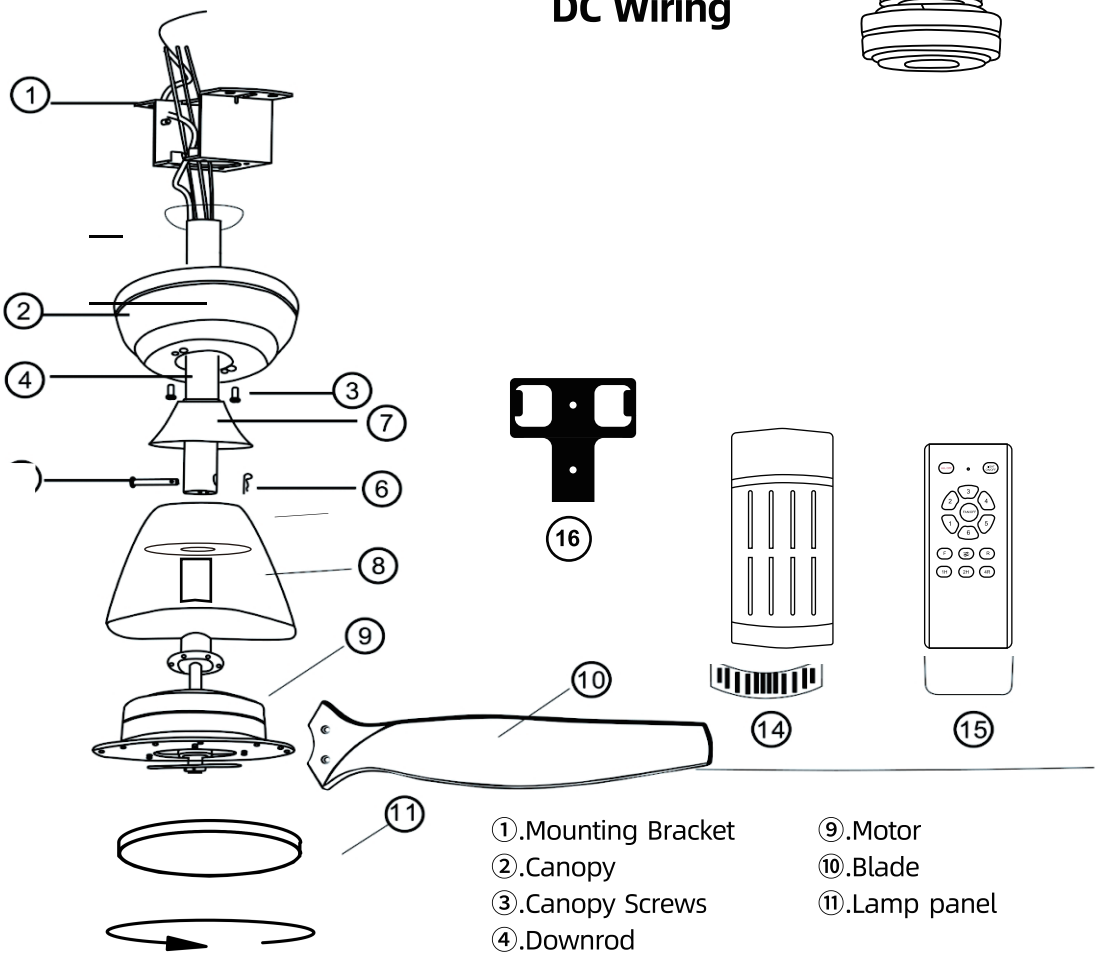

①.Mounting Bracket
②.Canopy
③.Canopy Screws
④.Downrod
⑤.Cross pin
⑥.Cottre pin
⑦.Yoke cover
⑧.Motor house
⑨.Motor
⑩.Blade
⑪.Lamp panel
⑭.Receiver
⑮.Remote control
⑯.Remote support

2.2_Tools Needed

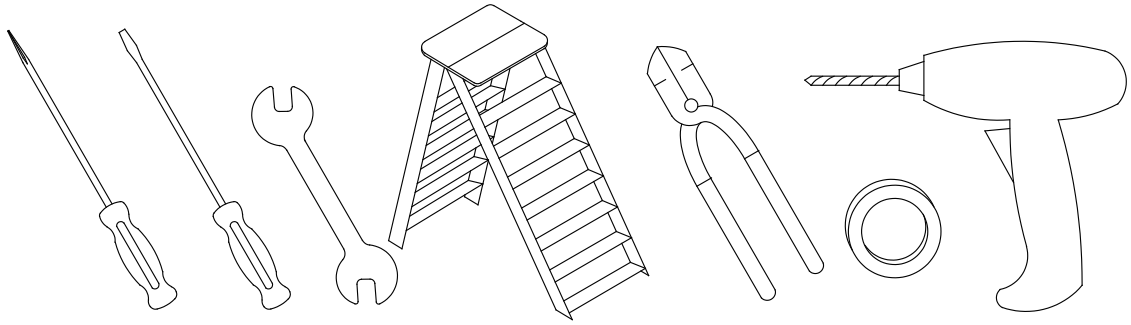

You may need the tools below:

Screwdrivers	Wrench	Ladder
Wire Strippers	Insulation Tape	Power drill

2.3_Parts Inventory

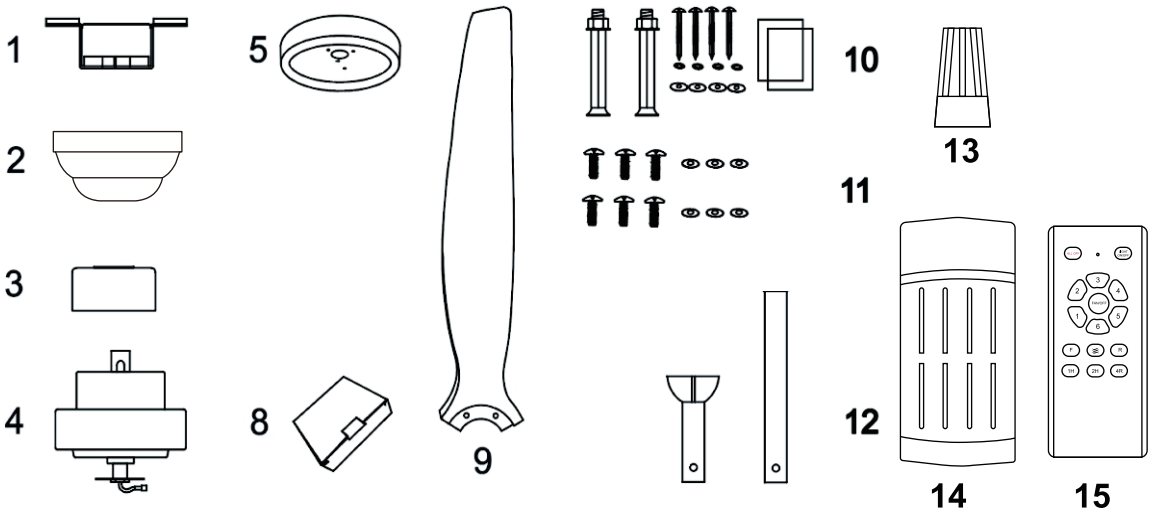

1.Mounting Bracket ····· ×1
2.Top Canopy ····· ×1
3.Downrod Canopy ····· ×1
4.Motor Body ····· ×1
5.Light Mounting Box ····· ×1
6. Not Applicable
7. Not Applicable
8.Remote Control Kit ····· ×1
9.Wood Blades ····· ×5
10.Mounting Screws Kit ····· ×1
11.Blades Screws ····· × 10
12.Downrods(5"/10") ····· ×1
13.Plastic wire nut (not to scale) ···· × 2
14.Receiver ····· × 1
15.Remote control ····· ×1

2.4_Installation of the hanging brackert(suspension part)

2.4.1_Woodenceling

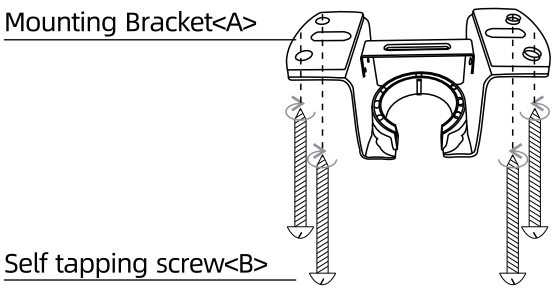

For wooden ceiling,use wood screw to drill on the wooden beam or the "junction box" to fix the hanging bracket (selection is made according to actual requirements of the customers).

2.4.2_STEP 1A-WOODEN CEILING

SWITCH OFF THE ELECTRICAL MAINS AT THE CIRCUIT BREAKER FUSE BOX.

❶.Use the Mounting Bracket (A) as a guide,mark the spots where the 4 Self Tapping Screws (B) will be drilled.

❷.Remove the Mounting Bracket (A),drill 4 holes for 3MM diameter,install the mounting bracket onto wooden ceiling with the 4 Self Tapping Screws (B).

IMPORTANT :

SCREWS MUST BE TIGHTENED TILL SNUG

2.4.3_CONCRETE CEILING

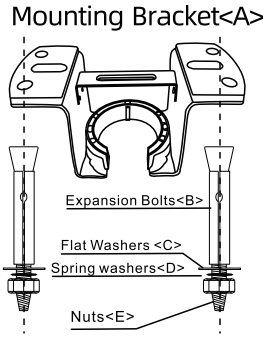

Note: According to the ceiling of different materials, use different screws to fix the hanging bracket.Don't fix the hanging bracket on the wood ceiling less than 12MM to prevent danger caused by loosening of screws.After the hanging bracket is completed, ensure thatit can withstand the tension test of morethan 68KG for safety.

For concrete ceiling,use the percussion bit with diameter 8mm to drill holes according to the length of expansion screws. Then use the attached expansion screws to fix the hanging bracket onto the ceiling (selection is made according to actual requirements of the customers).

2.4.4_STEP 2A-CONCRETE CEILING

SWITCH OFF THE ELECTRICAL MAINS AT THE CIRCUIT BREAKER FUSE BOX.

❶.Use the Mounting Bracket(A) as a guide, mark the spots where the 4 Expansion Bolts (B) will be drilled.

❷.Remove the Mounting Bracket(A),drill 4 holes and insert 4 Expansion Bolts (2) into the concrete ceiling,install the mounting bracket and secure with Flat Washers (C), Spring Washers (D) and Nuts (E).

IMPORTANT:SCREWS & NUTS MUST BE TIGHTENED TILL SNUG

2.5_Install the hanging part of the ceiling fan.

2.5.1_.Install downrod assembly

Phillips screwdriver 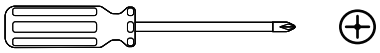

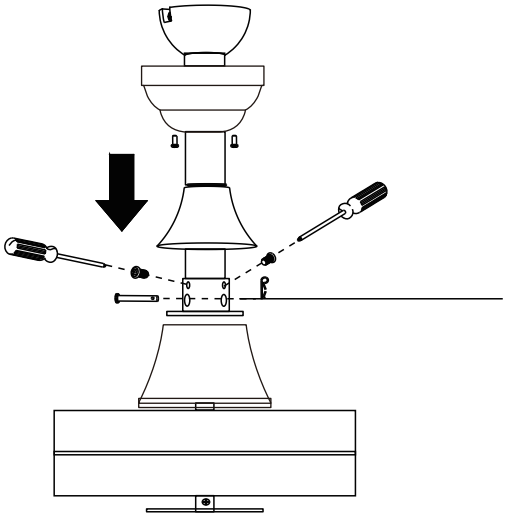

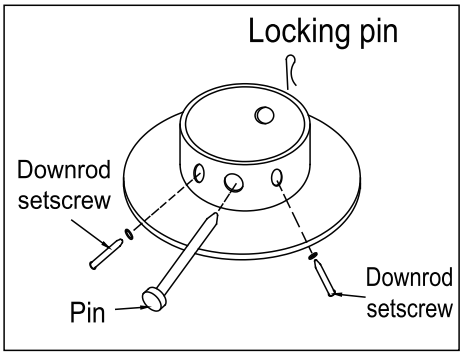

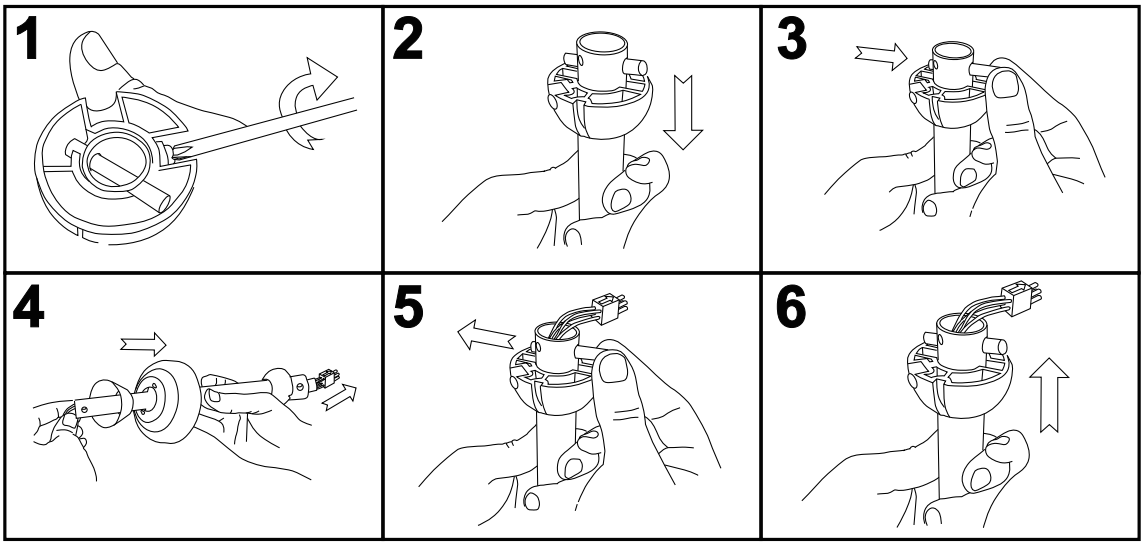

❶.Thread the suspender through the suspended clock and coupling cover .

❷.Then insert the tail of the suspender from the lifting head of the motor.

❸.After the lateral pin is threaded out from the suspendedhead position,insert R type pin.

❹.Tighten the lifting head screws.

❺.Hang the fan of the hanging pipe into the hanger.

2.6_Assembly - Hanging the Fan(continued)

2.6.1_Mount Fan to Bracket

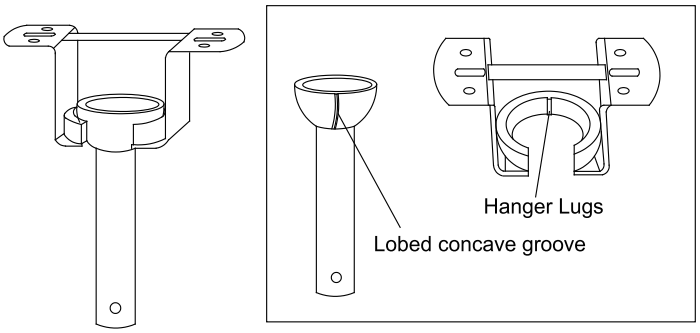

Lift the fan assembly onto the mounting bracket.Ensure the registration slot of the hanger ball is positioned on the stopper of the mounting bracket to prevent the fan from rotating when in operation.

Tips:
Seek the help of another person to hold the stepladder and hang the fan body for you.

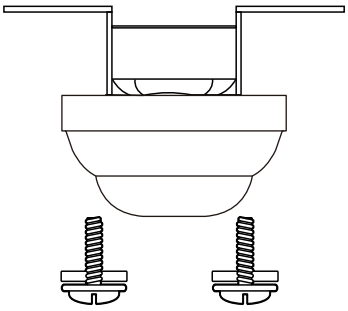

2.6.2_Preparing for mounting

❶.Remove the mounting bracket from the canopy by loosening the two canopy screws located in the L shaped slots.
❷.Remove andsave the two canopy screws in the round holes. This will enable you to remove the mounting bracket.

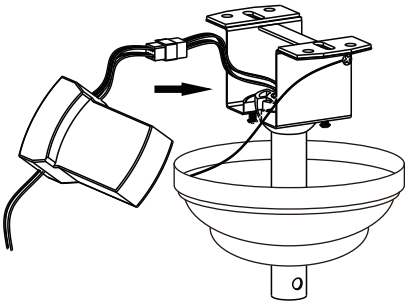

2.6.3_Install remote control

❶.Carefully push the canopy to the bottom of the mounting bracket, make two sliding holes aligned to the two prominent screws on the mounting bracket, and then turn clockwise until tight.
❷.Pushthe canopy ring to the bottom of the canopy, slide the inner holes aligned to the two prominent screws on the mounting bracket again, and turn the canopy ringclockwise untiltight.

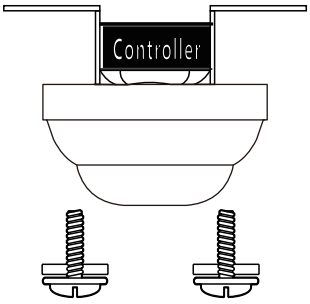

2.6.4_Preparing for mounting

❶.Remove the mounting bracket from the canopy by Controller loosening the two canopy screws located in the L shaped slots.
❷.Remove andsavethe two canopy screws in the round holes. This will enable you to remove the mounting bracket.

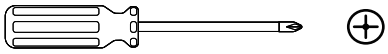

Phillips screwdriver

2.7_Assembly - Attaching the Fan Blades

2.7.1_Fastening the blade to the motor

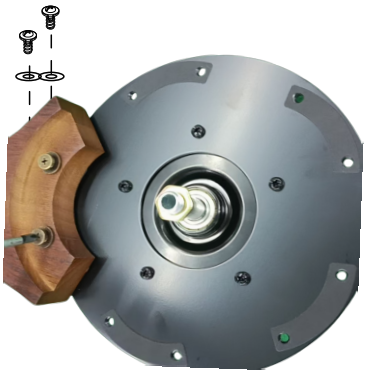

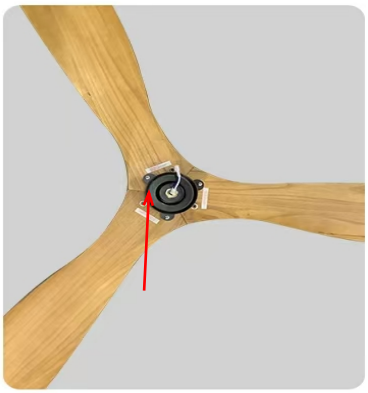

The label surface should be attached to the motor

Insert a blade screw from the package through the blade hole and position it under the motor so that the screw is aligned with the "center" hole position of any group of two screw holes.

❶.Fasten the Blade to the fan-motor assembly by inserting the alignment post into the slot on the bottom of the motor and tightening the pre-installed Blade screws.
❷.Repeat this step for the remainingbladeassemblies.

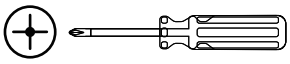

Phillips screwdriver

Attention: The opening of the leaf must face itself

2.8_Assembly - Attaching the COVER

2.8.1_Install the safety buckle

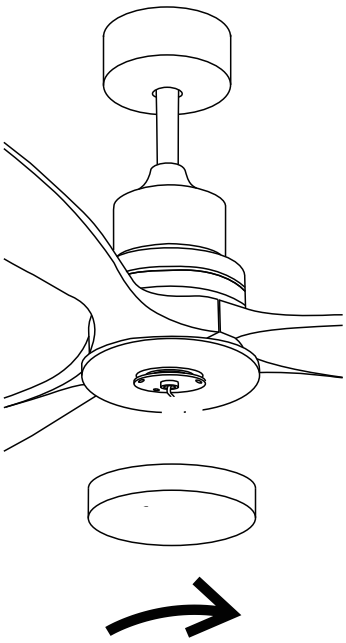

INSTALL THE COVER AS SHOWN

Remote control operation instructions

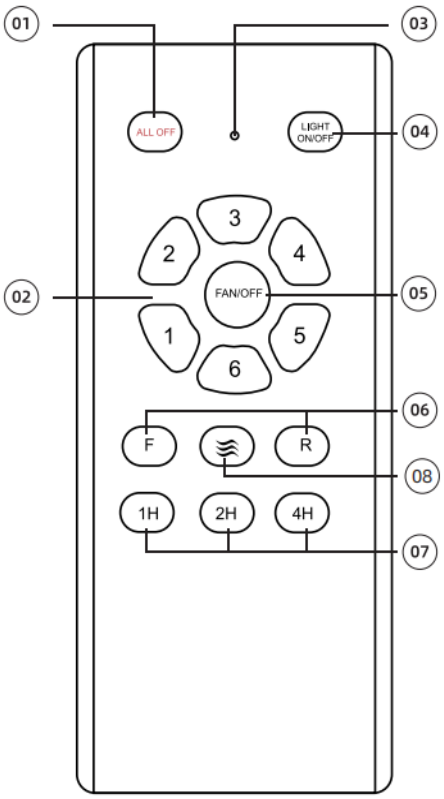

1. Turn off all Loads
2. Fan Speed Control
3. LED Indicator Light
4. Turn On the Light
5. Fan Off (Include Wind Speed and Lights)
6. Fan Forward and Counter Rotation Control
7. Fan Timing Control
8. Natural Wind

Warmer Tip:

1. If the remote control is used normally, there is no need to perform code matching operation;
2. If the following three situations occur, you need to try to match the code:
(1) When the remote control cannot control the fan normally;
(2) After the APP network configuration fails, the remote control cannot control the fan;
(3) When you don't use it for a long time and the remote control can't control the fan.

Solution to remote control pairing failure:

Step 1: Turn off the wall switch and wait for 10 seconds. Remember not to switch the power on and off continuously.
Step 2: Turn on the wall switch and wait for the light to light up for 2 seconds.
Step 3: Immediately press and hold the " 2H " button on the remote control for about 5-20 seconds. The light flashes to indicate successful pairing.