ASSEMBLY INSTRUCTIONS

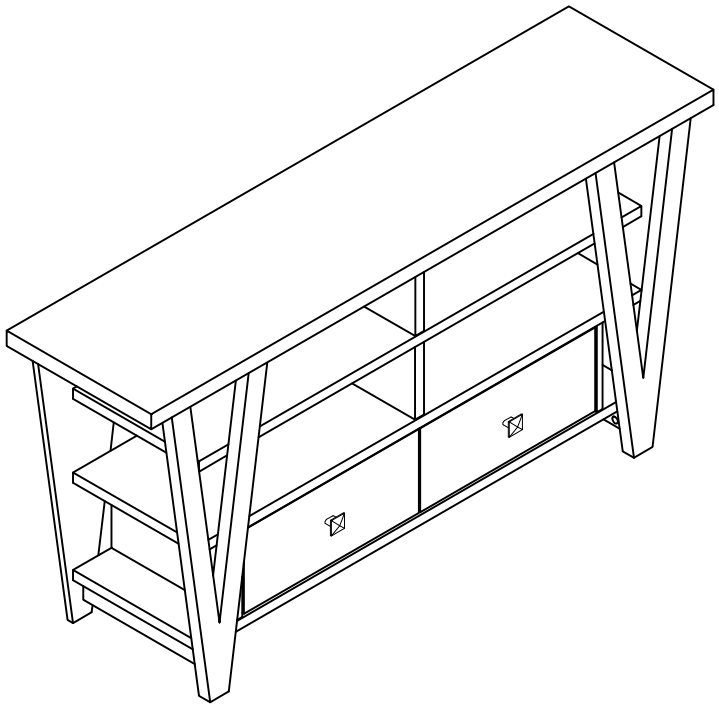

ASSEMBLY INSTRUCTIONS

ASSEMBLY TIPS:

1.Remove hardware from box and sort by size.

2.Please check to see that all hardware and parts are present prior to start of assembly.

3.Please follow attached instructions in the same sequence as numbered to assure fast & easy assembly.

⚠ Warning ! !

1. Don't attempt to repair or modify parts that are broken or defective. Please contact the store immediately.
2. This product is for home use only and not intended for commercial establishment.





ASSEMBLY TIME | **30 MINUTES**

PARTS IDENTIFICATION

(A) TOP	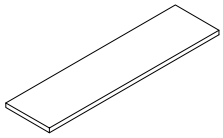	1 PC	(G) BOTTOM DIVIDER PANEL	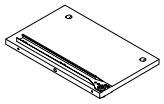	1 PC
(B) DIVIDER PANEL	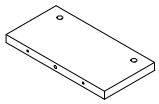	2 PCS	(H) BOTTOM PANEL	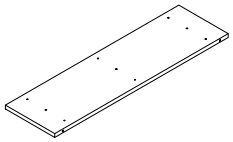	1 PC
(C) UPPER SHELF	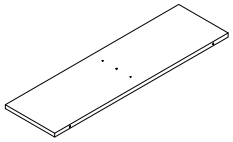	1 PC	(I) LEFT BOTTOM SUPPORT	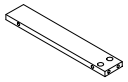	1 PC
(D) LOWER SHELF	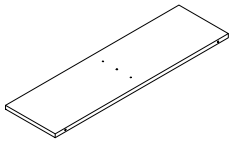	1 PC	(J) RIGHT BOTTOM SUPPORT	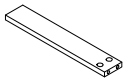	1 PC
(E) LEFT SIDE PANEL	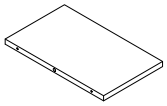	1 PC	(K) LEFT V LEG	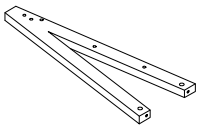	1 PC
(F) RIGHT SIDE PANEL	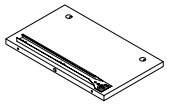	1 PC	(L) RIGHT V LEG	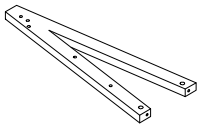	1 PC

PARTS IDENTIFICATION

(N) LEFT LEG 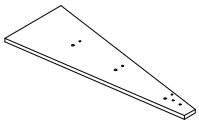 1 PC

(M) RIGHT LEG 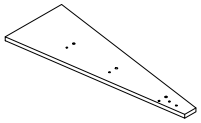 1 PC

(O) LEFT DRAWER FRONT PANEL 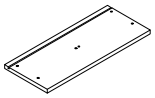 1 PC

(P) RIGHT DRAWER FRONT PANEL 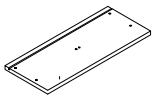 1 PC

(Q) DRAWER LEFT SIDE PANEL 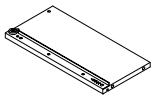 2 PCS

(R) DRAWER RIGHT SIDE PANEL 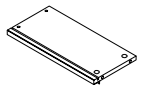 2 PCS

(S) DRAWER BACK PANEL 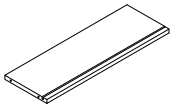 2 PCS

(T) DRAWER BOTTOM PANEL 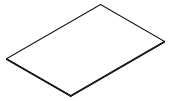 2 PCS

(U) BACK PANEL 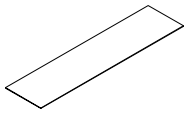 1 PC

HARDWARE IDENTIFICATION

1	DOWEL	ϕ8x25mm		22pcs
2	EXTRA LARGE SCREW	ϕ4x45mm	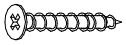	10pcs
3	LARGE CAMBOLT	L29mm		28pcs
4	LARGE CAMLOCK	ϕ15mm		28pcs
5	STICKER	ϕ20mm		8pcs
6	BLACK STICKER	ϕ20mm(BK)		4pcs
7	LARGE SCREW	ϕ4x35mm	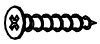	10pcs
8	METAL LEG	80x25x102mm(BK)		1pc
9	FLAT-HEAD SCREW	M6x12mm		2pcs
10	NAIL			26pcs
11	SMALL CAMBOLT	L20mm	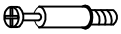	8pcs
12	SMALL CAMLOCK	ϕ12mm		8pcs
13	HANDLE	30x30x20mm		2pcs
14	HANDLE SCREW	ϕ4x22mm(BK)		4pcs
15	MEDIUM SCREW	ϕ4x30mm	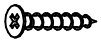	8pcs
16	THE RESTRAINT STRAP	197×5×1mm		1pc
17	SMALL SCREW	ϕ4x25mm		1pc
18	WALL SCREW	ϕ5x40mm		1pc
19	PLASTIC ANCHOR	ϕ8x40mm	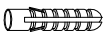	1pc
20	BRACKET	12×12×1mm		2pcs
21	GLUE		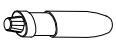	1pc

ASSEMBLY INSTRUCTIONS

STEP 1

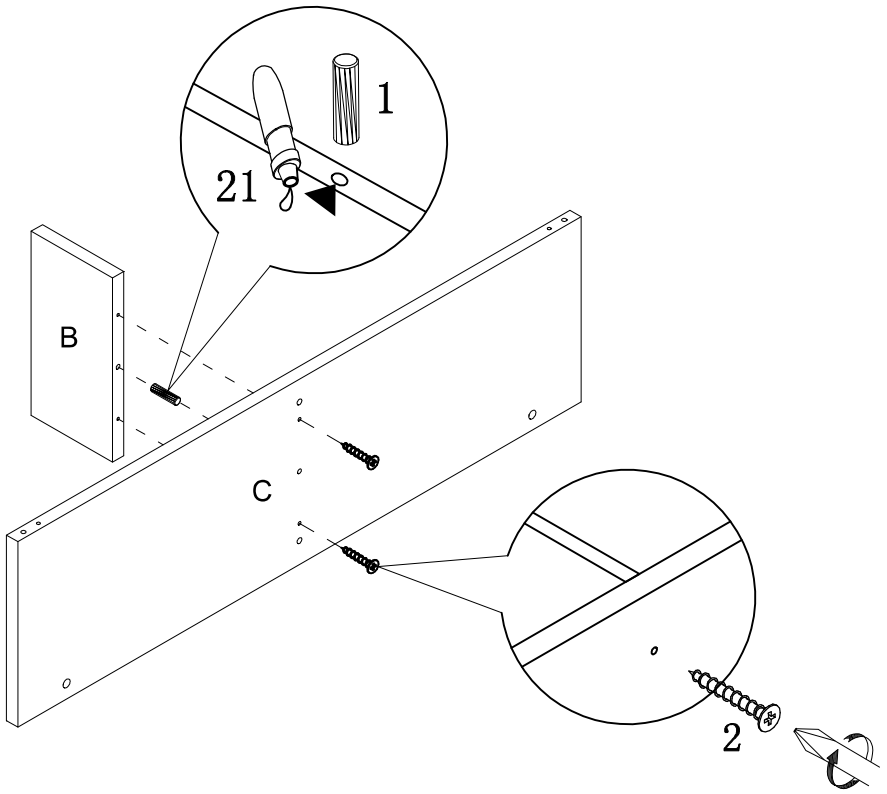

STEP 2

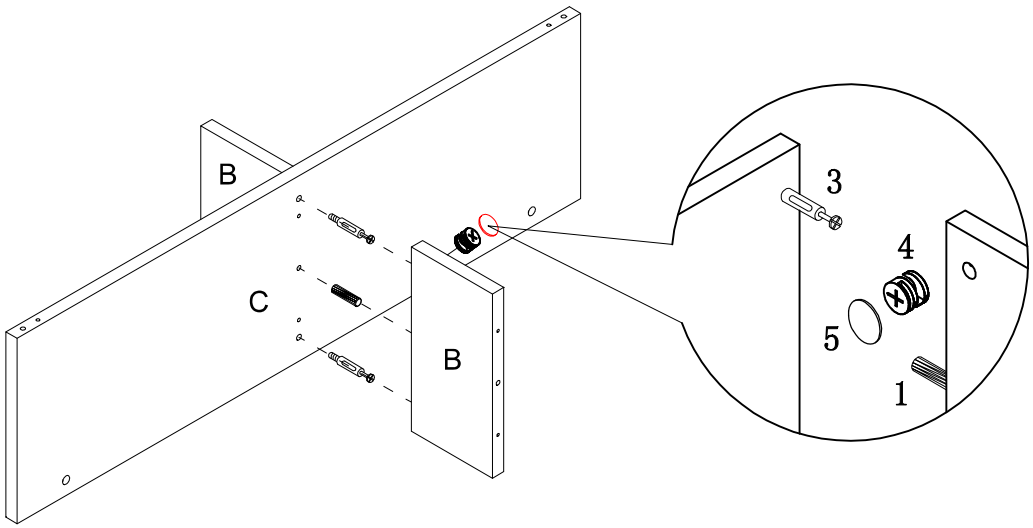

ASSEMBLY INSTRUCTIONS

STEP 3

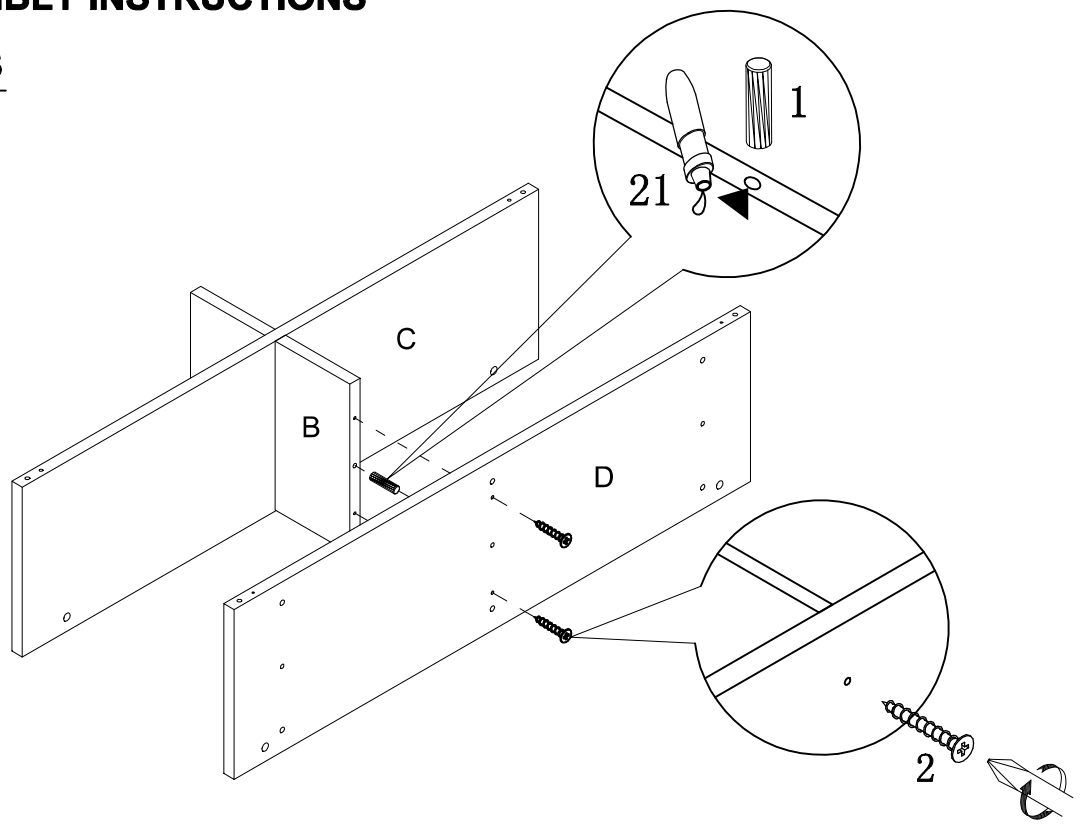

STEP 4

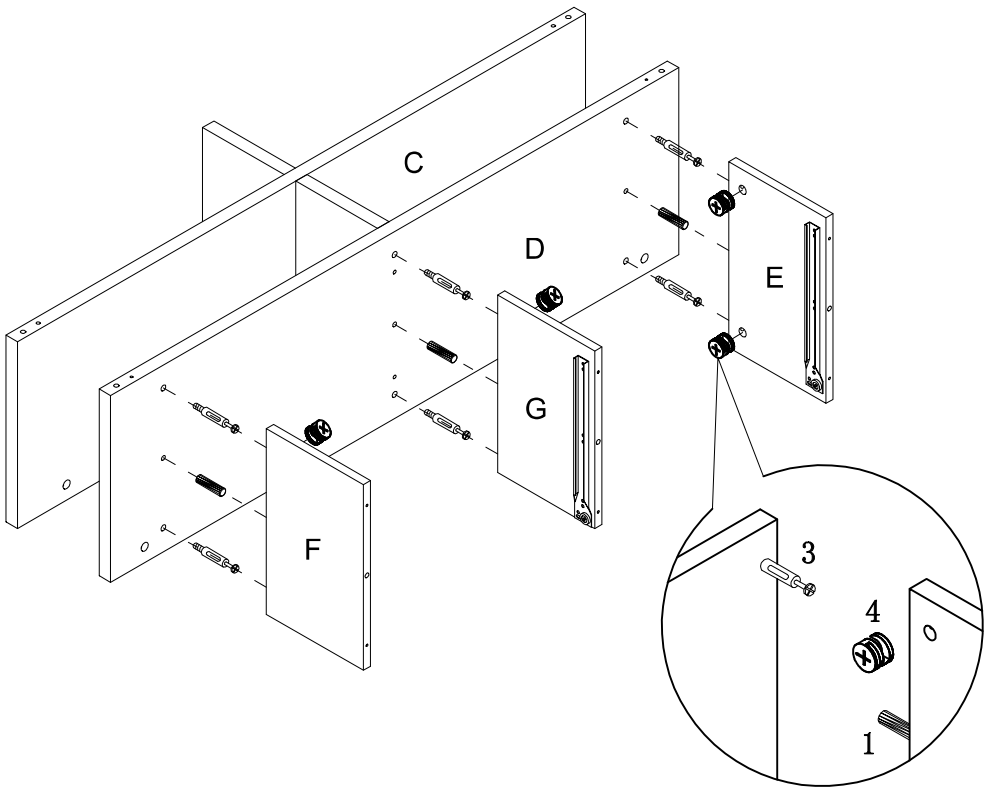

ASSEMBLY INSTRUCTIONS

STEP 5

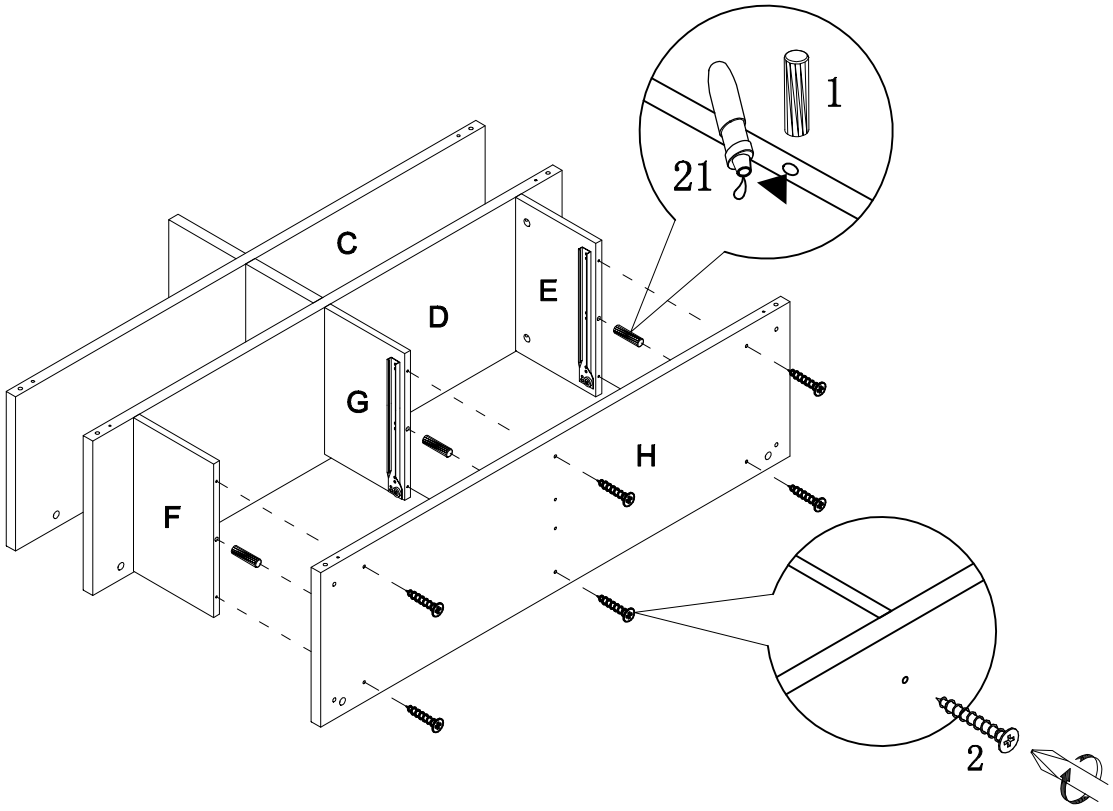

STEP 6

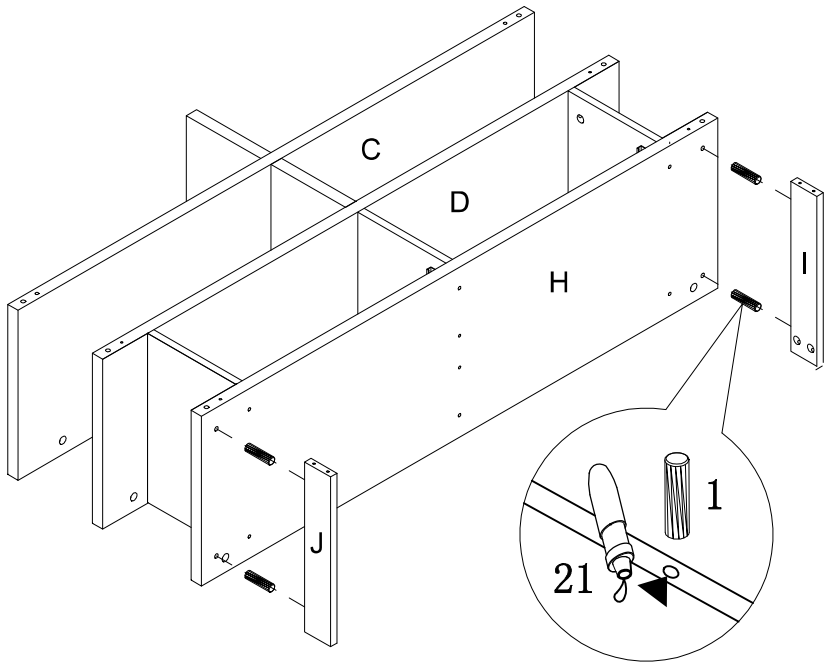

ASSEMBLY INSTRUCTIONS

STEP 7

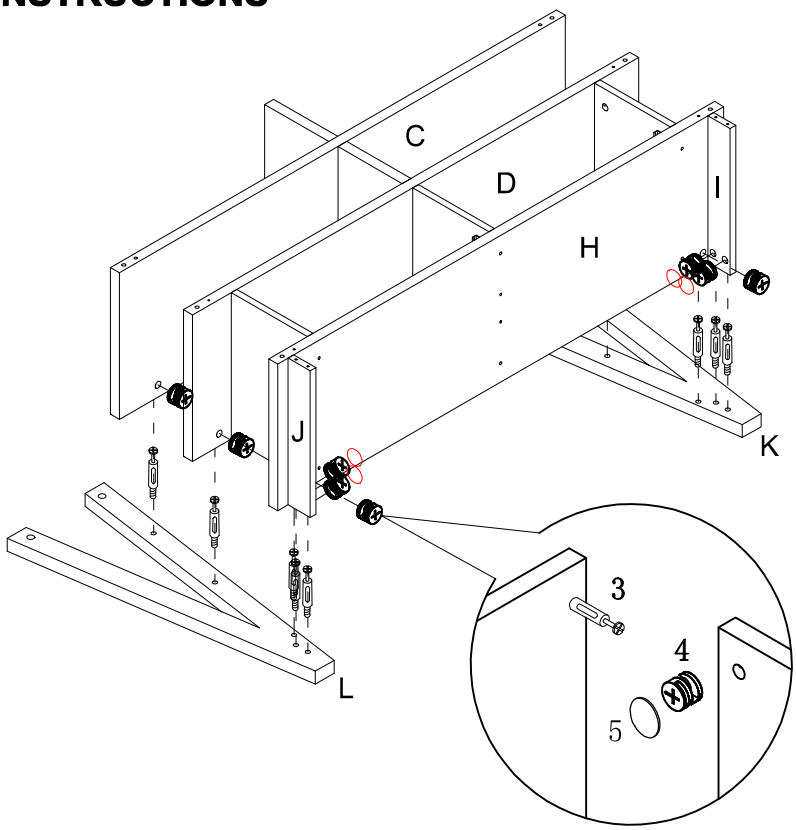

STEP 8

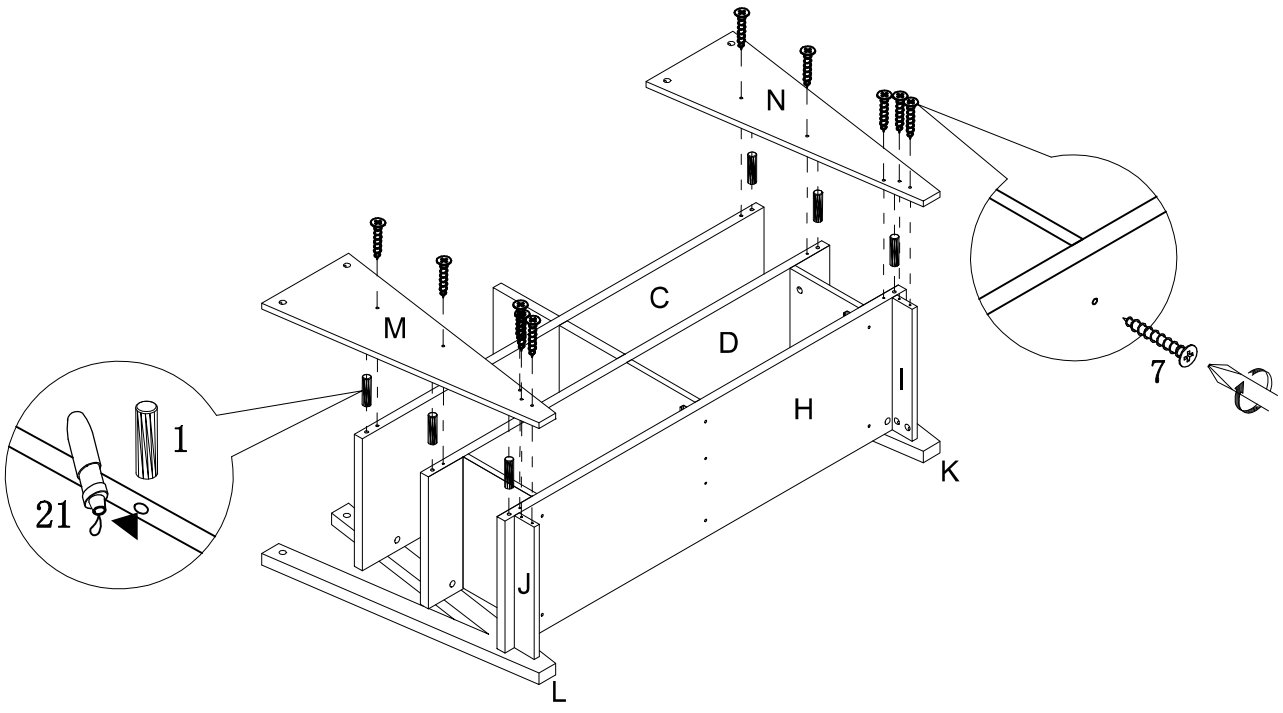

ASSEMBLY INSTRUCTIONS

STEP 9

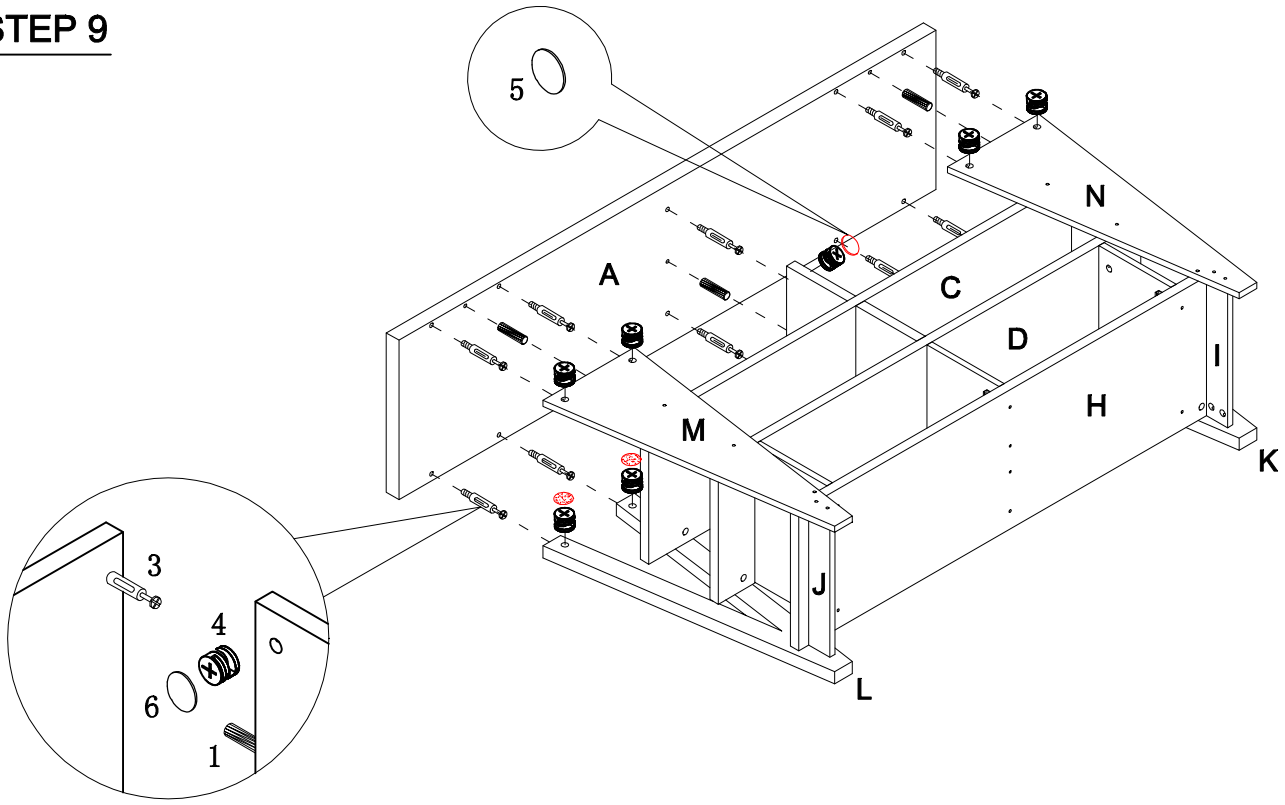

STEP 10

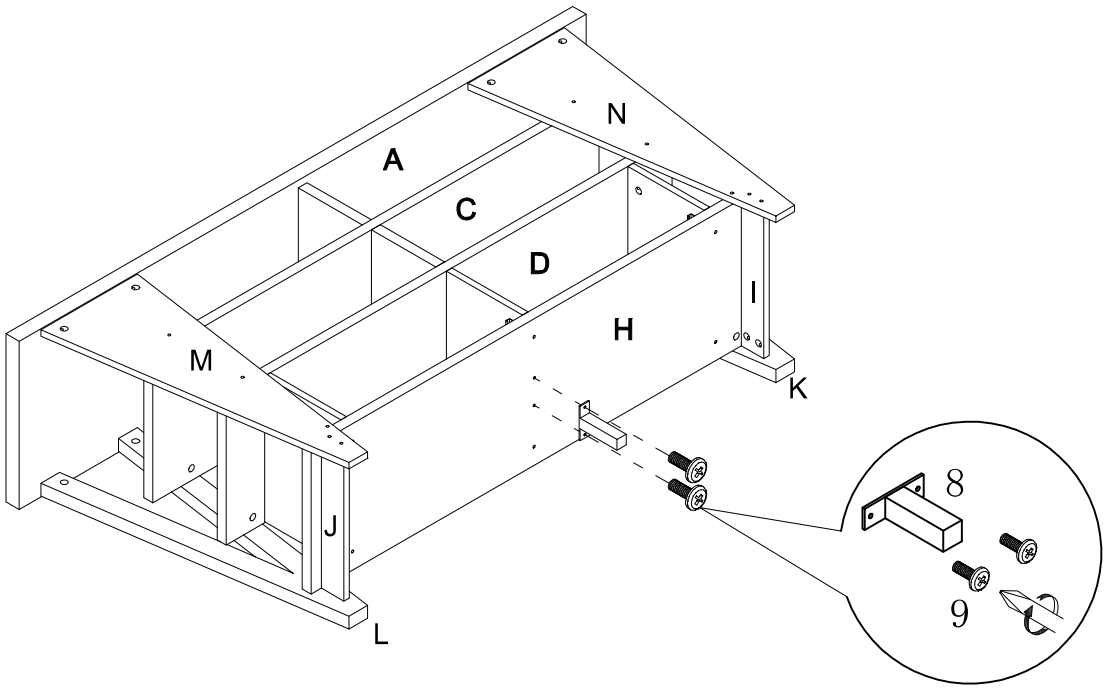

ASSEMBLY INSTRUCTIONS

STEP 11

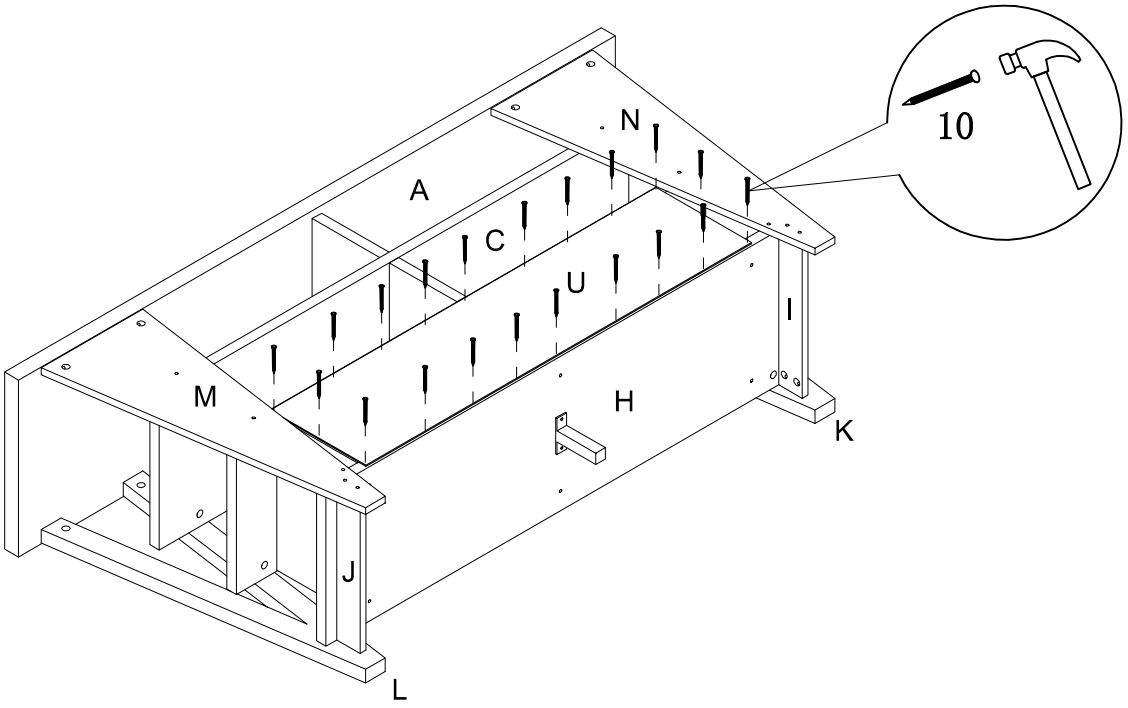

STEP 12

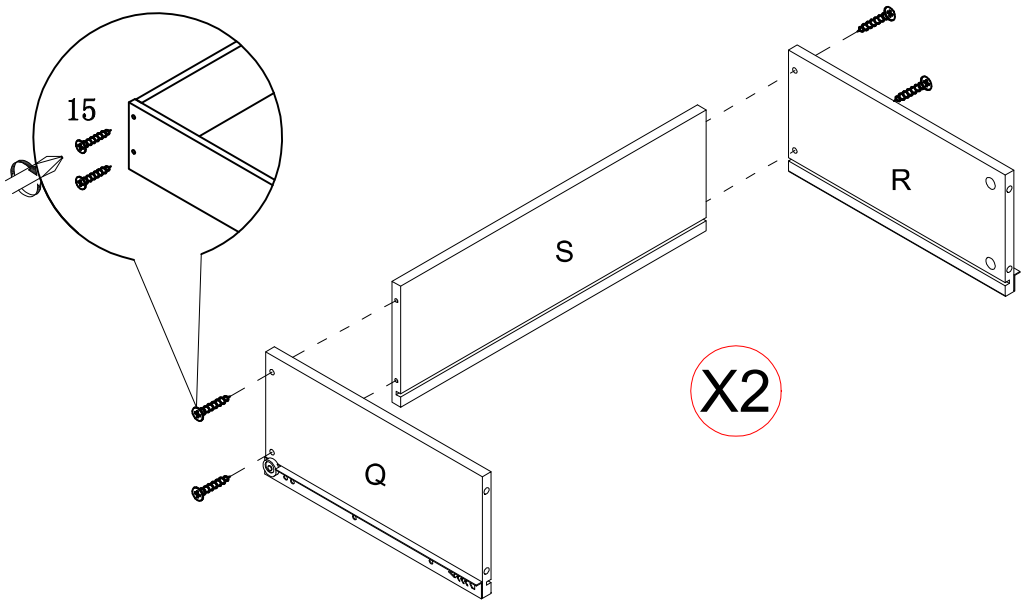

ASSEMBLY INSTRUCTIONS

STEP 13

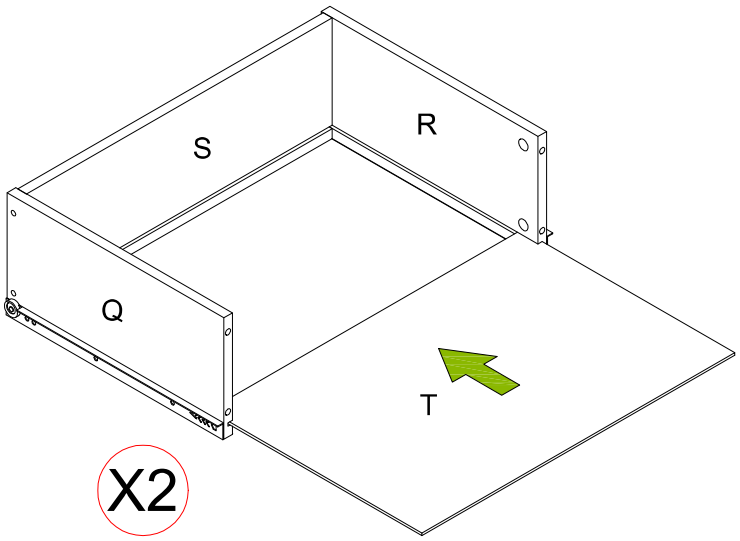

STEP 14

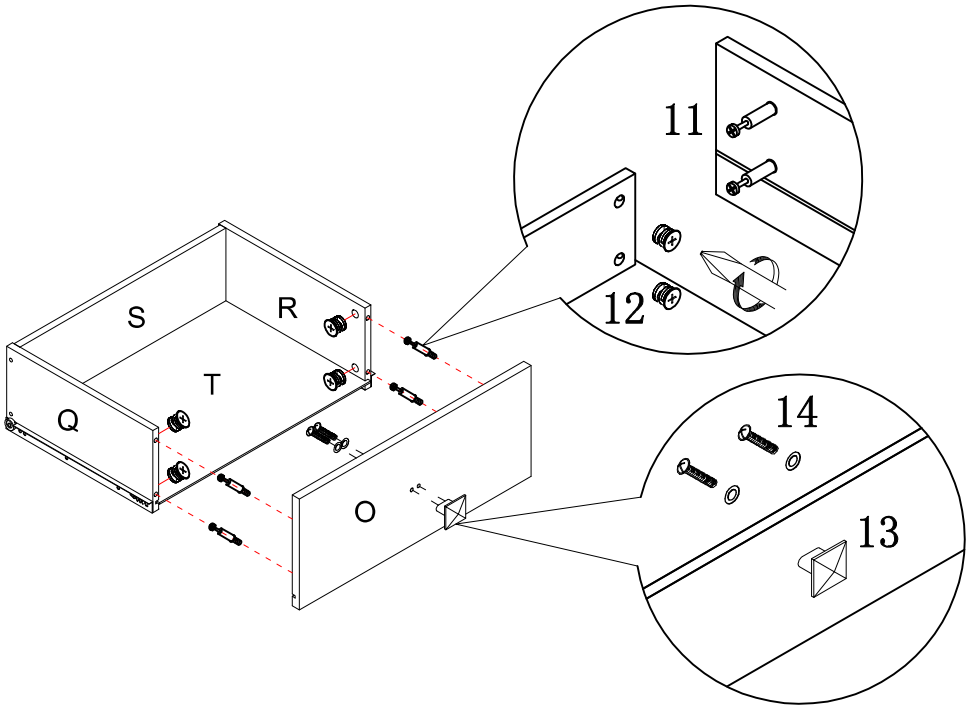

ASSEMBLY INSTRUCTIONS

STEP 15

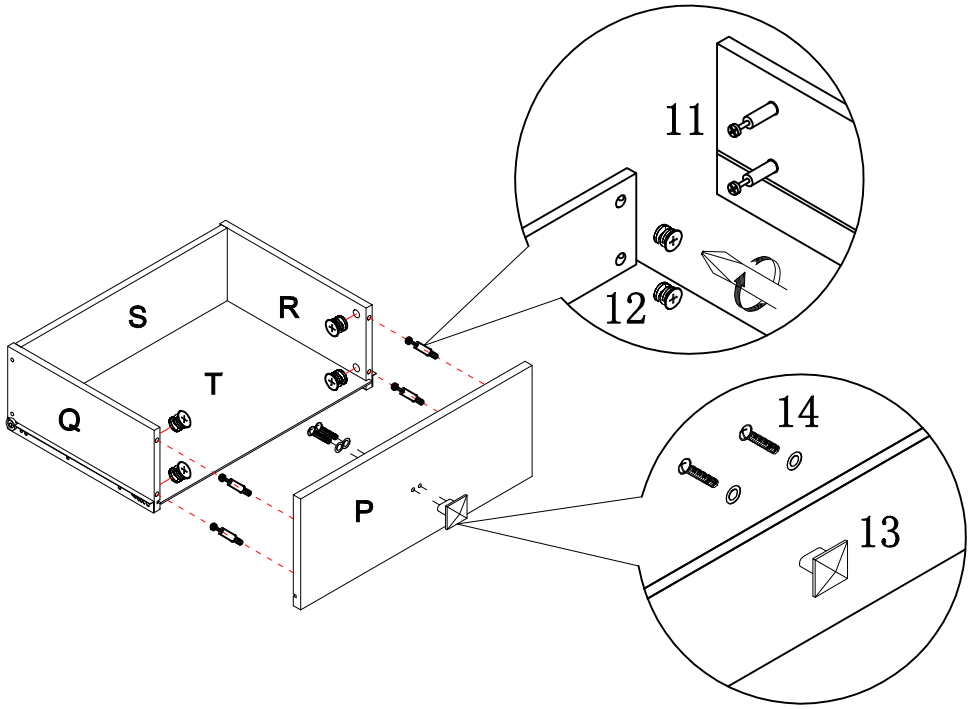

STEP 16

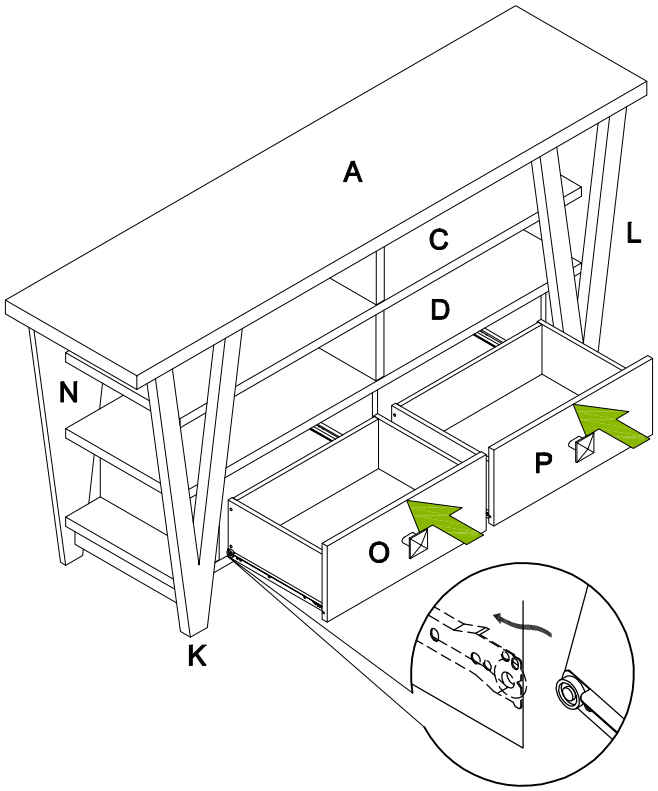

ANTI-TIPPING INSTALLMENT INSTRUCTIONS

FURNITURE TIPPING RESTRAINT

WARNING

Injury may result from tipping furniture.
This restraint may protect against tipping furniture.
Do not allow children to climb on furniture.
This restraint is not a substitute for proper adult supervision.
Failure to detach this restraint before moving the furnituremay result in injury and damage.

This tip restraint must be attached to a wall stud using long screw enclosed.

STEP 1

Attach a bracket securely to the back top rail to the furniture using short screw provided, through the smaller hole.

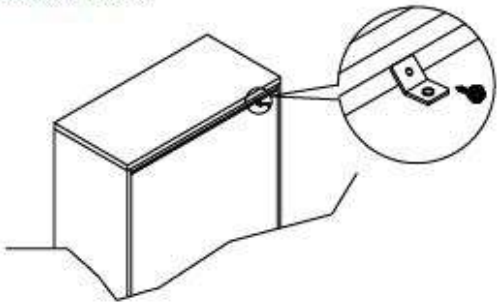

STEP 2

Locate the other bracket on the wall over a wall stud and two inches below the mounting bracket secured to the back of the furniture. Attach the wall stud using the long screw provided, through the smaller hole.

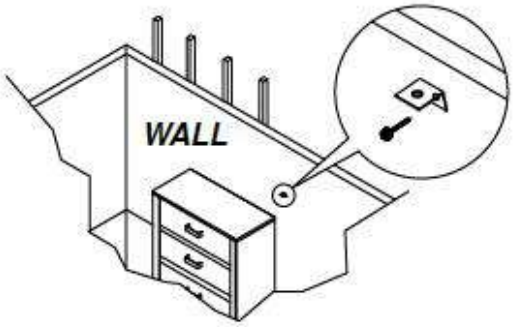

STEP 3

Place the furniture into position so both mounting brackets are vertically in line. Lace the end of the restraint strap through the larger hole in each mounting bracket. Bring both ends together and slide the flat end through the locking and draw it until all slack is removed. Confirm that the strap is securely laced and locked.

