Condo

read first

REVIEW BEFORE ASSEMBLY

- TOOLS: Allen wrench is included. No other tools are necessary.

For assistance or replacement, please contact us.

1 PIECES

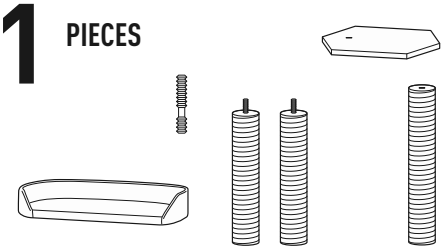

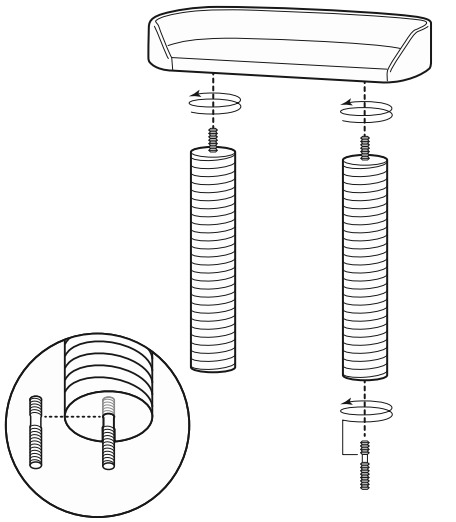

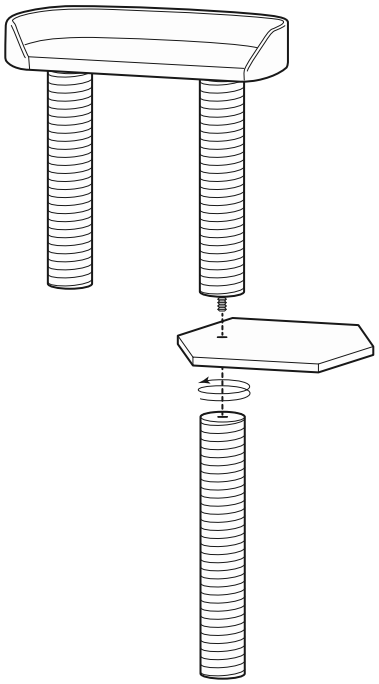

2 PIECES

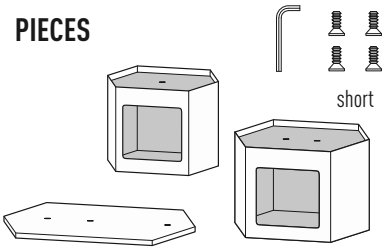

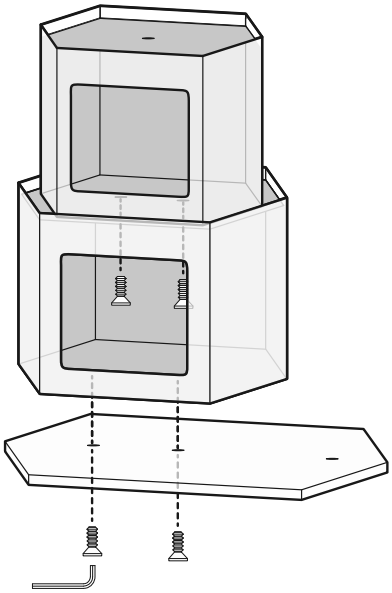

3 PIECES

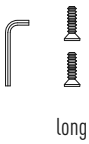

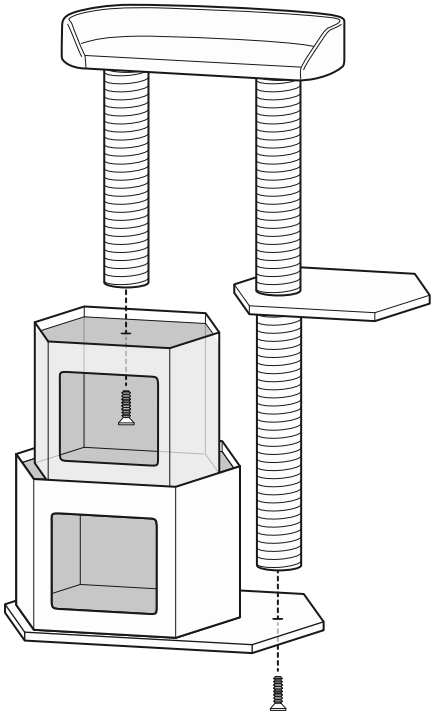

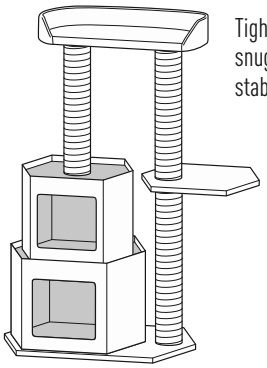

Tighten screws snuggly to create stable connections.

Assembly completed.

Made in China