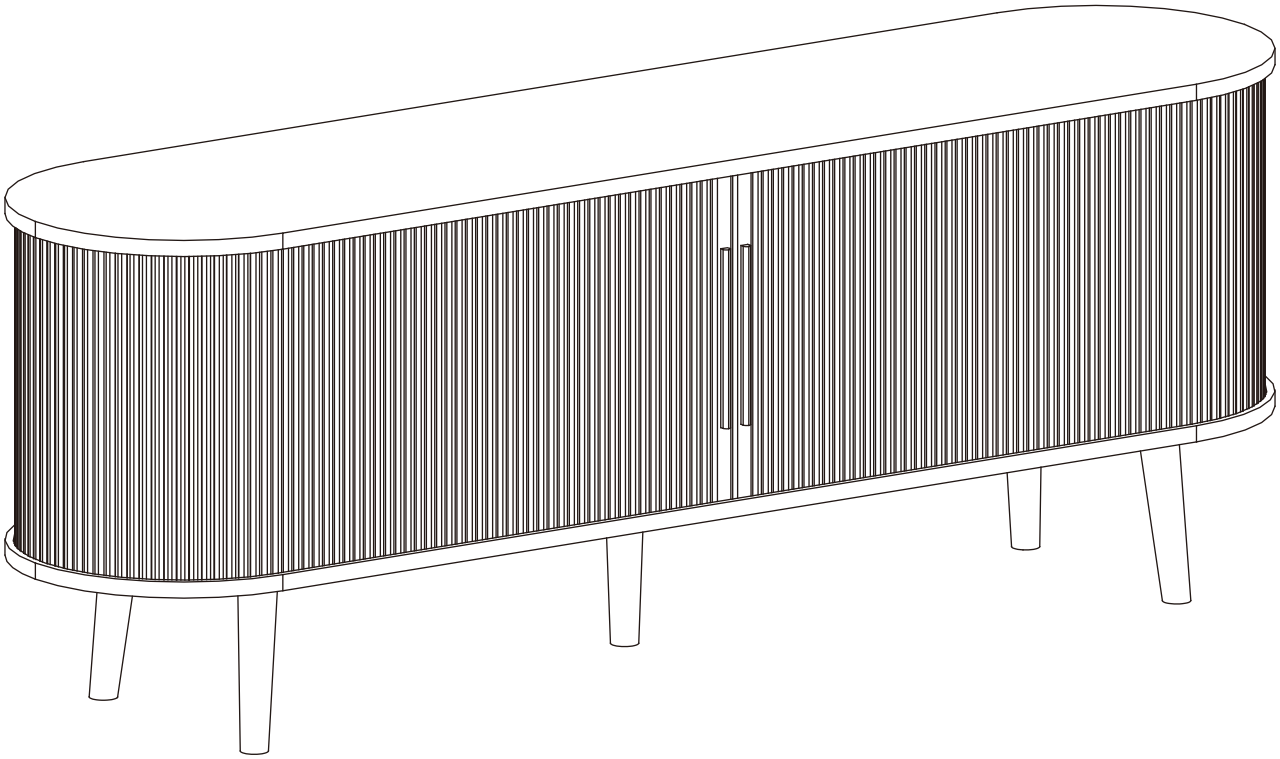

Assembly Instructions & Care Guide

Illustrations in this guide are for reference only and may differ slightly from the actual product.

CONTENT

Before You Start

Overview ---------- 01
Caution ---------- 01
Material Specifications ---------- 01

Installation Guide

Exploded Views ---------- 02
Component Parts ---------- 03
Hardware ---------- 03
Assembly Directions ---------- 04–05
Troubleshoot ---------- 06

Usage and Maintenance

Use and Care ---------- 07

Other

Help Center ---------- 08

Before You Start

Overview

1. Check and ensure you have received all packages and necessary parts.
2. Prepare adequate assembly space. We recommend using pads or cardboard to prevent the floor from scratches.
3. Read the instructions to familiarize yourself with the assembly requirements. Allow sufficient time and have someone available to assist you if needed.
4. Place all hardware on a soft surface for easy identification.
5. The seller is not responsible for any damage or injury caused by improper assembly or use.
6. If you need further assistance, please contact us through

Caution

1. Children must not assemble this product. During assembly, keep small parts away from children as swallowing or inhaling them could be fatal.
2. Do not allow children to stand, climb, or play on the product, as it may tip over and cause serious injury.
3. Keep plastic packaging bags away from children to prevent risks of suffocation.
4. Avoid sharp objects and corrosive chemicals to prevent product damage or personal injury.

Material Specifications

Solid Wood

Natural grains, scars, and color variations are inherent in real wood, which contribute to its unique beauty. Slight color changes may occur under different lighting and angles, due to variations in wood grain and light intensity.

Marble and Engineered Stone

Each marble and engineered stone piece has a unique pattern. Due to the nature of the materials, the pattern may differ from the one you see when purchasing.

Exploded Views

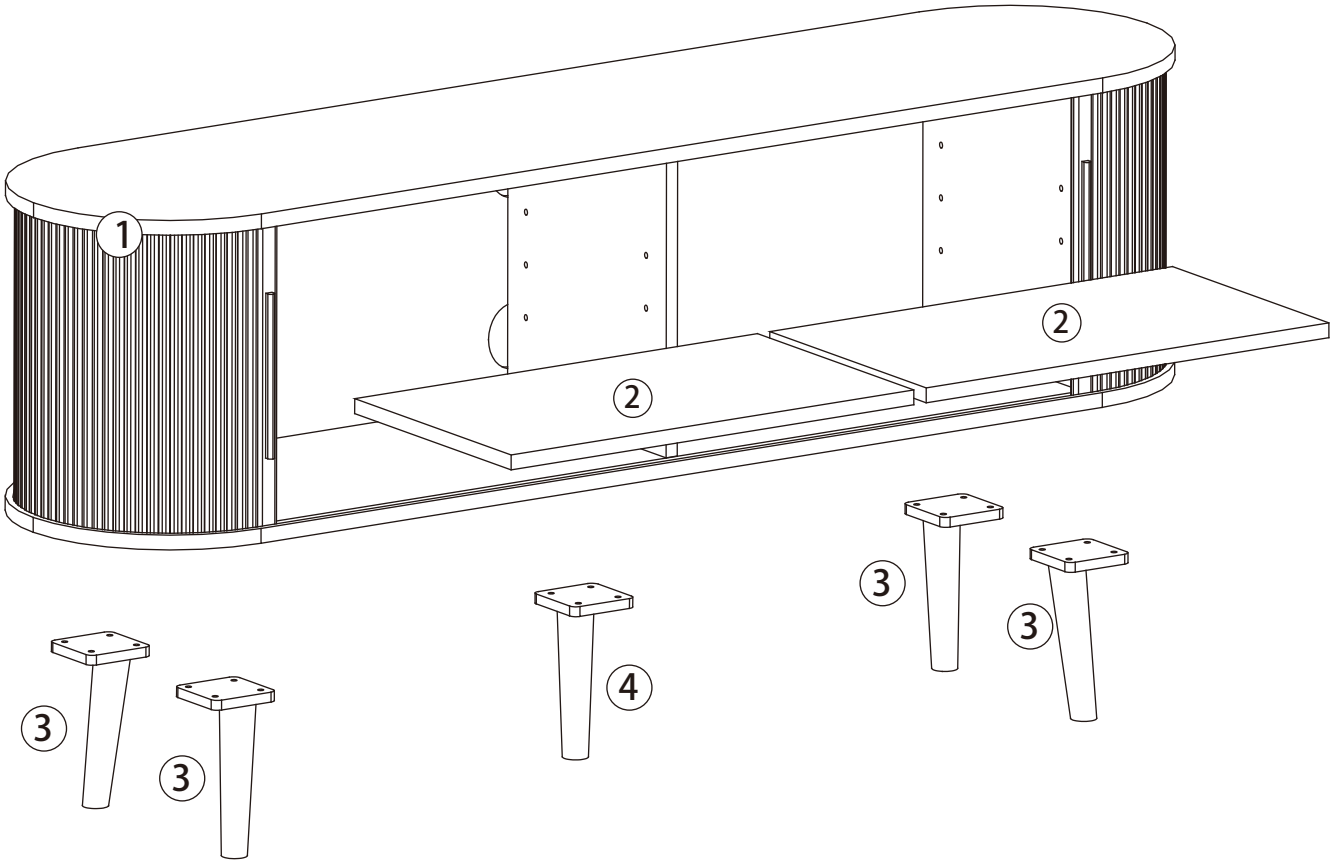

Component Parts

① x1

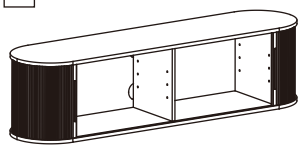

② x2

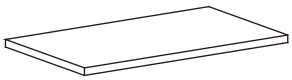

③ x4

④ x1

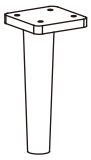

Hardware

Ax20（+2）

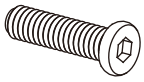

Ø1/4"*25

Bx1

Cx8

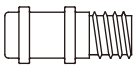

Dx5

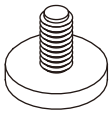

Ex2

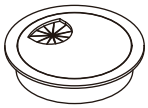

60MM

Fx20（+2）

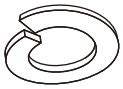

Gx20（+2）

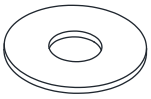

Install your new product with care, following the instructions step-by-step. Do not skip any steps. Carefully distinguish between left and right components. Do not over-tighten screws or use power tools, as this may damage the product.

Tools You May Need

*You might need a screwdriver (+/-) to complete this assembly.

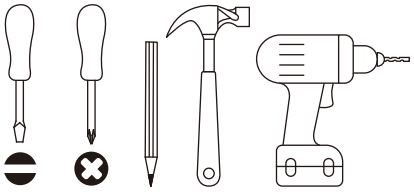

Persons and Time Needed For Assembly

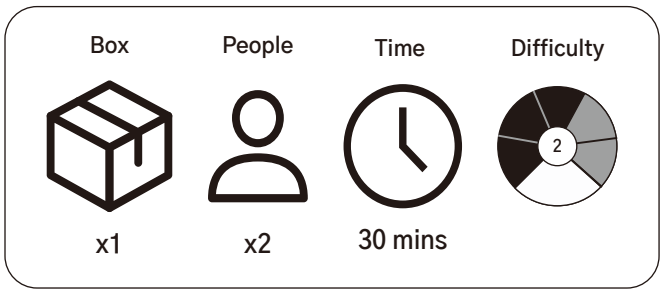

Assembly Directions

Step 1

D x5

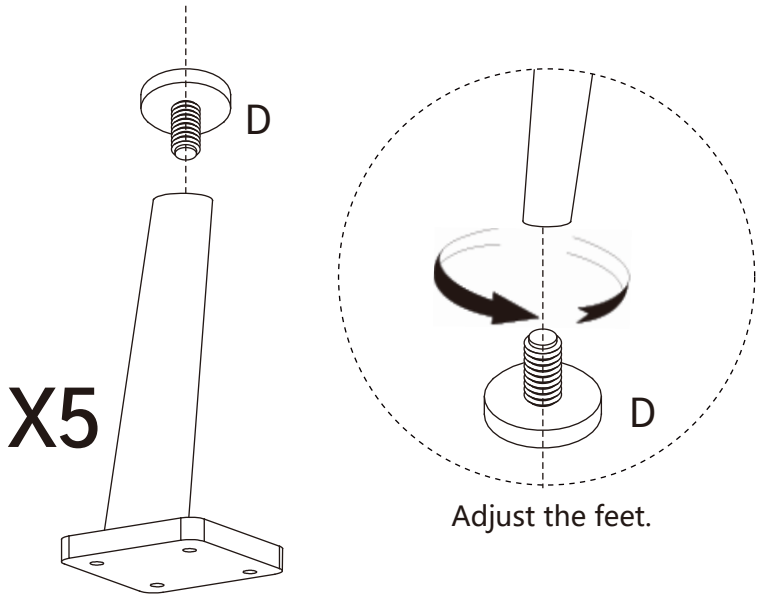

Step 2

A x20

B x1

F x20

G x20

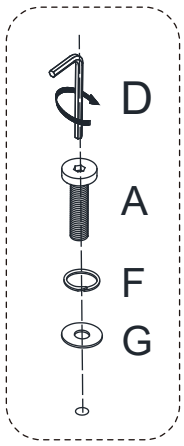

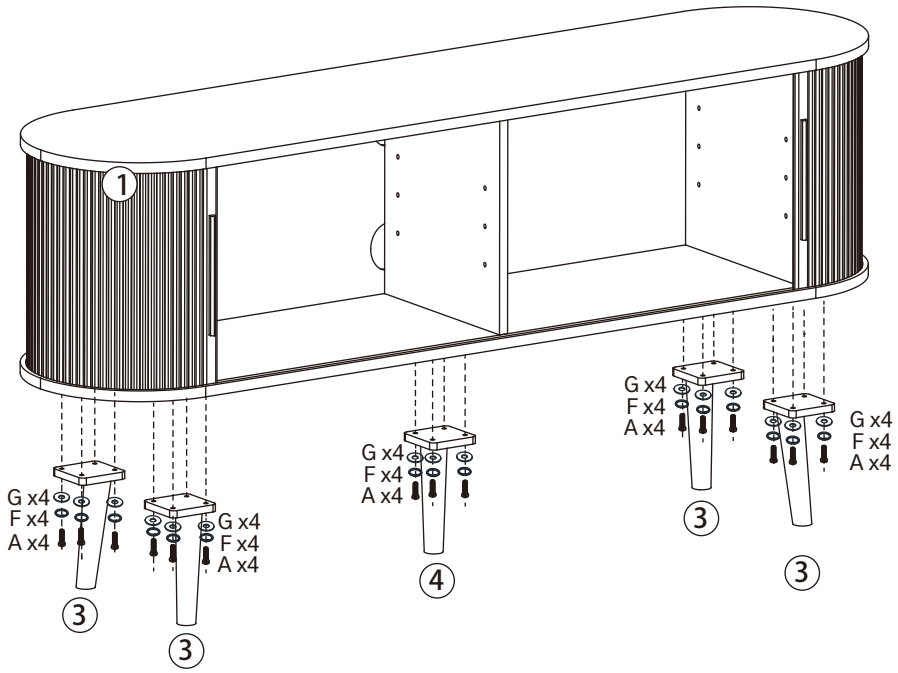

Step 3

C x8

E x2

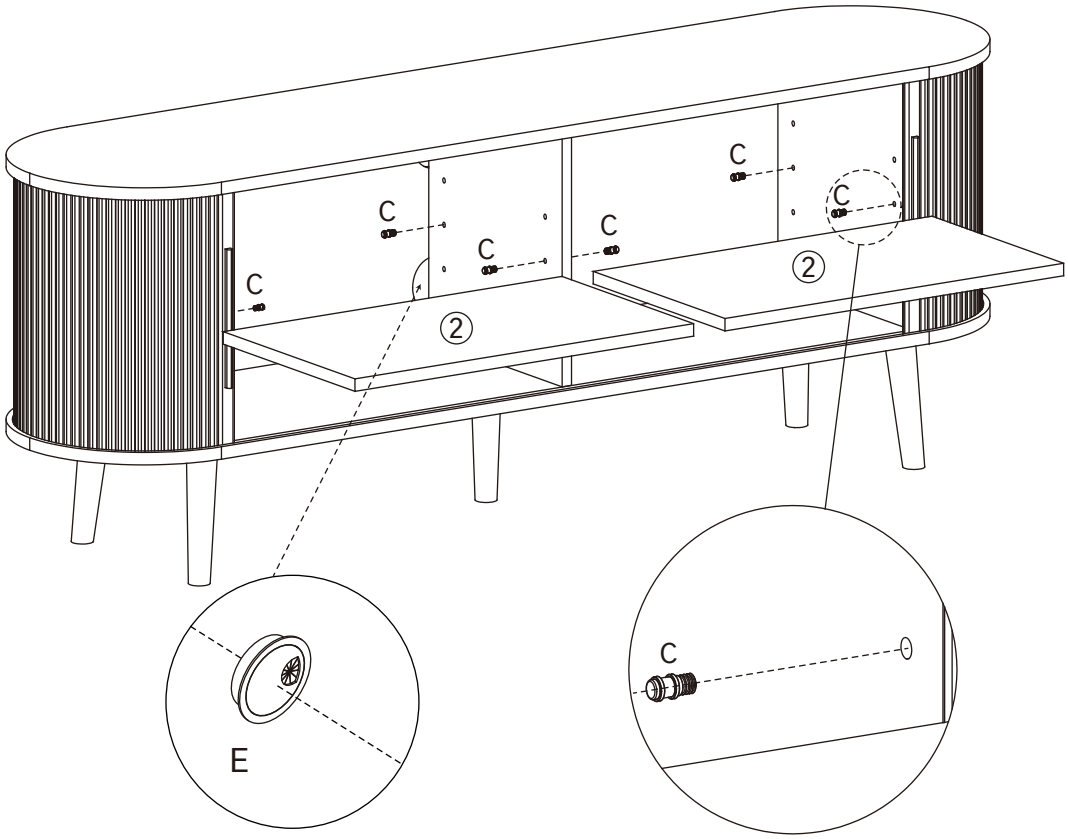

Step 4

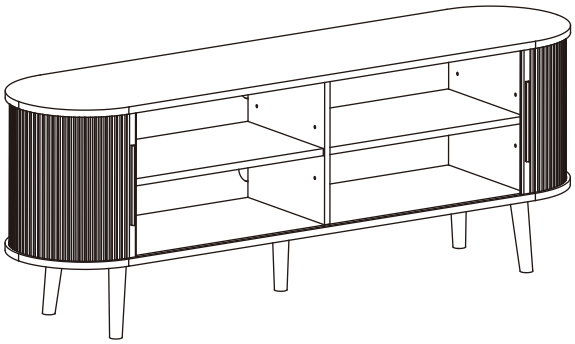

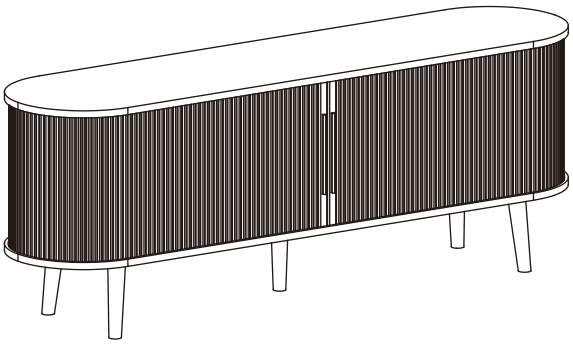

Finished!

Fantastic, we're nearly there! Please carry out the following checks:

1. Have you tightened all the screws?

2. Are the levelers aligned with and making contact with the ground?

Troubleshoot

Product Category	Fault	Cause Analysis	Handing Method
Wood furniture	Door opening is not flexible	The furniture is not leveled	Use items to level the furniture
		The door hinges should be adjusted properly.	Adjust door hinges and apply lubricating oil.
	Inflexible opening of drawer	Overload or deformation	Reduce weight,adjust guide rails, lubricate
	Loose component connection	Loose hinges or screws	The poke part should be coated with an appropriate amount of 502 glue, then re-install or tighten the screws.
	Minor scratches	friction with hard o sharp objects	Use a brush to apply similar pigment ink along wood grain to the scratches, then wipe off the excess.
	Corrosive stains	Accidentally stained with chemical solvents such as nail polish, nail polish remover, ect.	Wipe them with a dry cotton cloth immediately

Possible Issues During Assembly:

- The two boards can't be aligned at he same level.

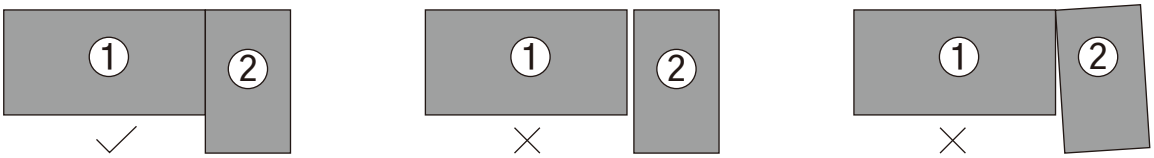

- Holes on the bards and poles are not aligned, so screws can't be installed.

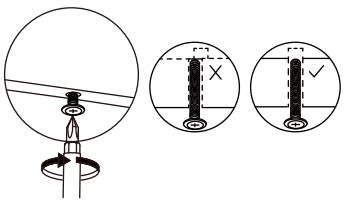

Recommended Solution:

- Please sightly loosen all screws and adjust the bards. Because the diameter of the holes on the pipes 23 mm lager than that of bots, the position of the boards can be adjusted.

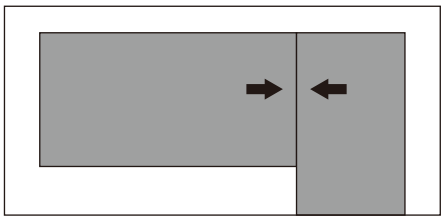

- If it is still doesn't work after adjustment, please contact us for more solutions.

Usage and Maintenance

Use and Care

- Leave it vacant for half a month before use, maintain good ventilation to eliminate any odor.
- Place items steadily, heavier items should be placed at the bottom to avoid tipping over. For high temperature or frozen items, please put a heat-resistant pad underneath.
- Do not directly push or drag hard objects on the furniture to avoid scratching the surface.
- Avoid prolonged exposure to sunlight or heat sources to prevent discoloration or fading.
- Pay attention to moisture prevention to avoid mold. Keep the furniture placed steadily to prevent breakage or loosening.
- Please educate children to stay away from the glass sharp corners of the furniture.
- When opening and closing doors or drawers, handle them gently and check the screws regularly to tighten them.
- Use a soft dry cloth to dust, a slightly damp cloth to clean the surface, avoid abrasive cleaners.

Help Center

Treat your furniture with care and follow the maintenance guidelines. In return, your furniture will provide you with lasting comfort and support. For any additional inquiries or assistance, please do not hesitate to contact us

Inquiry

Assembly issue

Missing parts

Returns&Refunds

We look forward to seeing you again soon.