Assembly Instruction

Please keep properly for future reference.

If you find any missing boxes, damaged parts, or accessory shortages, please contact the customer service team of your purchasing channel immediately. We will resolve the issue as quickly as possible.

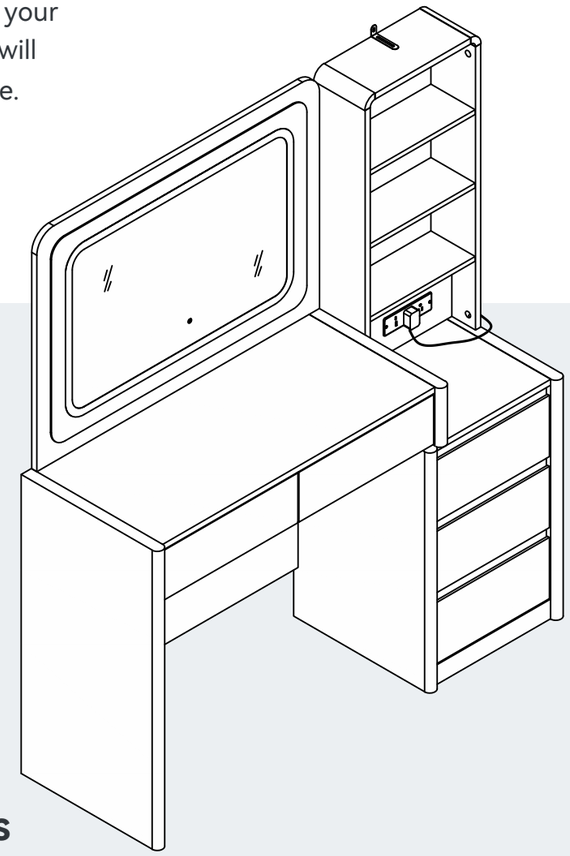

CONTACT US

. Email: service@grandtunnel.com
In order to receive assistance more quickly, please provide

THE FOLLOWING INFORMATION:

. Order number
. Purchase platform
. Purchase date
. Detailed description of the issue along with photos (if applicable)

Important - Please read these instructions carefully before starting the installation.

Assembly Instruction

SKU:
C002806010
C002806020
C002806030

V1.0

EN

Before Assembly

Thank you for choosing our product!
To ensure a smooth installation process, please read this guide carefully to familiarize yourself with the required tools, materials, and installation steps.
Follow the relevant sections to avoid any damage caused by improper installation, and make sure to review all operation and safety guidelines for correct installation procedures.

Packaging Notice:

If you find any missing boxes, damaged parts, or accessory shortages, please contact the customer service team of your purchasing channel immediately. We will resolve the issue as quickly as possible.

Safety and Care Advice

Impo ant :
Please read these instructions fully before staing as咔sembly.

- Check you have all the components and tools listed on the following pages.
- Remove all fittings from the plastic bags and separate them into their groups.
- Keep children and animals away from the work area, small parts could choke if swallowed.
- Make sure you have enough space to layout the parts before starting.
- During assembly do not stand or put weight on the product, this could cause damage.
- Assemble the item as close to its final position (in the same room) as possible.
- Assemble on a soft level surface to avoid damaging the unit or your floor.
- Parts of the assembly will be easier with 2 people.



- To reduce the likelihood of damaging your product please ensure that your power drill is set on a low torque setting.

Email : **service@grandtunnel.com**

Care and Maintenance

- Only clean using a damp cloth and mild detergent, do not use bleach or abrasive cleaners.
- From time to time check that there are no loose screws on this unit.
- This product should not be discarded with household waste. Take to your local authority waste disposal center.

Handy Hints

- Assemble all parts and bolts loosely during assembly, only once the product is complete should you fully tighten the bolts.
- Regularly check and ensure that all bolts and fittings are tightened properly.

Warning

In order to help prevent overturning, please follow these instructions.

- Use the anti tip strap or wall fixing method provided (if applicable).
- Do not allow children to climb or hang on the furniture.
- Do not open more than one drawer at a time.
- Do not place heavy items in the top drawers.
- Do not place heavy items on top of the furniture, unless the furniture has been designed for this purpose.
- Please note that only the anti tip strap is provided. You will need to provide wall plugs and screws applicable for your wall type.

Email : **service@grandtunnel.com**

EN

Safety Instructions / Warnings

Please read and follow all instructions carefully before installation and use.

WARNING:
Risk of electric shock – Do not open or disassemble electrical parts.

- **Rating:110-240V~,50/60Hz 1500W**
  USB Output:DC 5V/2A
- Do not use with damaged power cords or plugs.
- Keep power cables away from moving or sharp parts of the furniture.
- Do not use extension cords or power strips unless specifically approved for the load.
- This product is **not a toy**. Do not allow children to play with electrical components or moving parts.
- Children under 8 years old must be kept away from the furniture unless continuously supervised.
- Keep remote controls, control switches, and ports out of children's reach.
- Always **disconnect the product from power** before cleaning, maintenance, or relocation.
- Do not attempt to open, modify, or repair electrical components.
- **Repairs must be performed by qualified professionals only.**
- Do not insert any foreign objects into openings or mechanisms.
- Clean with a dry cloth or a slightly damp soft cloth. Do not use solvents.
- This product is intended **for indoor** use only in dry environments.
- Do not expose the furniture to moisture, liquids, or direct sunlight.
- * Ensure stability and clearance around any moving parts (e.g., lift mechanisms, recliners).
- Do not overload power outlets or USB ports beyond the specified ratings.
- **Always unplug the product when it is not in use.**

FCC Information:

CAUTION: Changes or modifications not expressly approved by the party responsible for compliance could void the user's authority to operate the equipment!

This device complies with Part 15 of the FCC Rules. Operation is subject to the following two conditions:

1) This product may cause harmful interference.

2) This product must accept any interference received, including interference that may cause undesired operation.

Email : **service@grandtunnel.com**

WARNING: Changes or modifications to this product not expressly approved by the party. responsible for compliance could void the user's authority to operate the product.

Note: This product has been tested and found to comply with the limits for a Class B digital device pursuant to Part 15 of the FCC Rules, These limits are designed to provide reasonable protection against harmful interference in a residential installation.

This product generates, uses and can radiate radio frequency energy, and if not installed and used in accordance with the instructions, may cause harmful interference to radio communications. However, there is no guarantee that interference will not occur in a particular installation. If this product does cause harmful interference to radio or television reception, which can be determined by turning the product off and on, the user is encouraged to try to correct the interference by one or more of the following measures.

- Reorient or relocate the receiving antenna.
- Increase the distance between the product and receiver.
- Connect the product to an outlet on a circuit different from that to which the receiver is connected.
- Consult the dealer or an experienced radio/TV technician for assistance.

Customer Service Guide

Thank you for choosing our product! We are committed to providing you with excellent service. If you find any missing parts, damaged packaging, or product damage after receiving all packages, please follow the steps below to quickly contact our customer service team. We will do our best to resolve your issue.

1. Missing Parts

Verify Parts:

1. Refer to the "Parts List" in the manual to verify the name, specifications, and quantity of the missing parts.
2. Take a clear photo of the parts list and mark the missing parts with detailed information, e.g., "Missing 5 pieces of M6×30mm screws."

Email : **service@grandtunnel.com**

Contact Us:

By Email:
Send an email to **service@grandtunnel.com**, with the subject line “Missing Parts Issue.” Include the following in the email:

- A description of the missing parts and a photo of the parts list.
- Order details (order number, purchase platform, purchase date).

2. Product or Packaging Damage

If it affects normal use:

Steps:
1. Take clear photos or videos showing the damaged parts and the extent of the damage (multi-angle shots are recommended).
2. Email the photos/videos along with order details to **service@grandtunnel.com**, with the subject line “Product Damage Issue.”

Resolution:
After verification, we will arrange for a replacement part, product exchange, or refund as quickly as possible.

If it does not affect normal use:

Steps:
1. Contact our customer service team (by email: **service@grandtunnel.com**).
2. Provide a description of the damage and include relevant photos or videos.

Resolution:
We will provide repair guidance or an appropriate compensation plan based on the specific situation.

Contact Us:

Customer Service Email: **service@grandtunnel.com**

Helpful Tips

To process your issue efficiently, please prepare the following information:

- Order details (order number, purchase platform, purchase date).
- Clear photos or videos.
- We are committed to providing quick and professional solutions, no matter the size of the issue, to ensure your satisfaction.

Thank you for your trust and support!
We hope you enjoy using our product!

Parts List - Panels

Please check you have all the panels listed below.

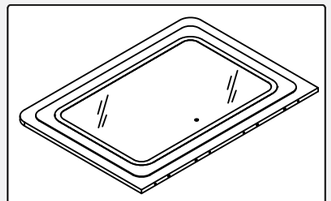
1 600x830x15mm x1

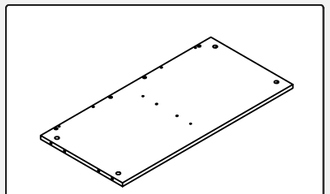
2 800x385x15mm x1

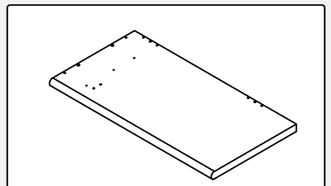
3 760x400x31mm x1

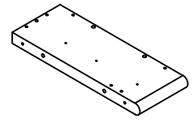
4 150x400x31mm x1

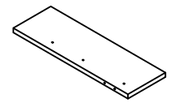
5 359x117.5x12mm x1

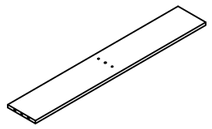
6 800x130x12mm x1

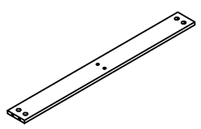
7 800x80x12mm x1

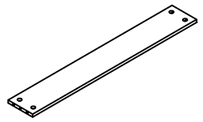
8 770x115X12mm x1

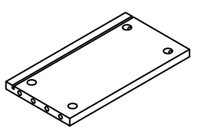
10 281x150x15mm x1

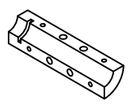
11 150x42.4x20.1mm x2

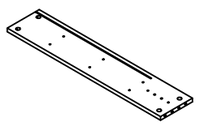
12 720x150x15mm x1

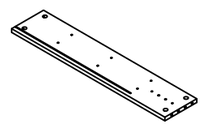
13 720x150x15mm x1

EN

Parts List - Panels

Please check you have all the panels listed below.

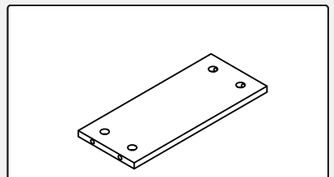

14 309x130x12mm **x2**

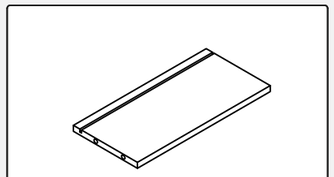

15 309x149x12mm **x1**

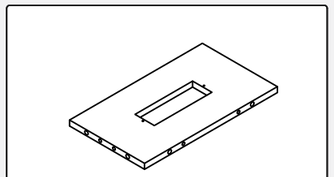

16 309x174.5x12mm **x1**

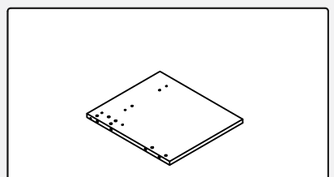

17 340x385x15mm **x1**

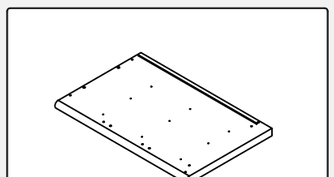

18 610x400x31mm **x1**

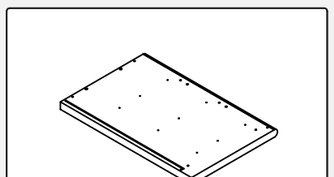

19 610x400x31mm **x1**

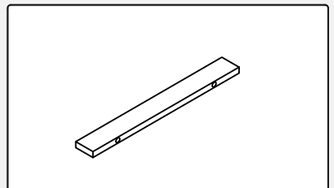

20 340x40x12mm **x1**

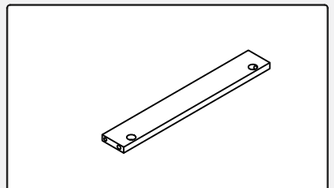

21 340x50X12mm **x2**

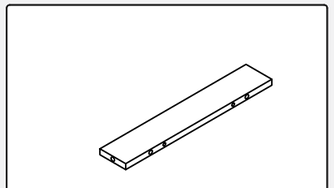

22 340x60x12mm **x1**

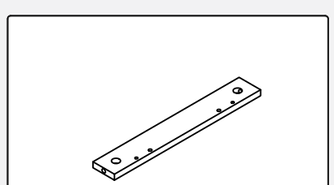

23 340x50x12mm **x1**

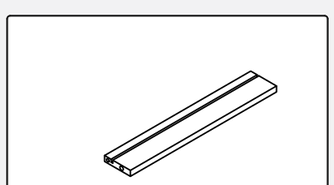

24 340x60x12mm **x1**

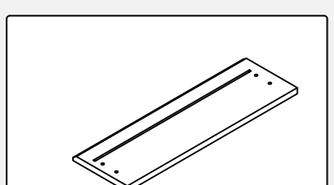

25 395.5x125.5x12mm **x1**

Email : service@grandtunnel.com

EN

Parts List - Panels

Please check you have all the panels listed below.

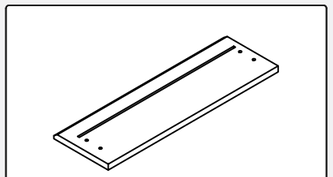

26 395.5x125.5x12mm **x1**

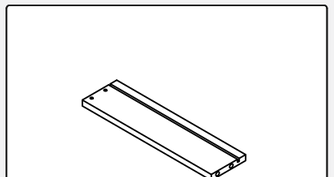

27 300x80x12mm **x2**

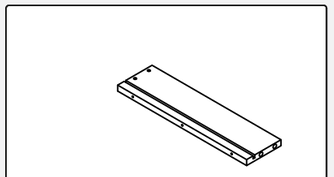

28 300x80x12mm **x2**

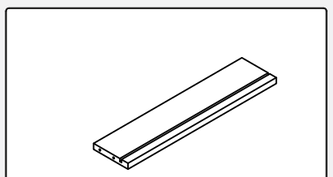

29 345x80x12mm **x2**

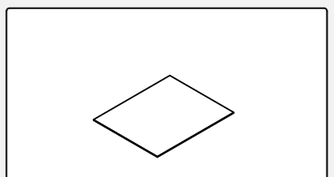

30 355x297x3mm **x2**

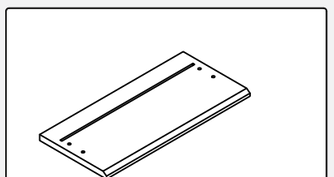

31 334x155.5x12mm **x3**

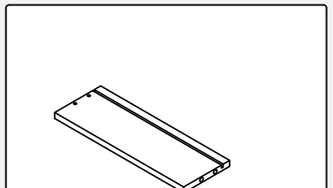

32 300x107x12mm **x3**

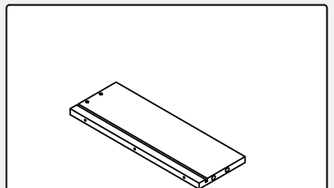

33 300X107X12mm **x3**

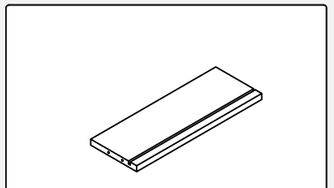

34 291x107X12mm **x3**

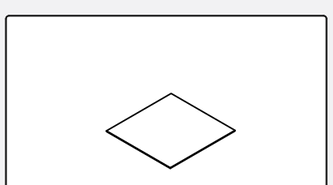

35 301x297x3mm **x3**

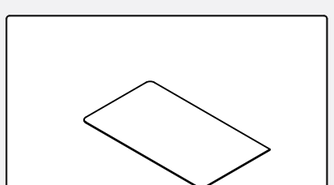

36 557.5x319x3mm **x1**

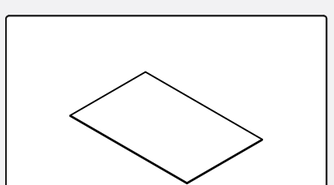

37 543x350x3mm **x1**

Email : service@grandtunnel.com

Parts List - Fittings

Please check you have all the fittings listed below.

Note: The quantities below are the correct amount to complete the assembly. In some cases more fittings may be supplied are required.

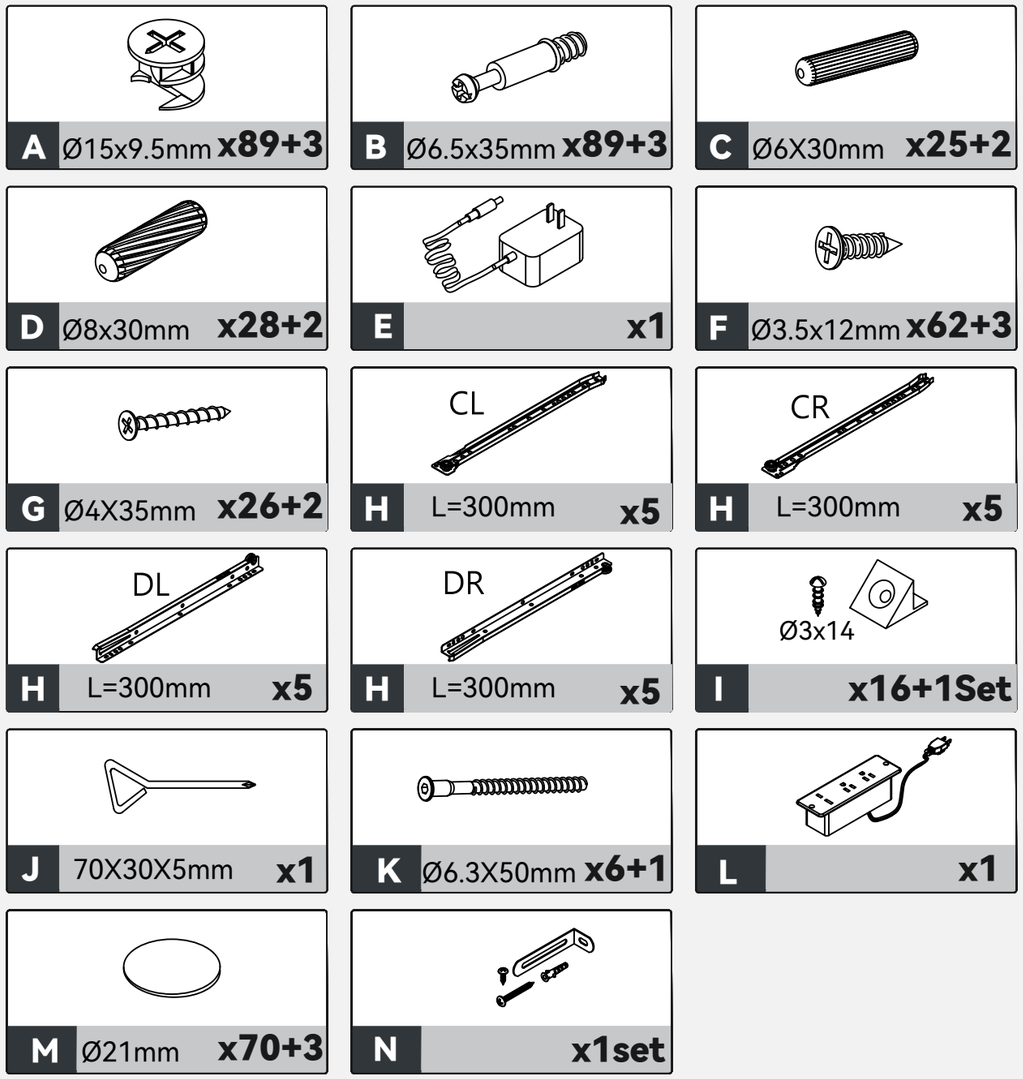

Email : service@grandtunnel.com

Parts List - Fittings

Please check you have all the fittings listed below.

Note: The quantities below are the correct amount to complete the assembly. In some cases more fittings may be supplied are required.

Cam Lock Fastening System

Insert the cam bolt into the hole first, then insert the cam lock and lock it.

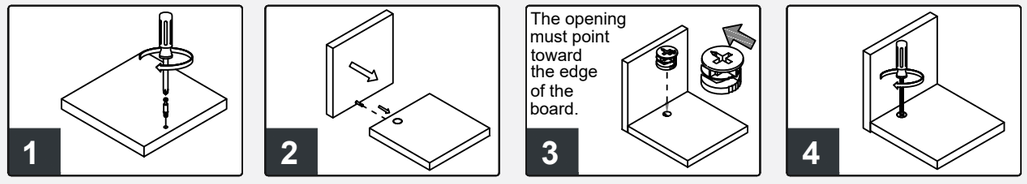

Email : service@grandtunnel.com

EN

Assembly Instructions

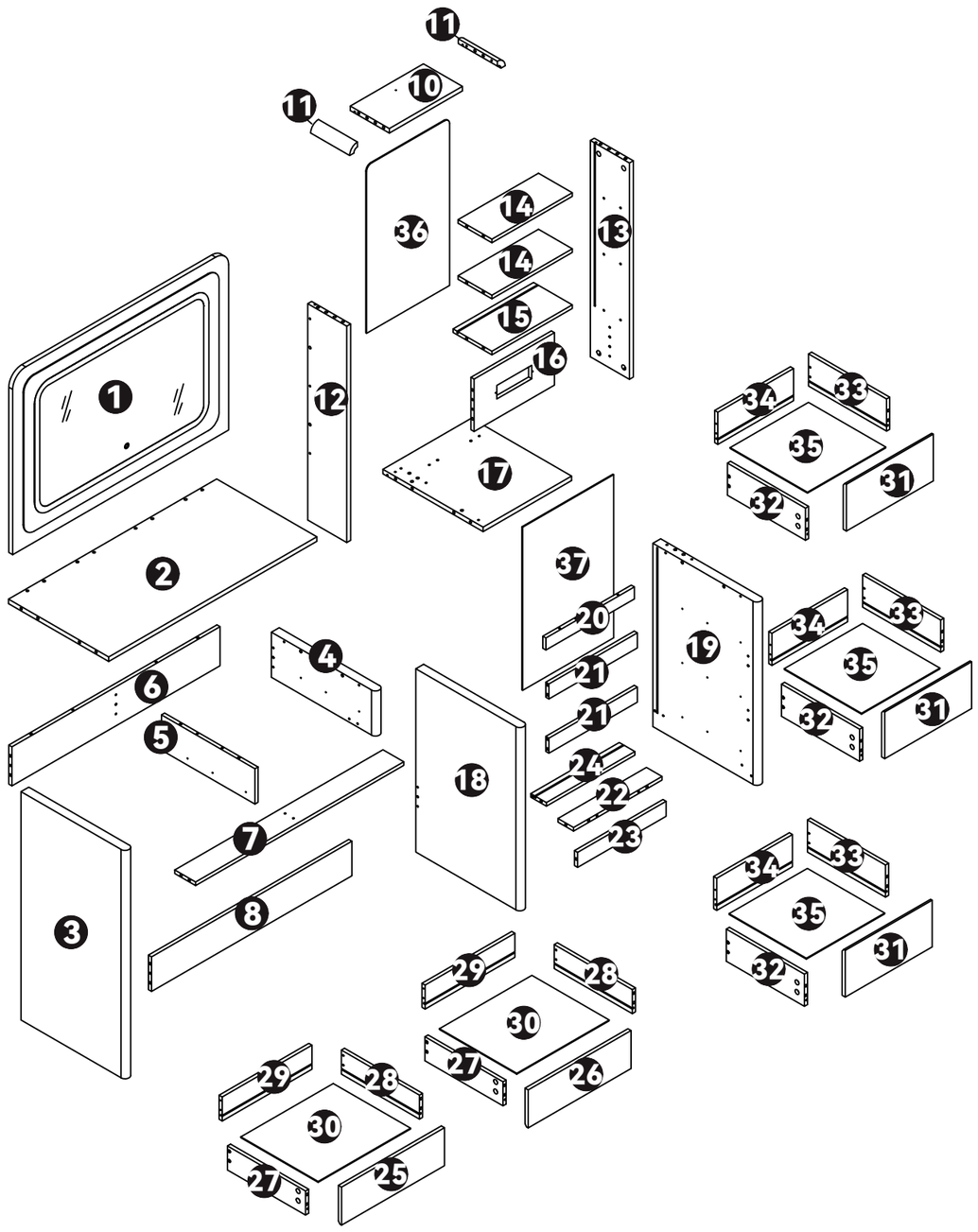

Email : service@grandtunnel.com

Step 1

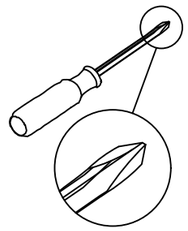

D	X4
Ø8x30mm	

K	X4
Ø6.3x50mm	

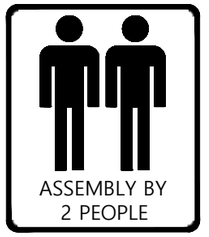

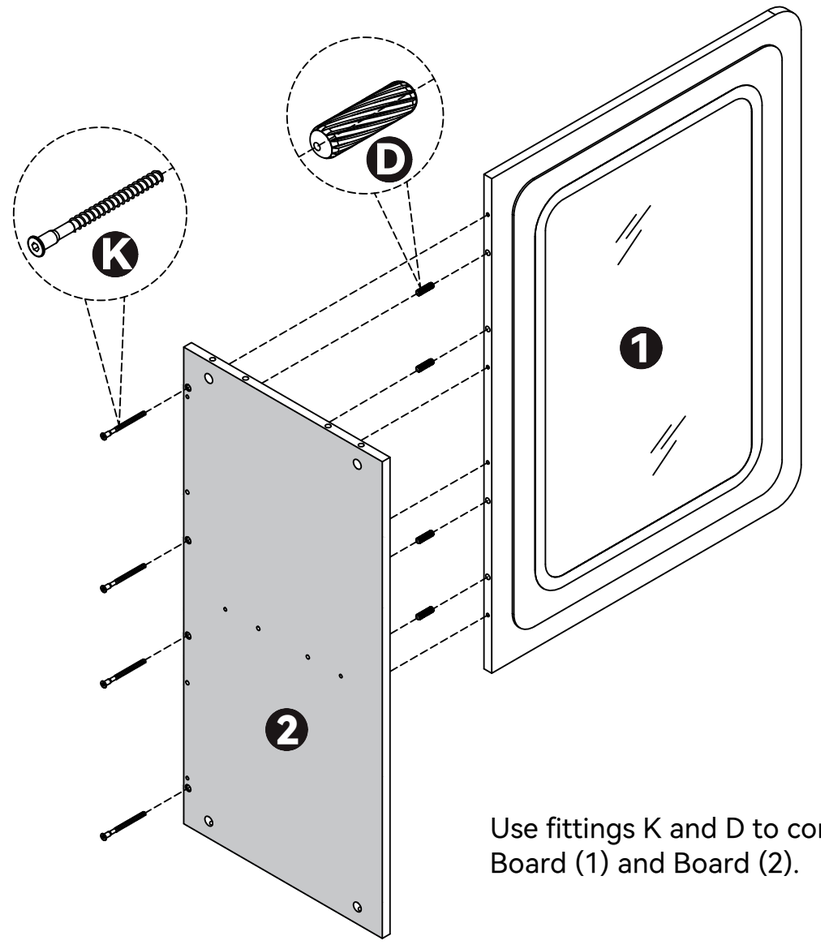

Use fittings K and D to connect Board (1) and Board (2).

Email : service@grandtunnel.com

EN

Step 2

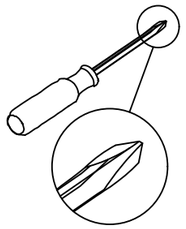

F	X6
	
Ø3.5X12mm	

H	X1
CL 	
L=300mm	

H	X1
CR 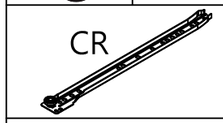	
L=300mm	

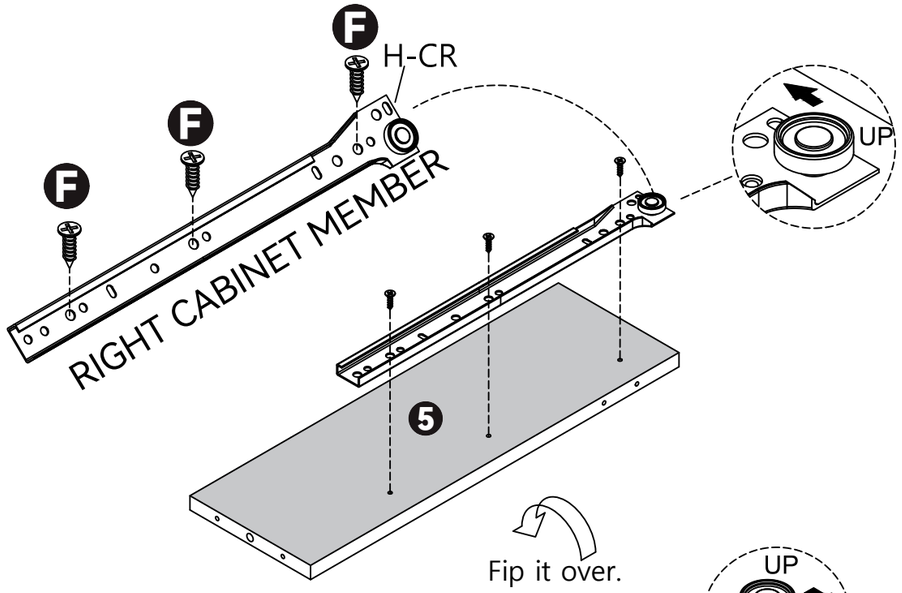

Fip it over.

Use fitting F to install fitting H on the front and back sides of Board (5) respectively.

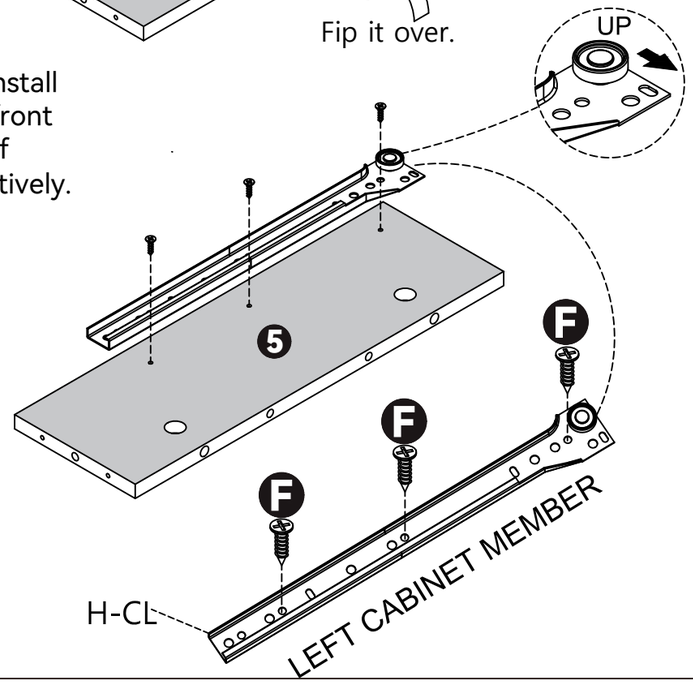

Email : service@grandtunnel.com

Step 3

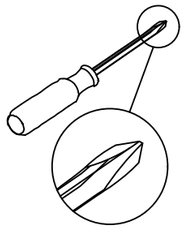

G	X2
	
Ø4X35mm	

C	X1
	
Ø6X30mm	

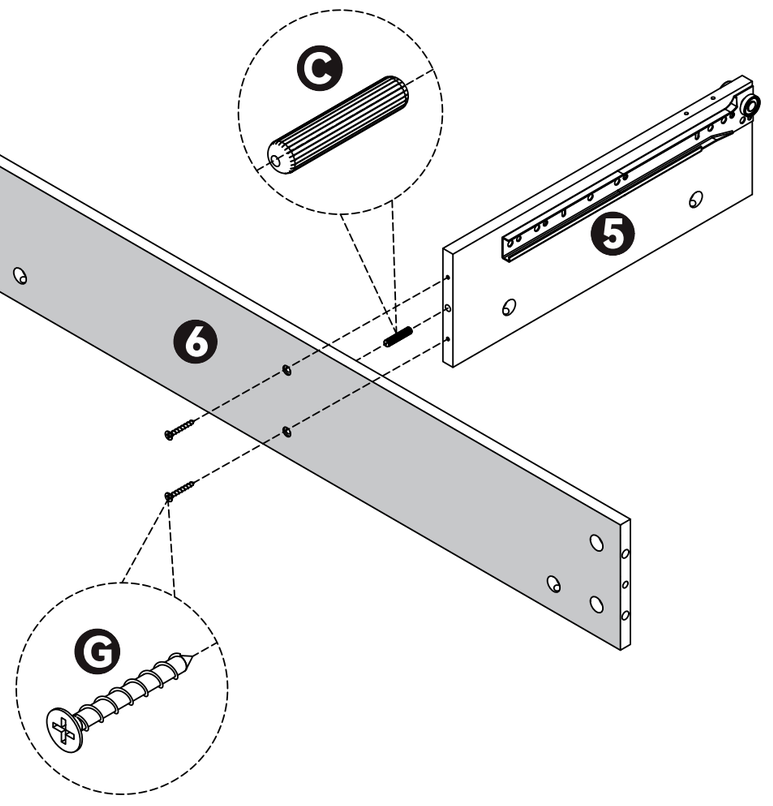

Use fittings C and G to connect Board (5) and Board (6).

Email : service@grandtunnel.com

EN

Step 4

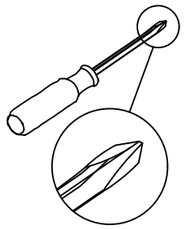

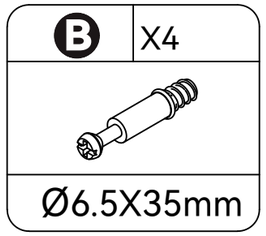

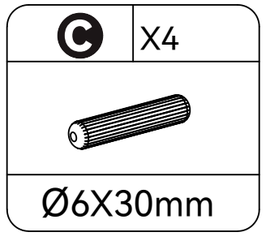

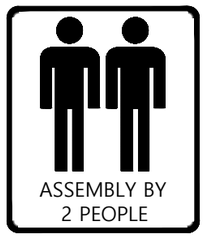

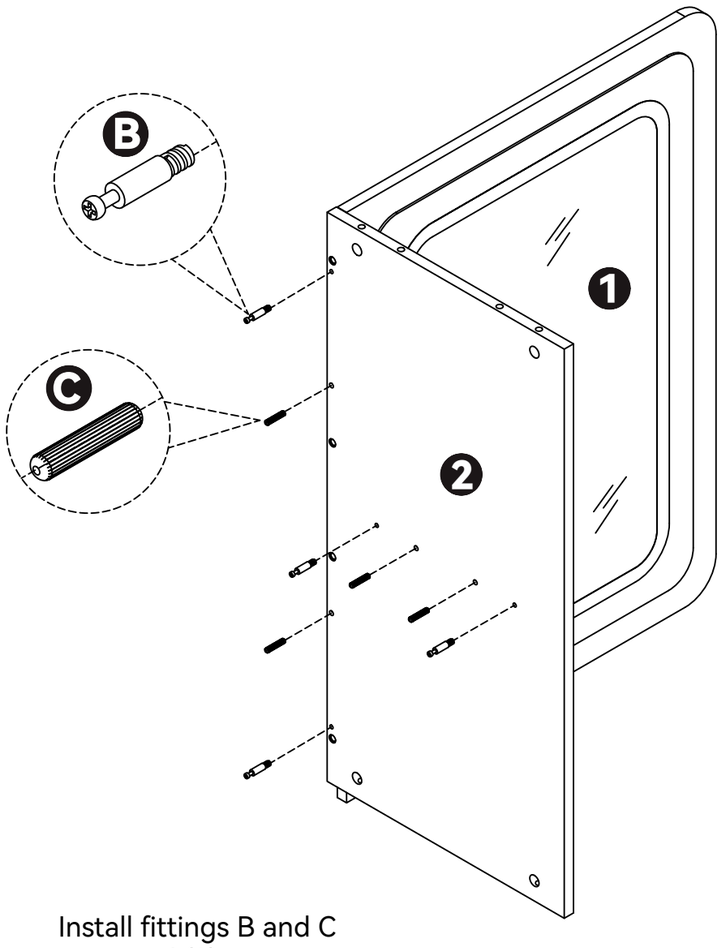

Install fittings B and C on Board (2).

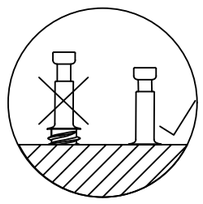

Email : service@grandtunnel.com

Step 5

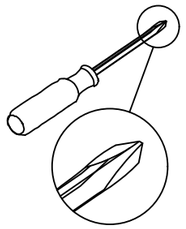

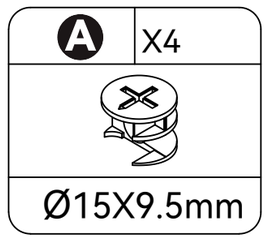



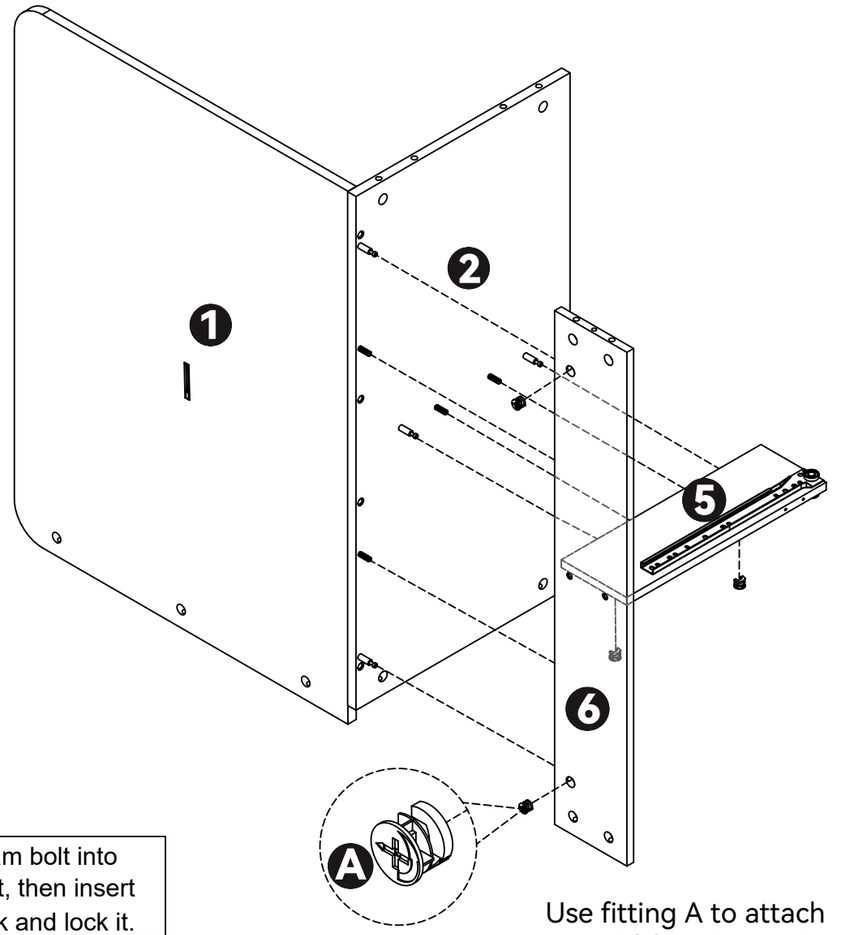

Use fitting A to attach Board (5) and Board (6) to Board (2).

Insert the cam bolt into the hole first, then insert the cam lock and lock it.

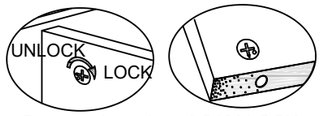

Proper orientation of CAM LOCK

Email : service@grandtunnel.com

Step 6

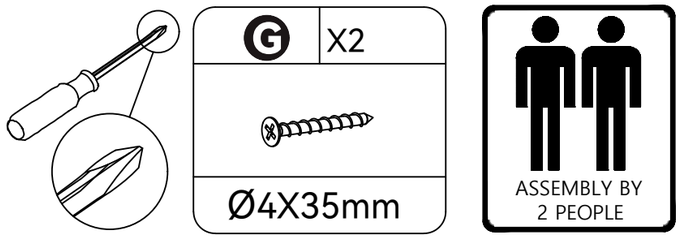

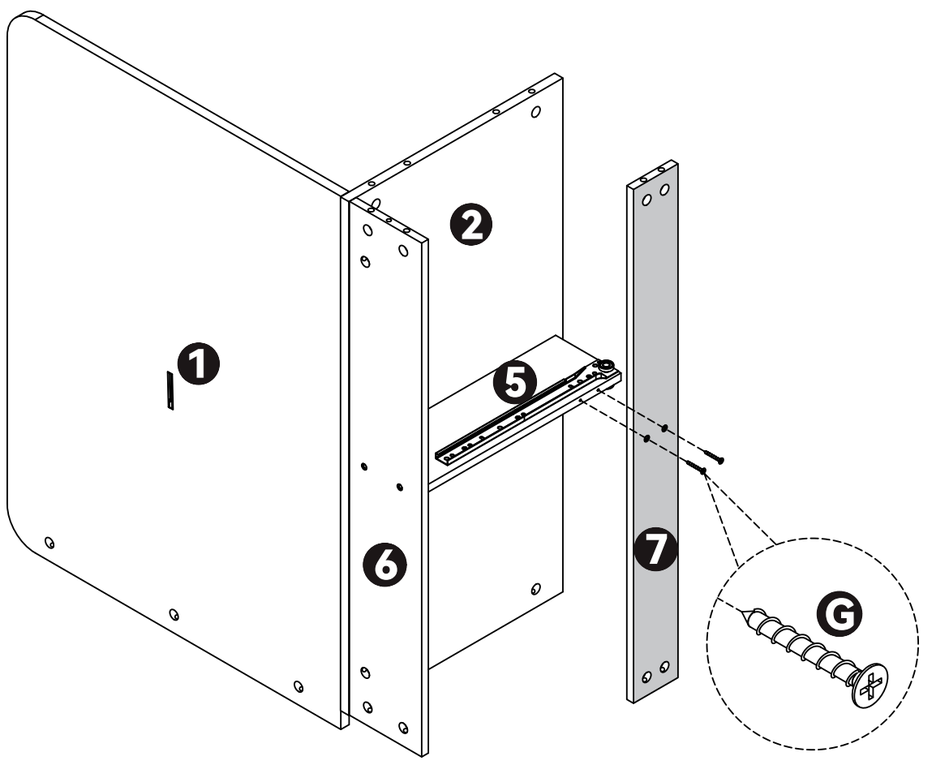

Use fitting G to connect Board (7) to Board (5).

Step 7

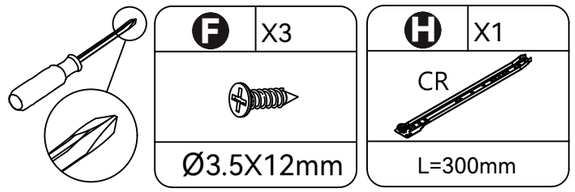

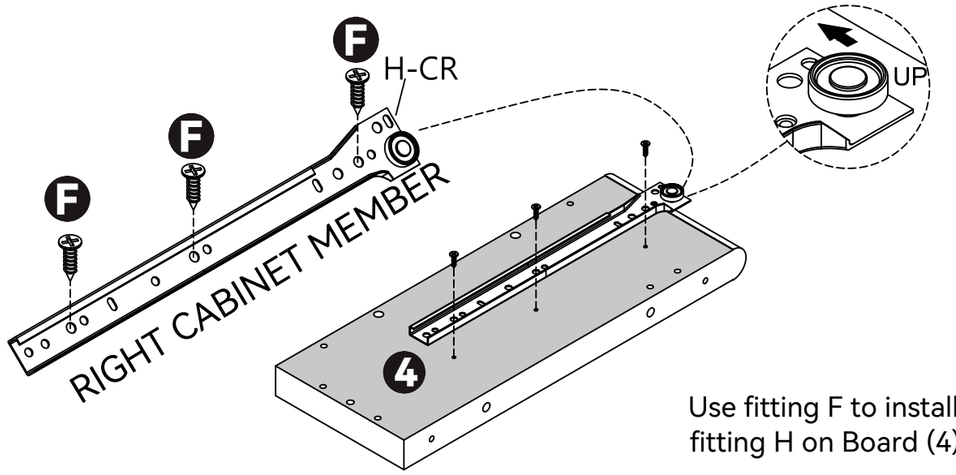

Use fitting F to install fitting H on Board (4).

Step 8

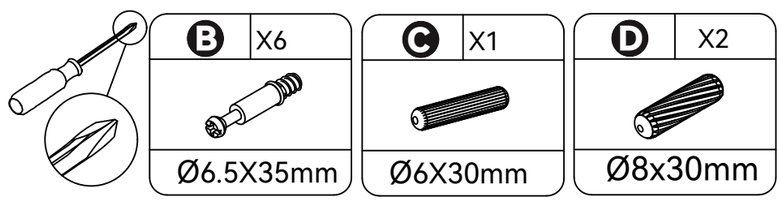

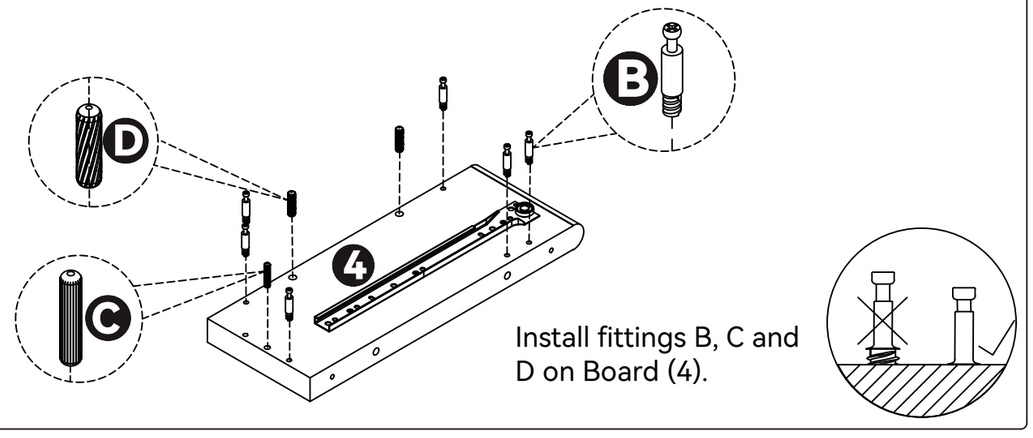

Install fittings B, C and D on Board (4).

Step 9

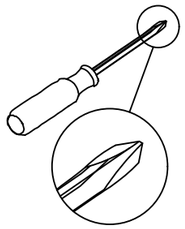

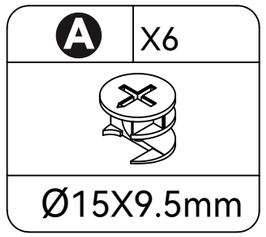

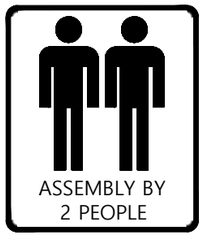

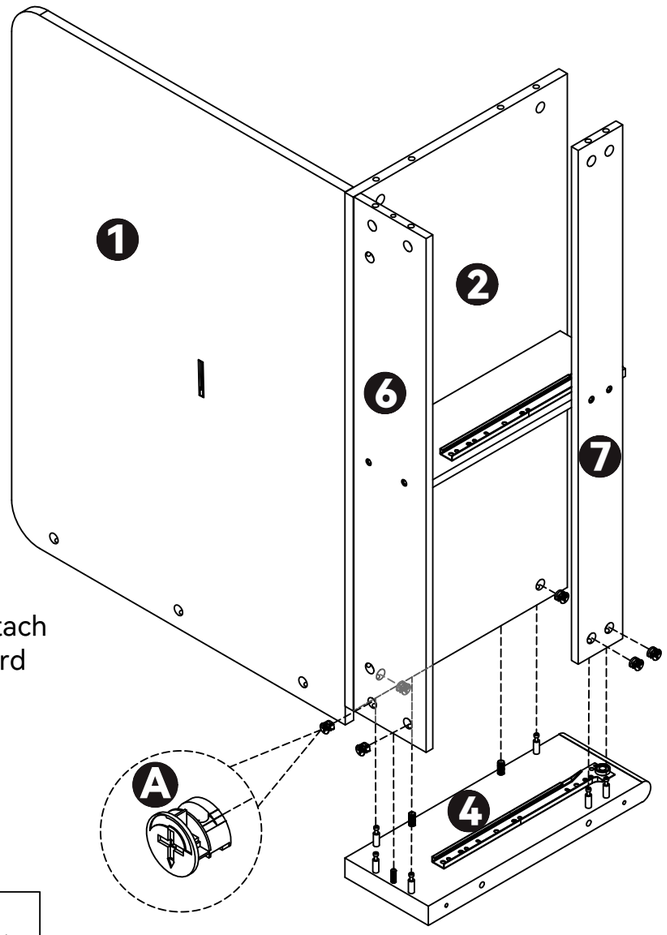

Use fitting A to attach Board (6) and Board (7) to Board (4).

Insert the cam bolt into the hole first, then insert the cam lock and lock it.

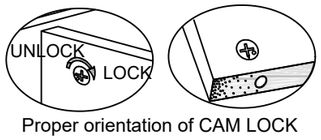

Proper orientation of CAM LOCK

Email : service@grandtunnel.com

Step 10

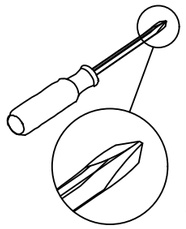

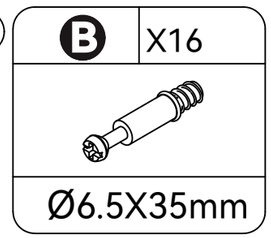

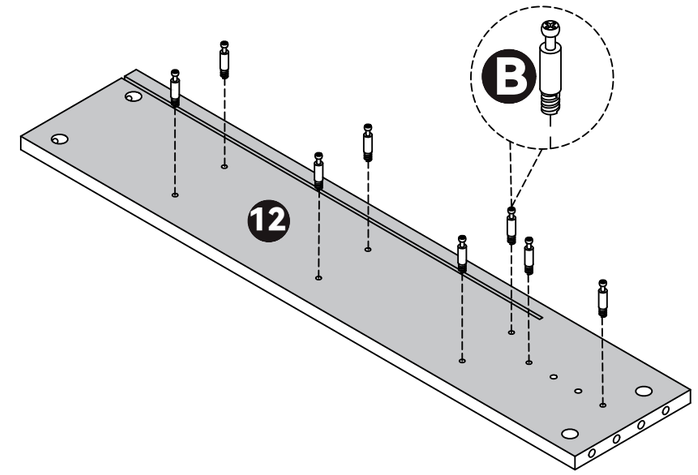

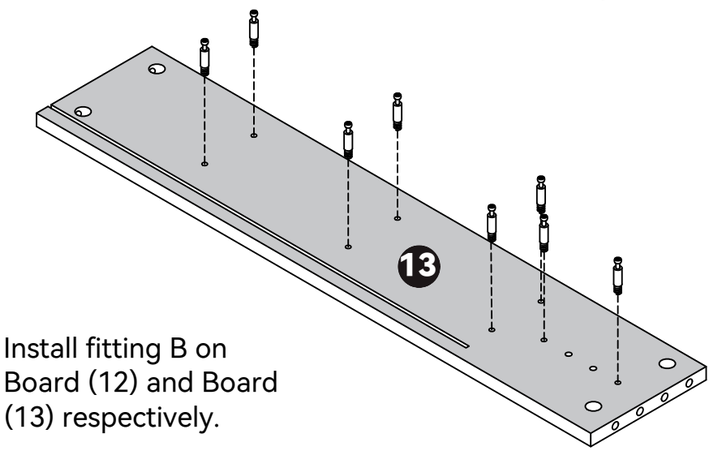

Install fitting B on Board (12) and Board (13) respectively.

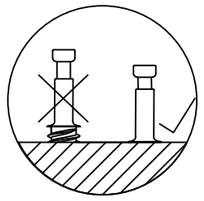

Email : service@grandtunnel.com

EN

Step 11

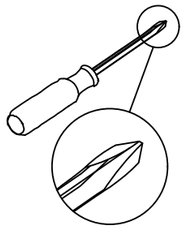

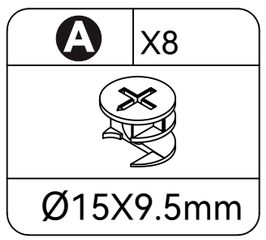

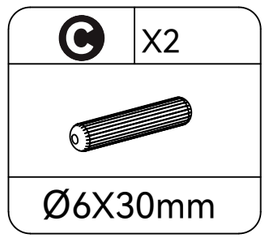

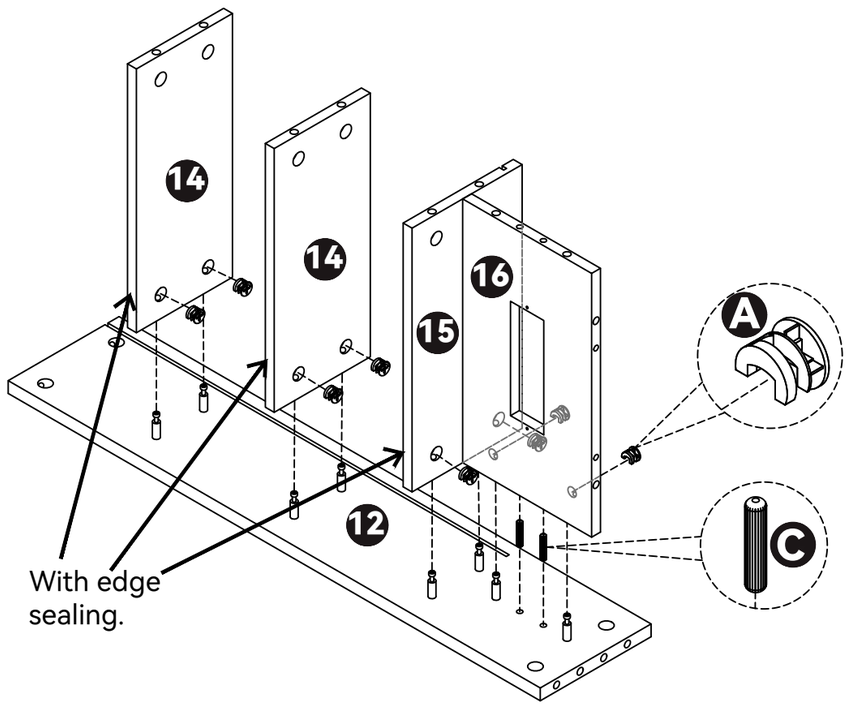

Use fittings A and C to attach Board (14), Board (15) and Board (16) to Board (12) respectively.

Insert the cam bolt into the hole first, then insert the cam lock and lock it.

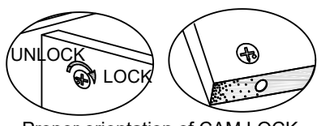

Proper orientation of CAM LOCK

Email : service@grandtunnel.com

Step 12

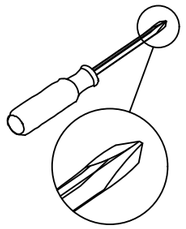

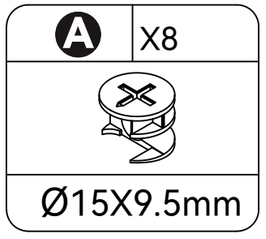

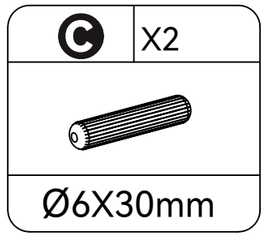

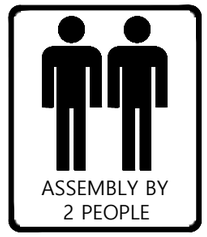

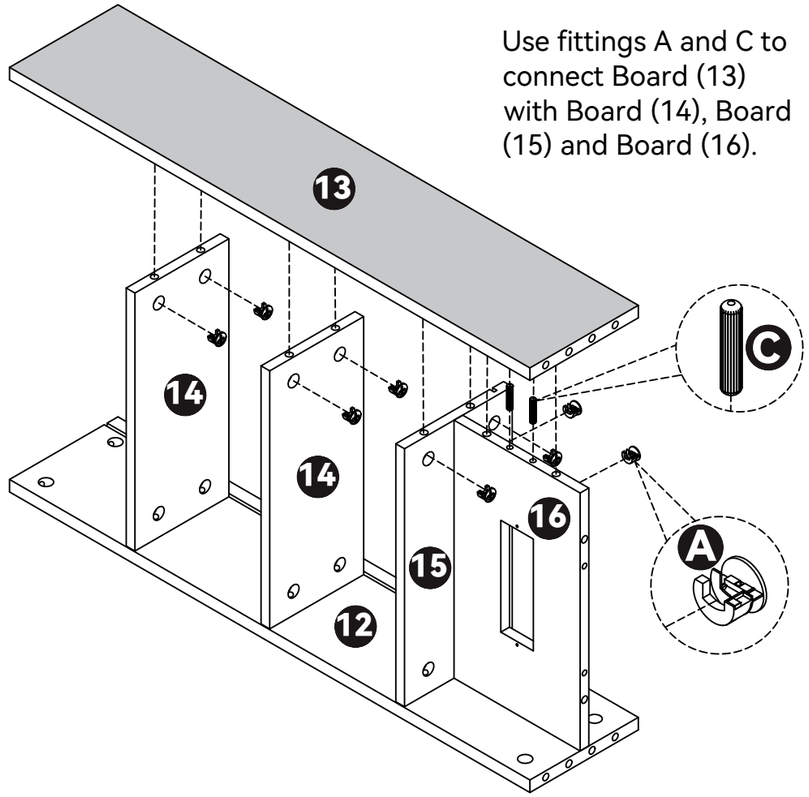

Use fittings A and C to connect Board (13) with Board (14), Board (15) and Board (16).

Insert the cam bolt into the hole first, then insert the cam lock and lock it.

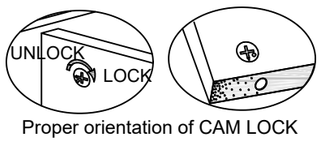

Proper orientation of CAM LOCK



Fip it over.

Email : service@grandtunnel.com

EN

Step 13

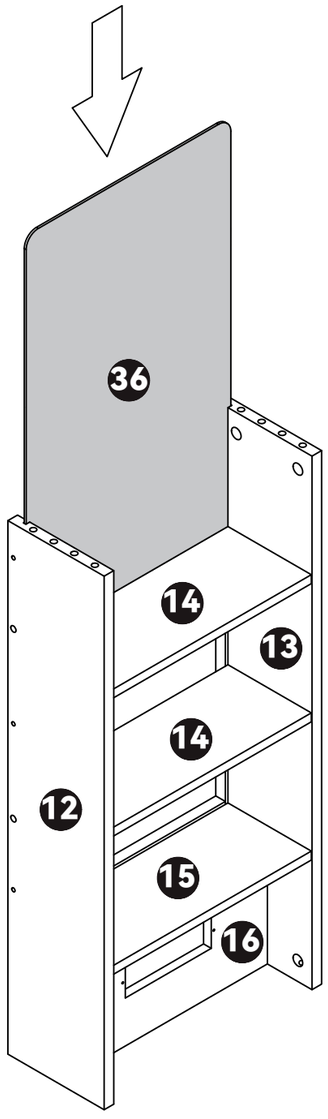

Insert Board (36) into the grooves of Board (12), Board (13) and Board (15).

Email : service@grandtunnel.com

Step 14

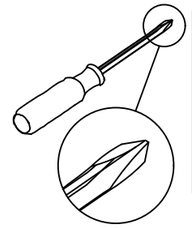

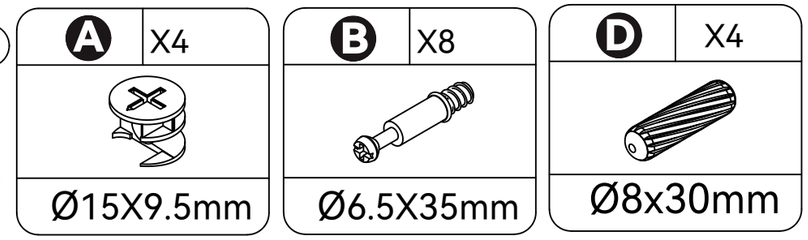

Install fitting B on Board (11).

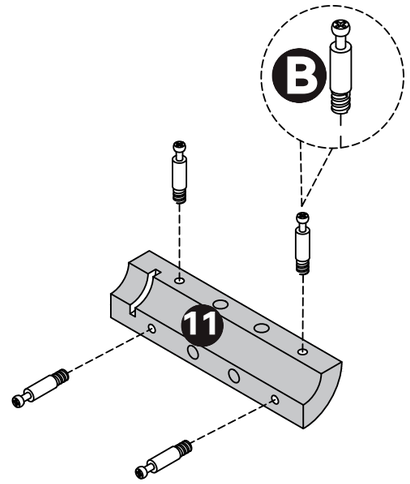

X2

Use fittings A and D to connect Board (11) to Board (10).

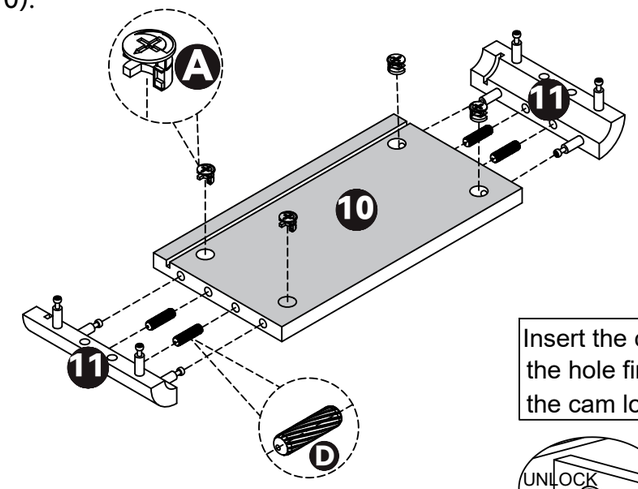

Insert the cam bolt into the hole first, then insert the cam lock and lock it.

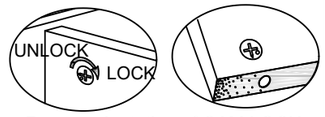

Proper orientation of CAM LOCK

Email : service@grandtunnel.com

Step 15

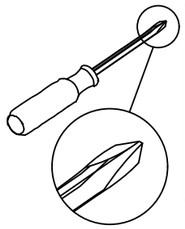

A	X4



Ø15X9.5mm

D	X4

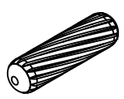

Ø8x30mm

Use fittings A and D to connect Board (11) to Board (12) and Board (13).

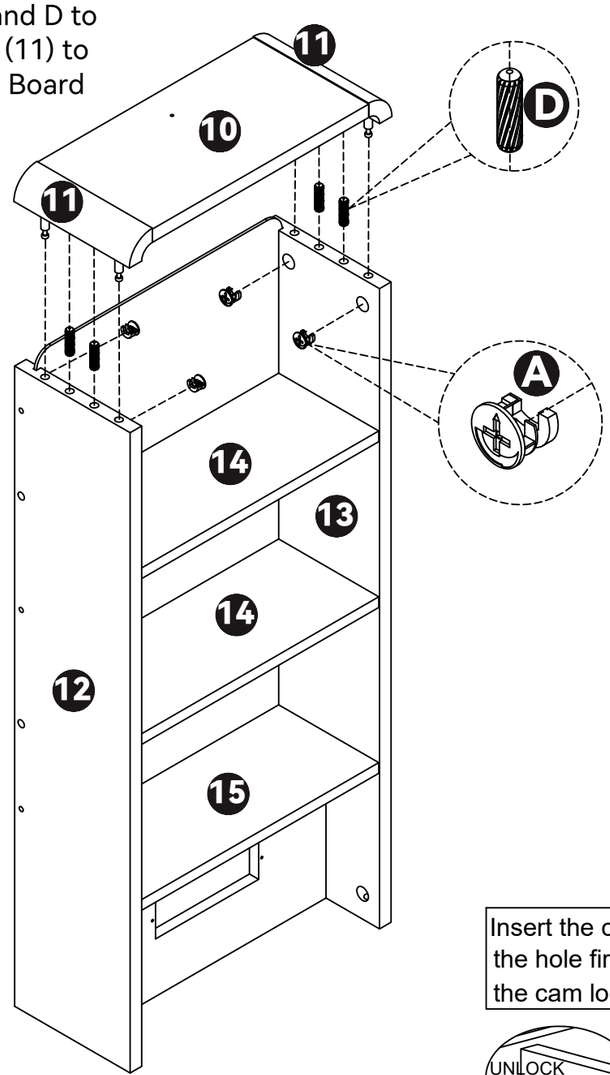

Insert the cam bolt into the hole first, then insert the cam lock and lock it.

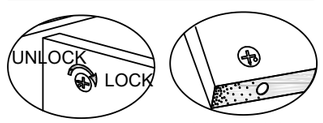

Proper orientation of CAM LOCK

Email : service@grandtunnel.com

Step 16

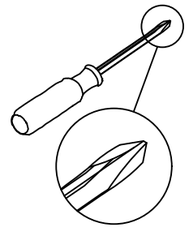

B	X3

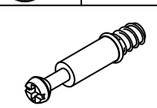

Ø6.5X35mm

Install fitting B on Board (12).

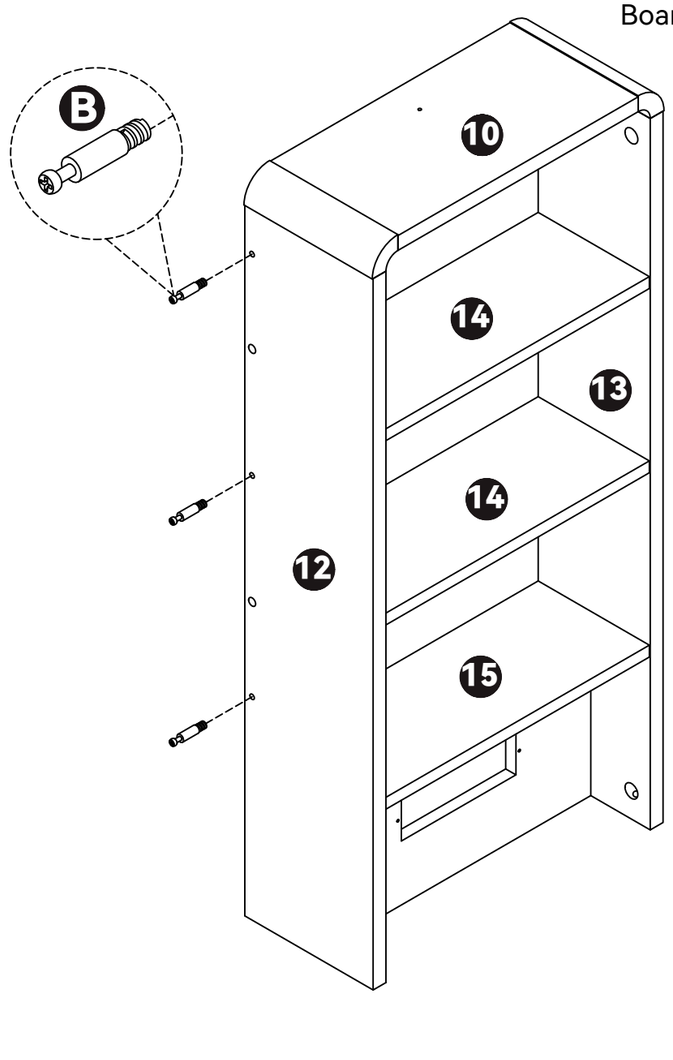

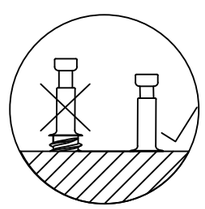

Email : service@grandtunnel.com

EN

Step 17

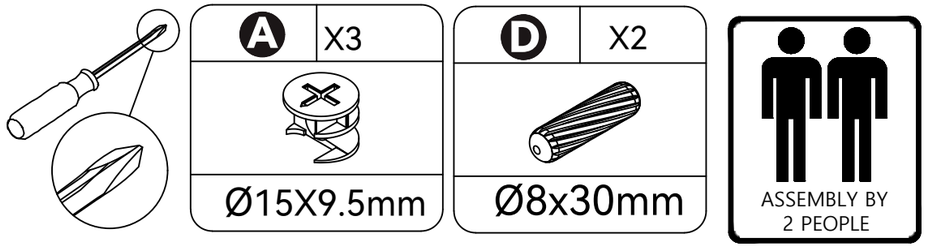

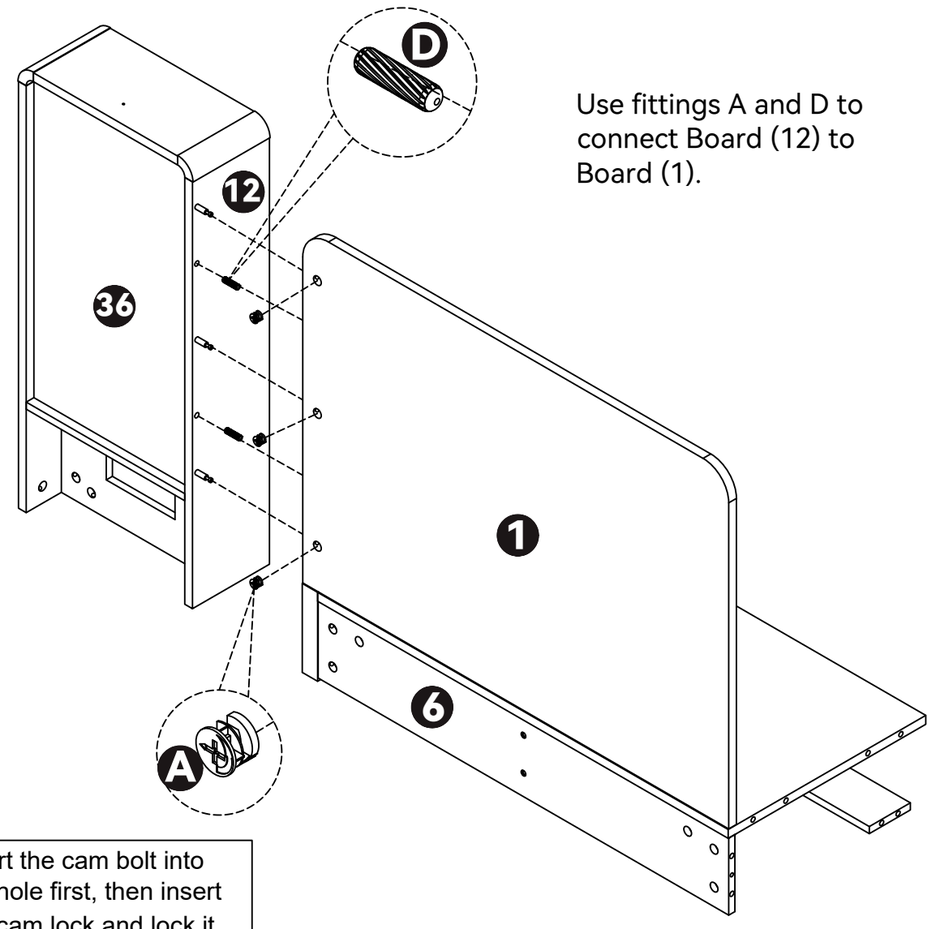

Use fittings A and D to connect Board (12) to Board (1).

Insert the cam bolt into the hole first, then insert the cam lock and lock it.

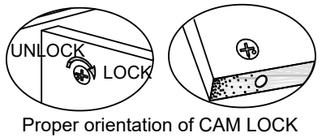

Proper orientation of CAM LOCK

Email : service@grandtunnel.com

Step 18

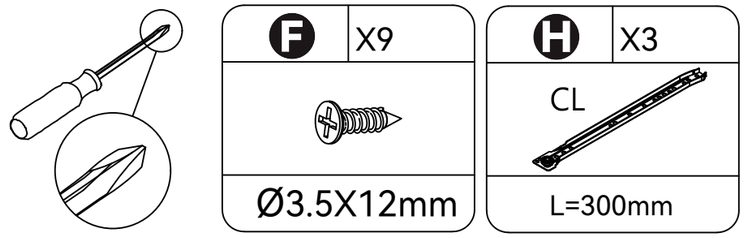

Use fitting F to install fitting H on Board (18).

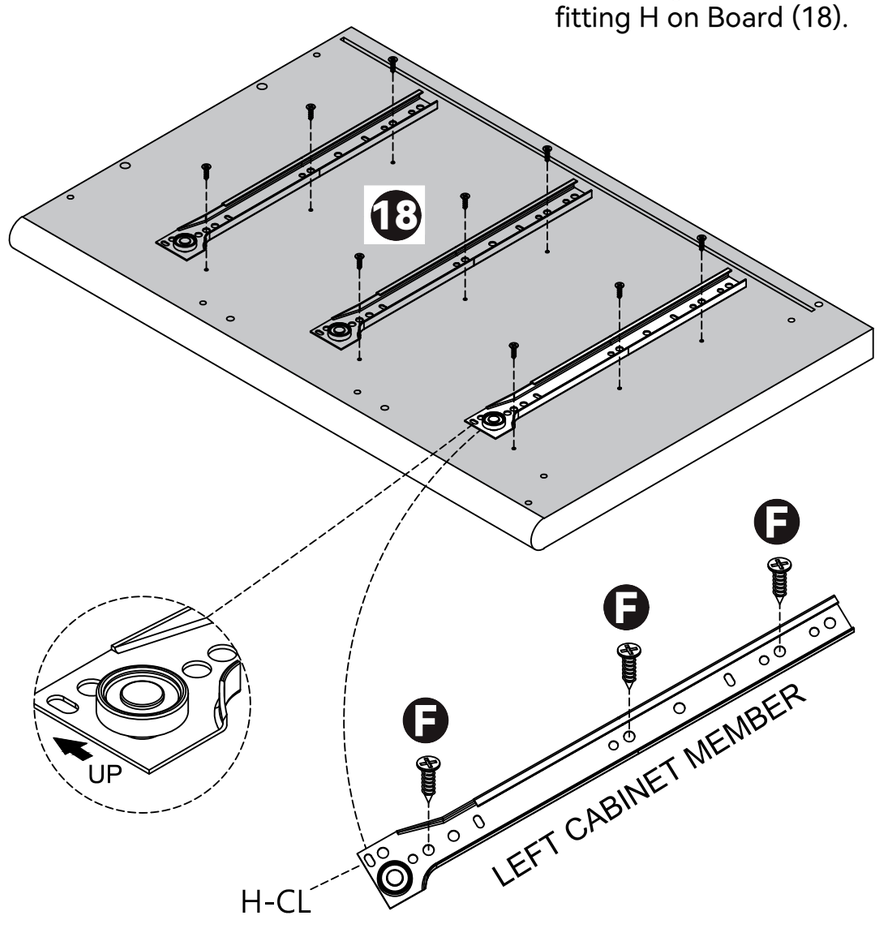

Email : service@grandtunnel.com

EN

Step 19

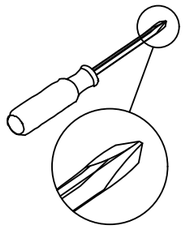

F	X9
	
Ø3.5X12mm	

H	X3
CR 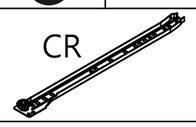	
L=300mm	

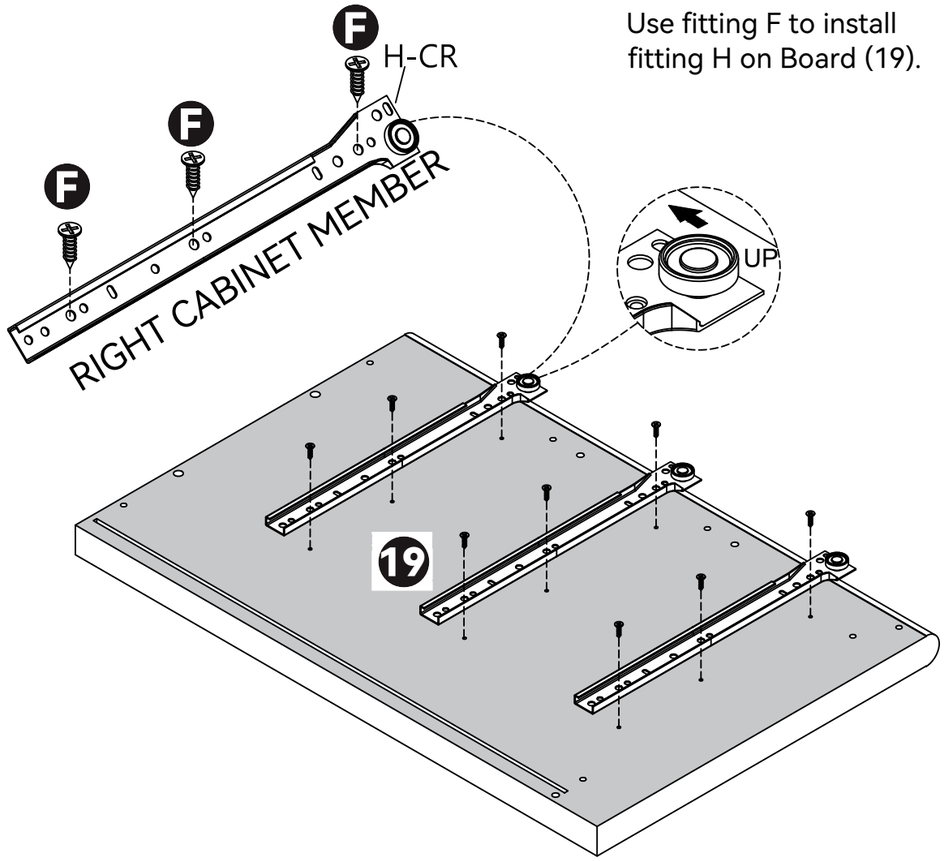

Use fitting F to install fitting H on Board (19).

Email : service@grandtunnel.com

Step 20

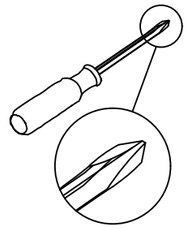

B	X14
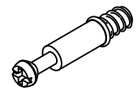	
Ø6.5X35mm	

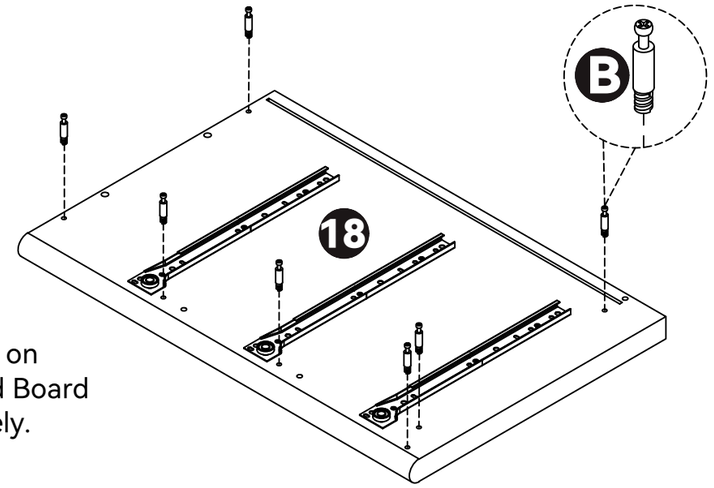

Install fitting B on Board (18) and Board (19) respectively.

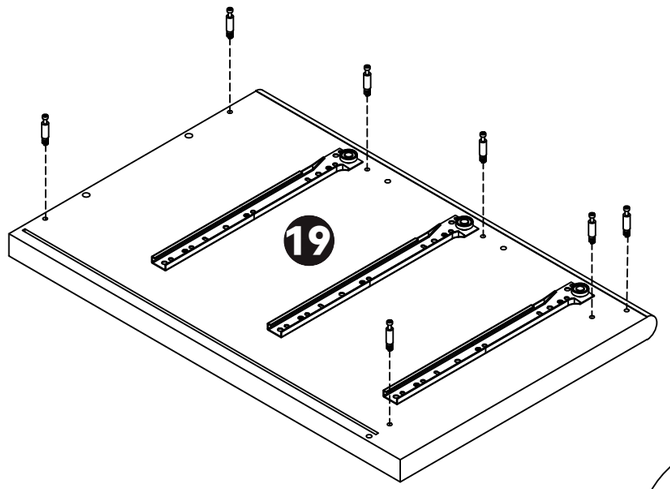

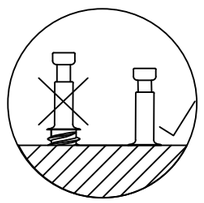

EN

Email : service@grandtunnel.com

EN

Step 21

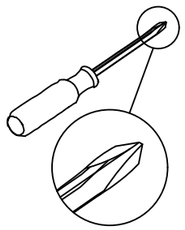

A	X2	B	X2	C	X2
		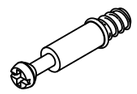			
Ø15X9.5mm		Ø6.5X35mm		Ø6X30mm	

Install fittings B and C on Board (23).

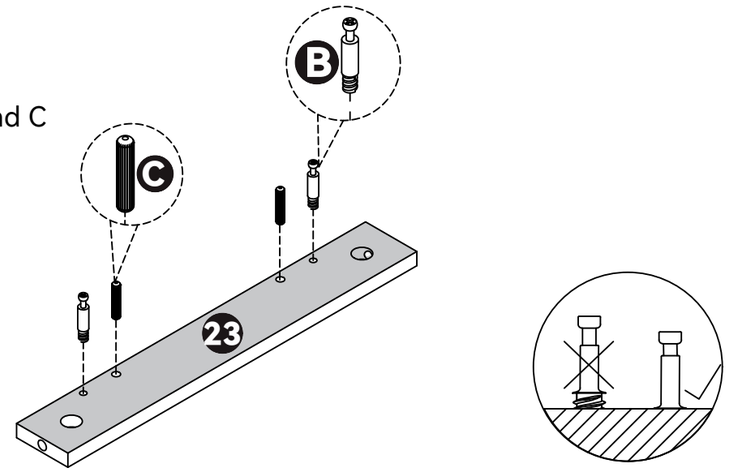

Use fitting A to connect Board (22) to Board (23).

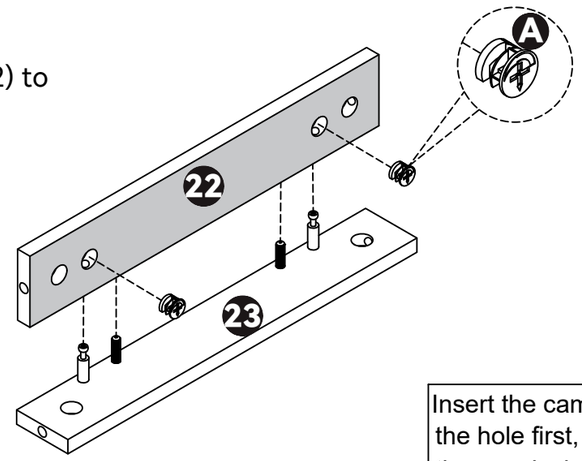

Insert the cam bolt into the hole first, then insert the cam lock and lock it.

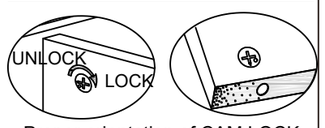

Proper orientation of CAM LOCK

Email : service@grandtunnel.com

Step 22

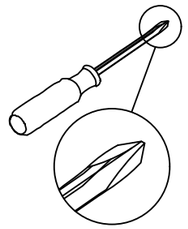

A	X7	C	X3	D	X2
					
Ø15X9.5mm		Ø6X30mm		Ø8x30mm	

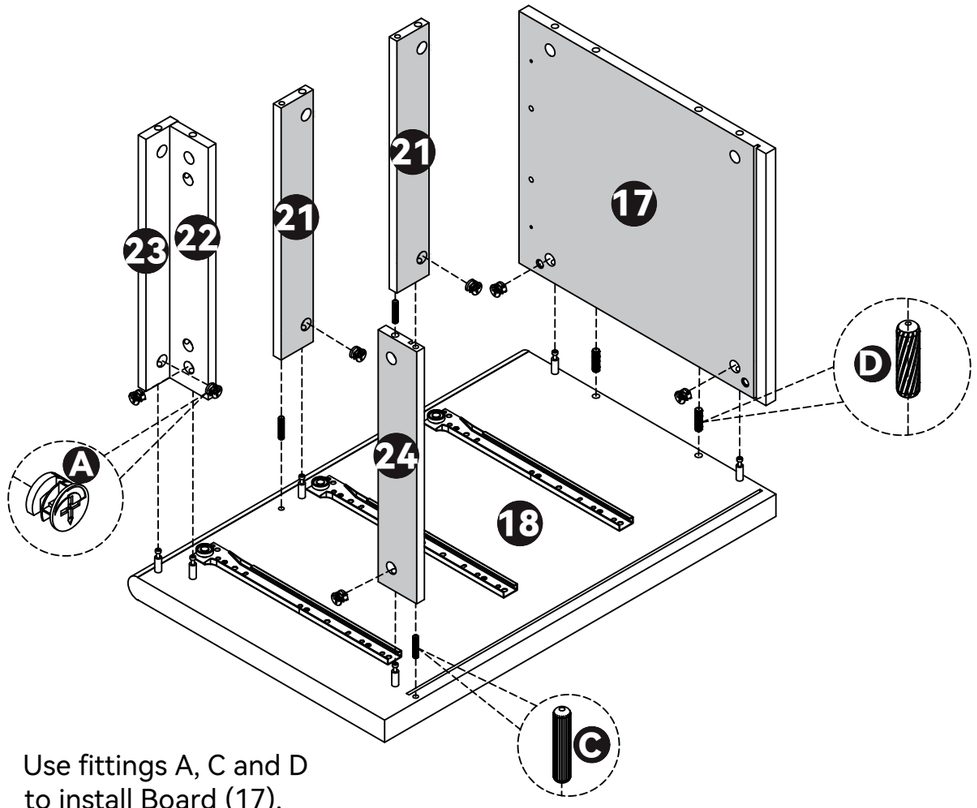

Use fittings A, C and D to install Board (17), Board (21), Board (22), Board (23) and Board (24) on Board (18) respectively.

Insert the cam bolt into the hole first, then insert the cam lock and lock it.

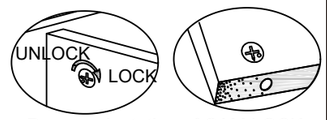

Proper orientation of CAM LOCK

Email : service@grandtunnel.com

Step 23

Insert Board (37) into the grooves of Board (17), Board (18) and Board (24).

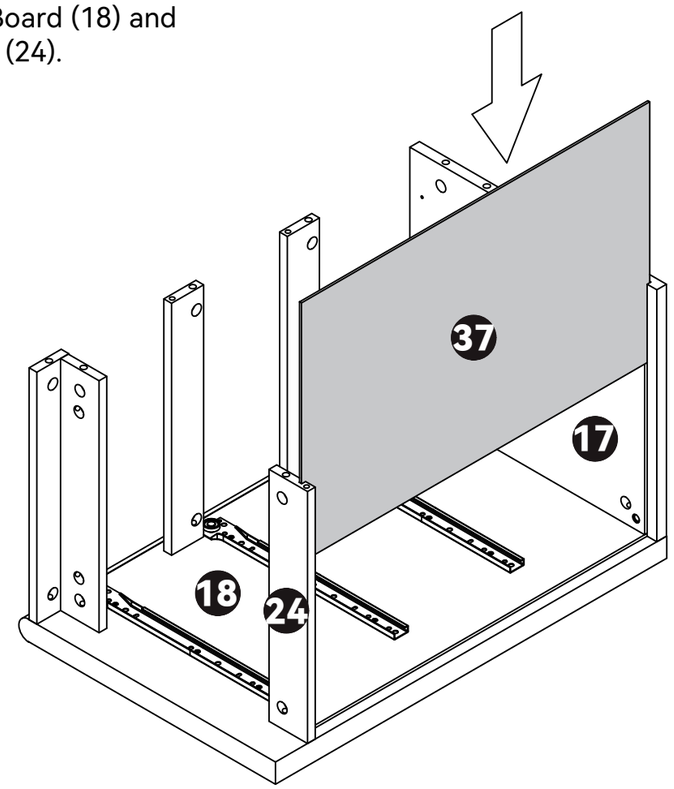

Step 24

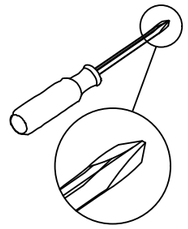

A	X7	C	X3	D	X2
					
Ø15X9.5mm		Ø6X30mm		Ø8x30mm	

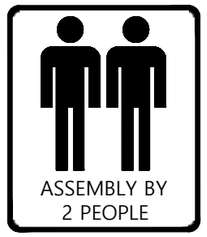

Use fittings A, C and D to connect Board (19) with Board (17), Board (21), Board (22), Board (23) and Board (24).

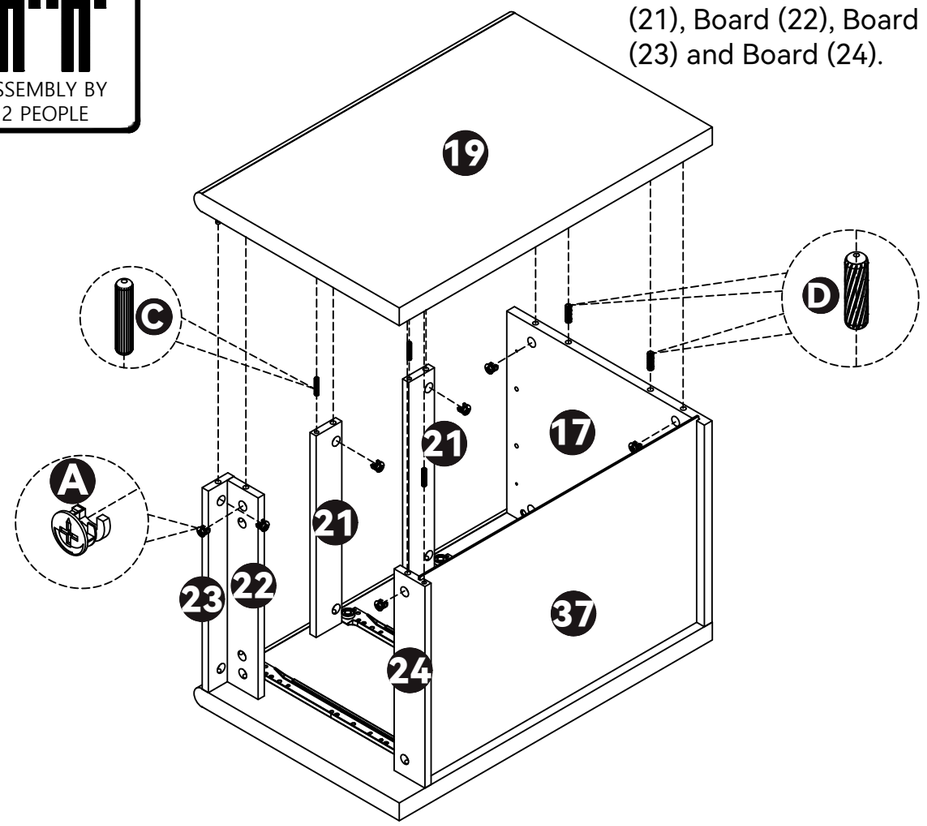



Fip it over.

Insert the cam bolt into the hole first, then insert the cam lock and lock it.

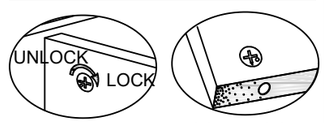

Proper orientation of CAM LOCK

Step 25

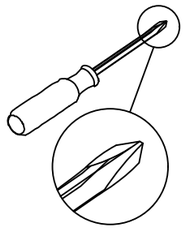

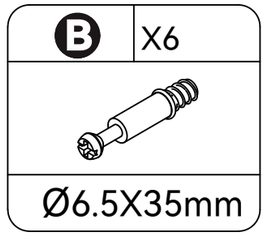

Install fitting B on Board (17) and Board (19).

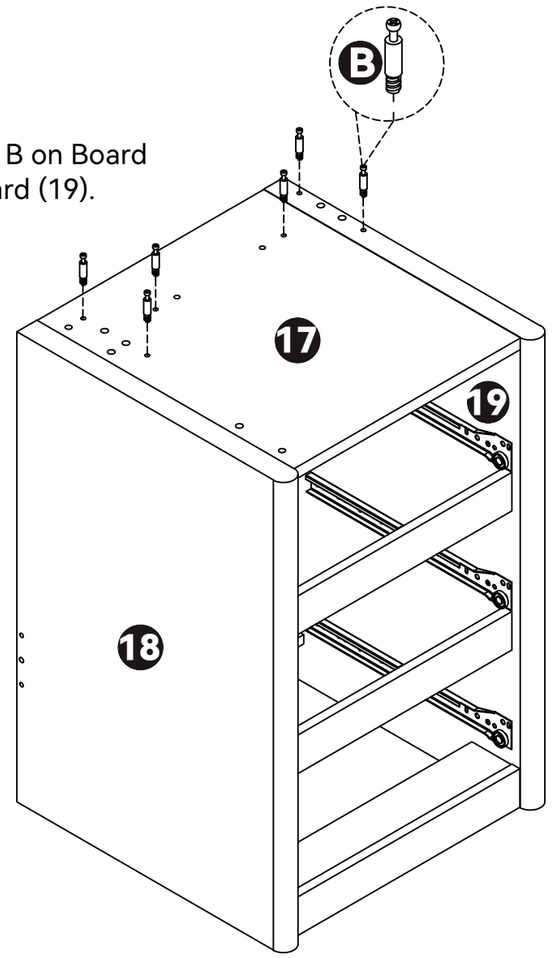

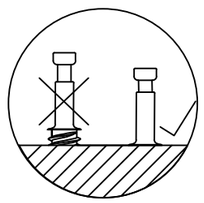

Email : service@grandtunnel.com

Step 26

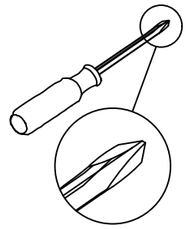

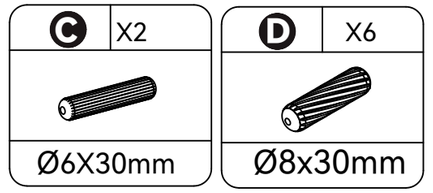

Install fittings C and D on Board (4), Board (12), Board (13) and Board (16) respectively.

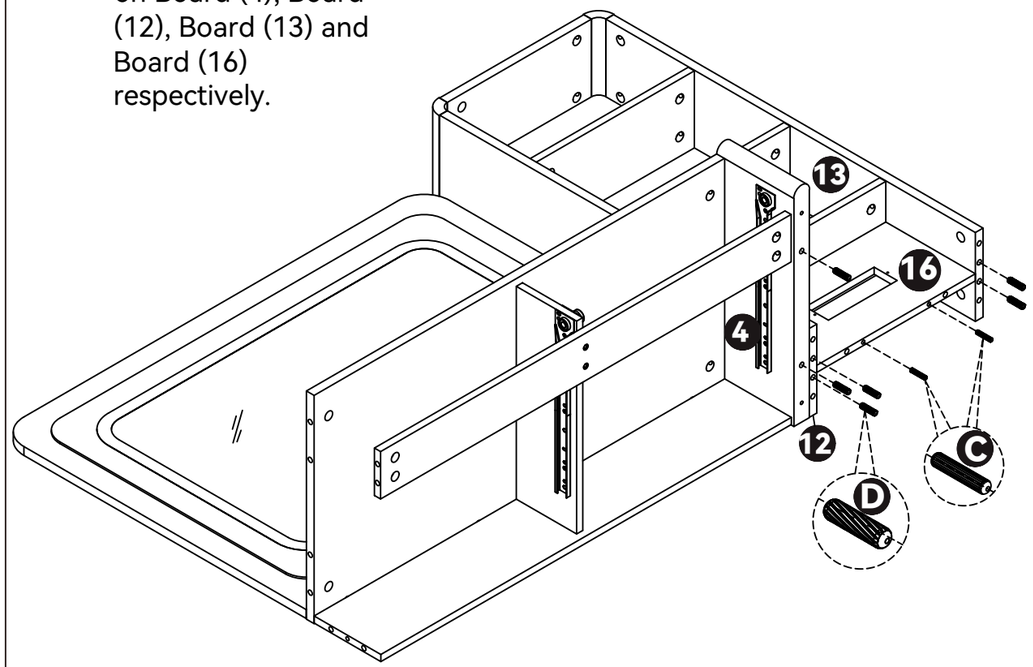

Email : service@grandtunnel.com

EN

Step 27

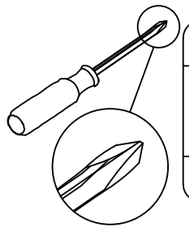

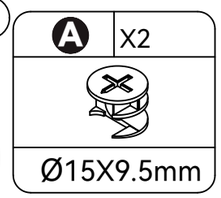

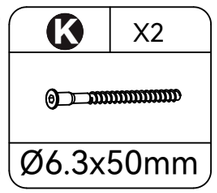

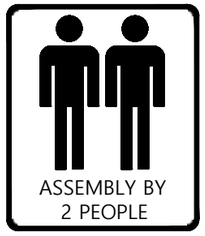

Use fittings A and K to connect the two cabinets together.

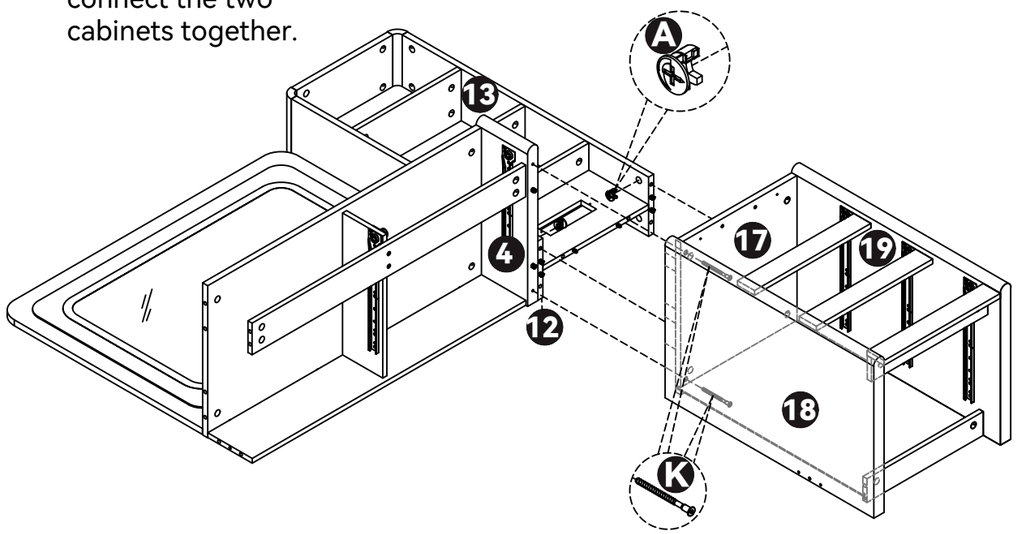

Insert the cam bolt into the hole first, then insert the cam lock and lock it.

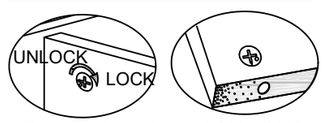

Proper orientation of CAM LOCK

Step 28

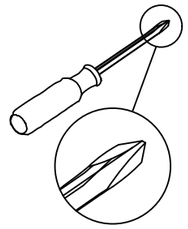

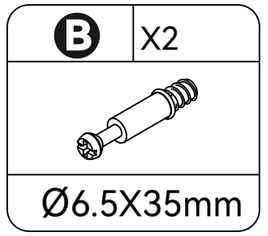

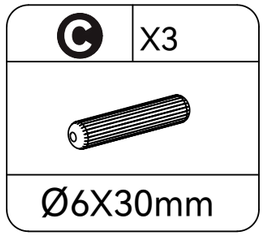

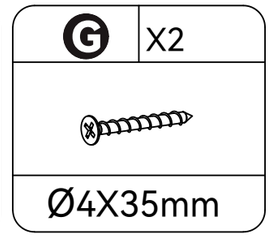

First use fittings C and G to mount Board (20) on Board (17), then install fittings B and C on Board (18).

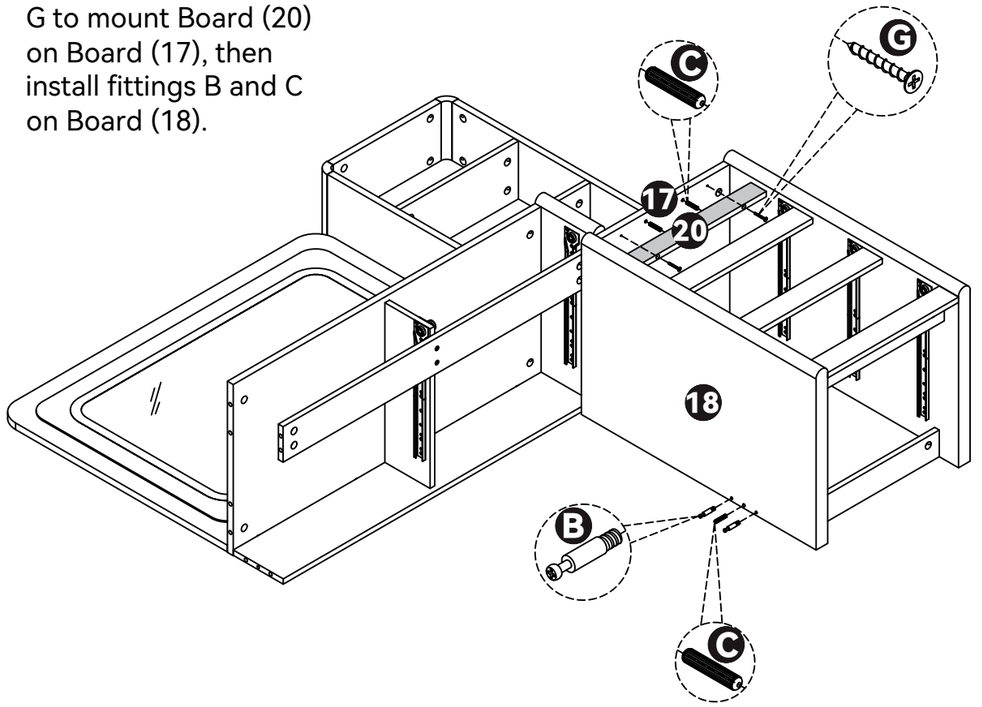

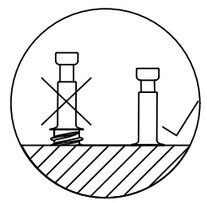

Step 29

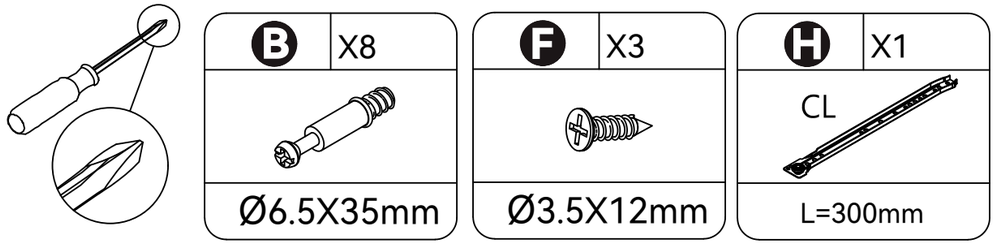

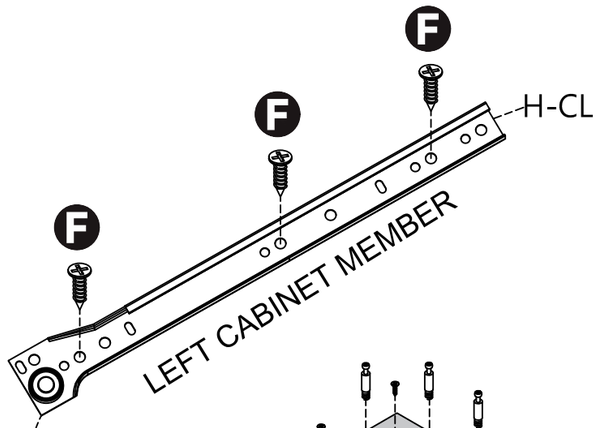

First use fitting F to install fitting H on Board (3), then install fitting B on Board (3).

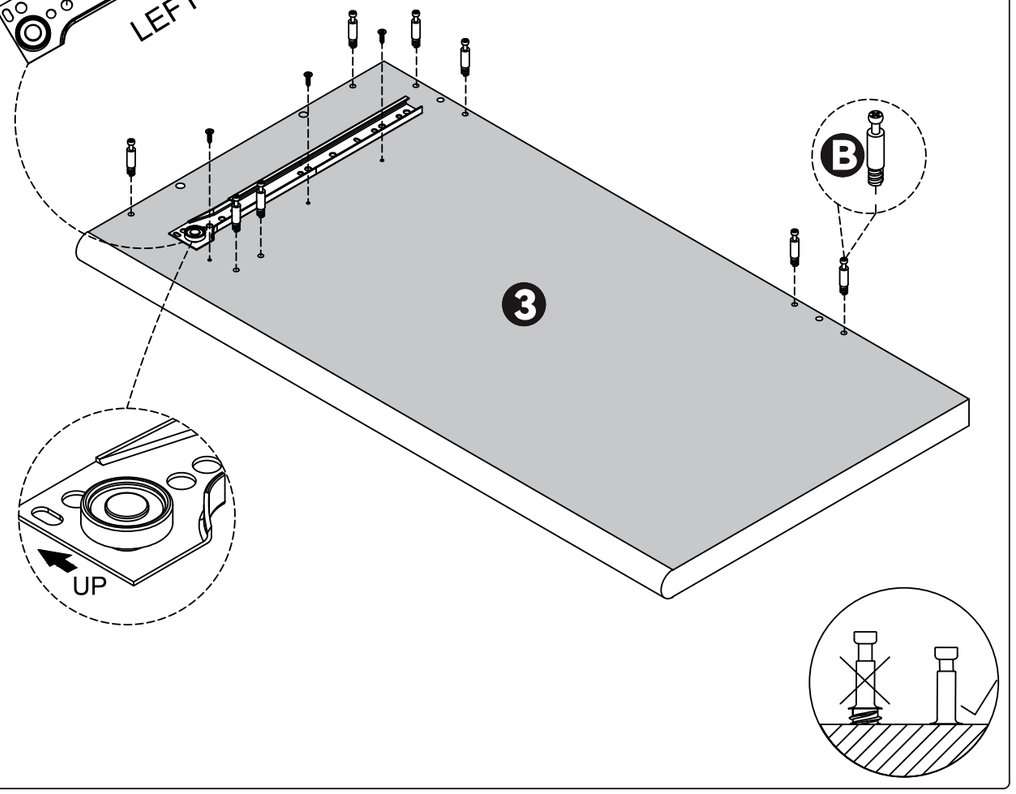

Step 30

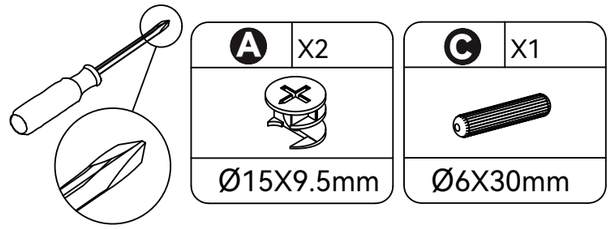

Use fittings A and C to mount Board (8) on Board (3).

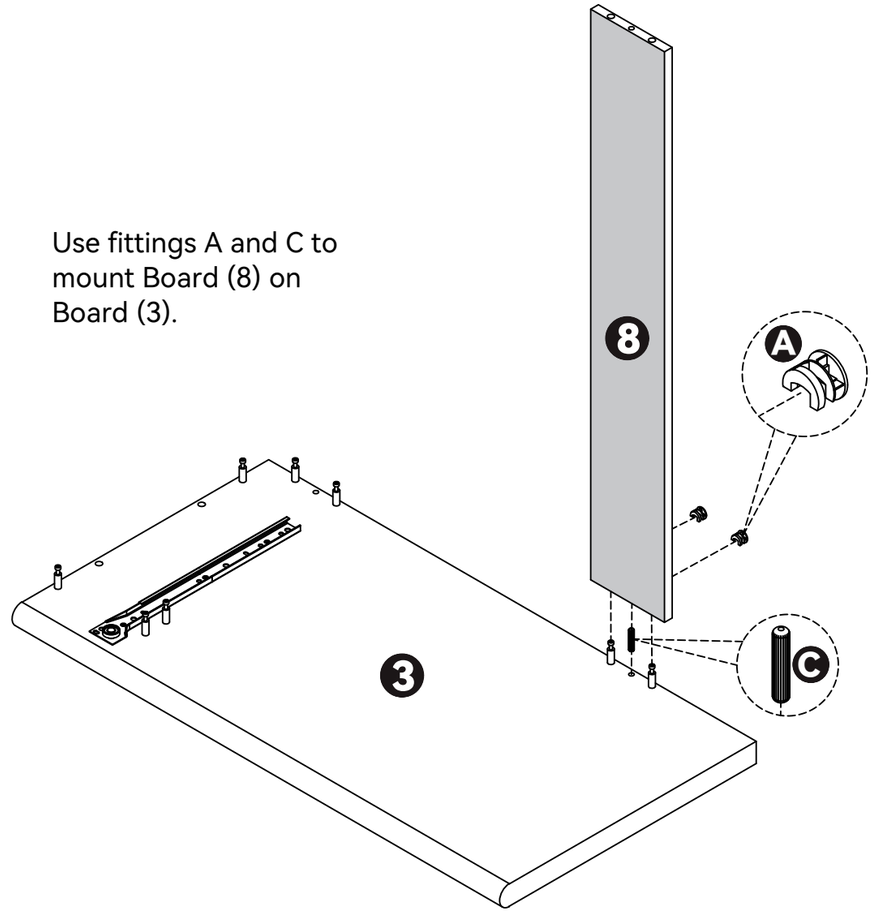

Insert the cam bolt into the hole first, then insert the cam lock and lock it.

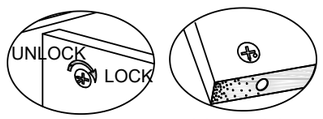

Proper orientation of CAM LOCK

Email : service@grandtunnel.com

Step 31

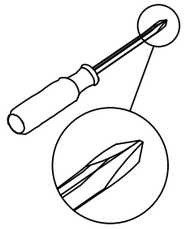

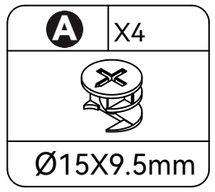

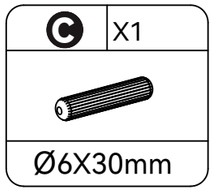

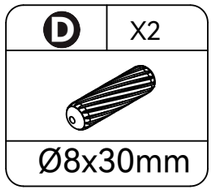

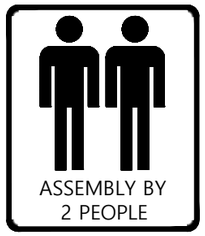

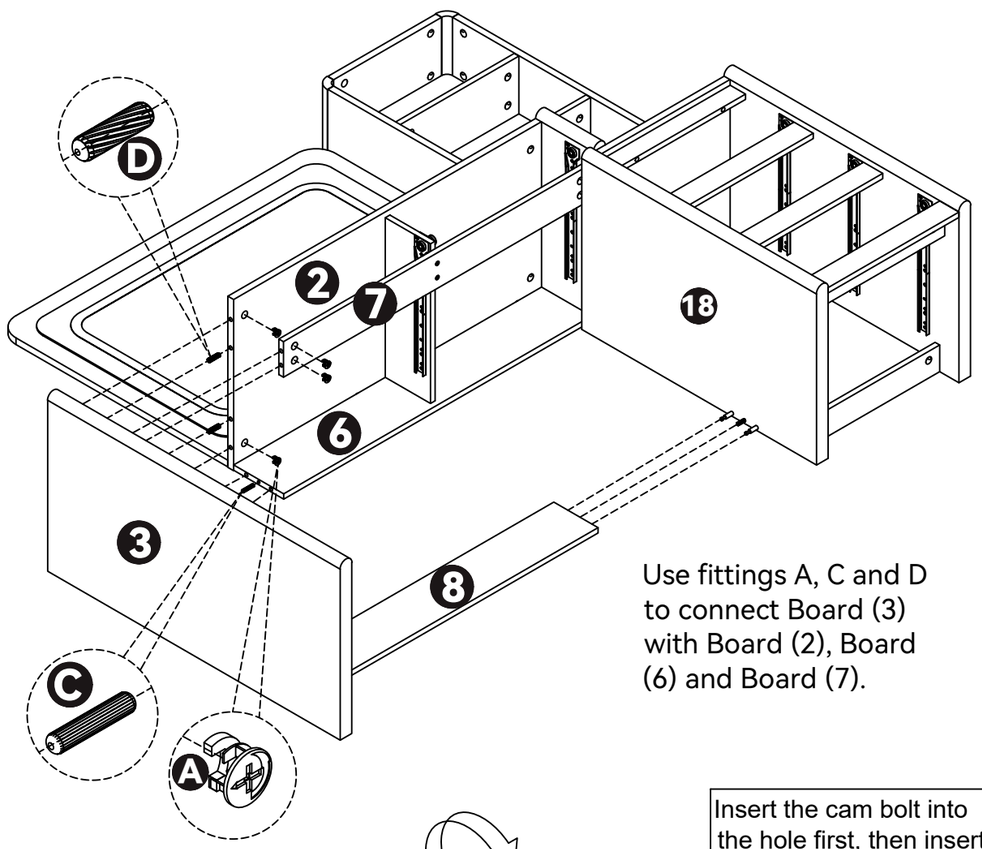

Use fittings A, C and D to connect Board (3) with Board (2), Board (6) and Board (7).



Fip it over.

Insert the cam bolt into the hole first, then insert the cam lock and lock it.

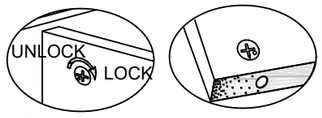

Proper orientation of CAM LOCK

Email : service@grandtunnel.com

Step 32

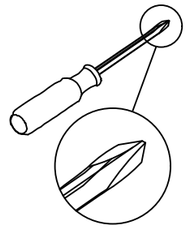

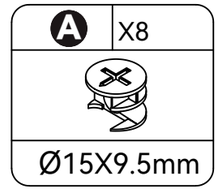

Install fitting A on Board (8), Board (12), Board (13) and Board (16) respectively.

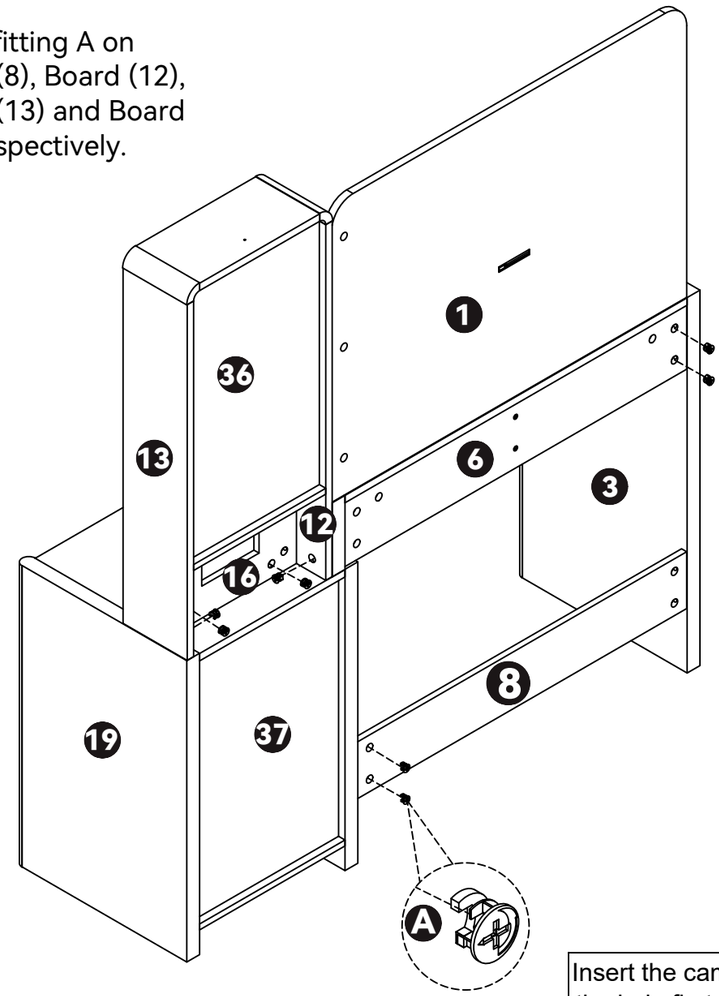

Insert the cam bolt into the hole first, then insert the cam lock and lock it.

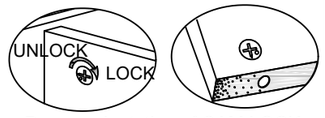

Proper orientation of CAM LOCK

Email : service@grandtunnel.com

Step 33

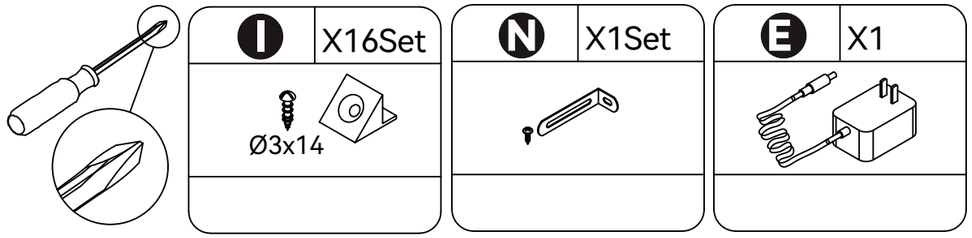

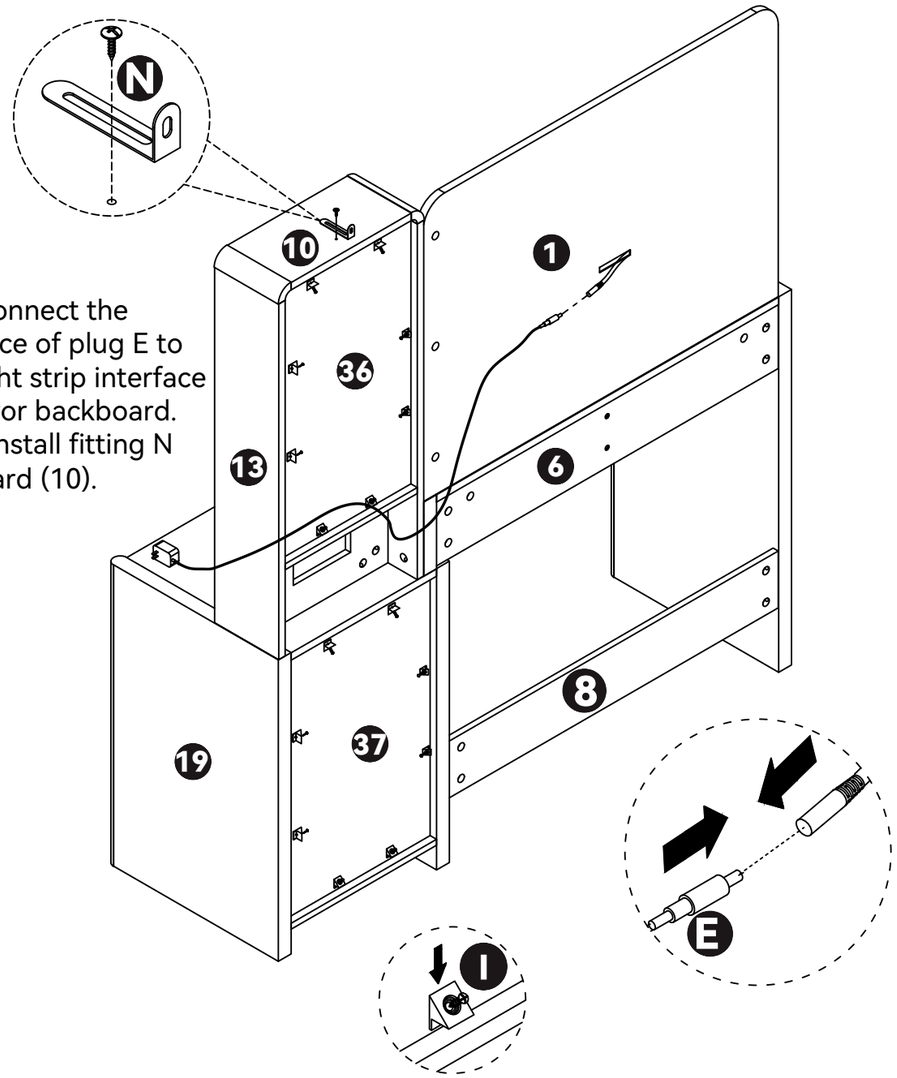

First connect the interface of plug E to the light strip interface of mirror backboard. Then install fitting N on Board (10).

Insert the plastic clip into the backboard slot, pass the screw through the hole on the clip, and lock it in place.

Step 34

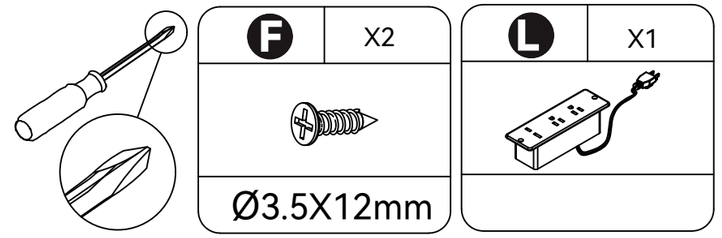

First use fitting F to install fitting L on Board (16), then plug matching power supply E into L.

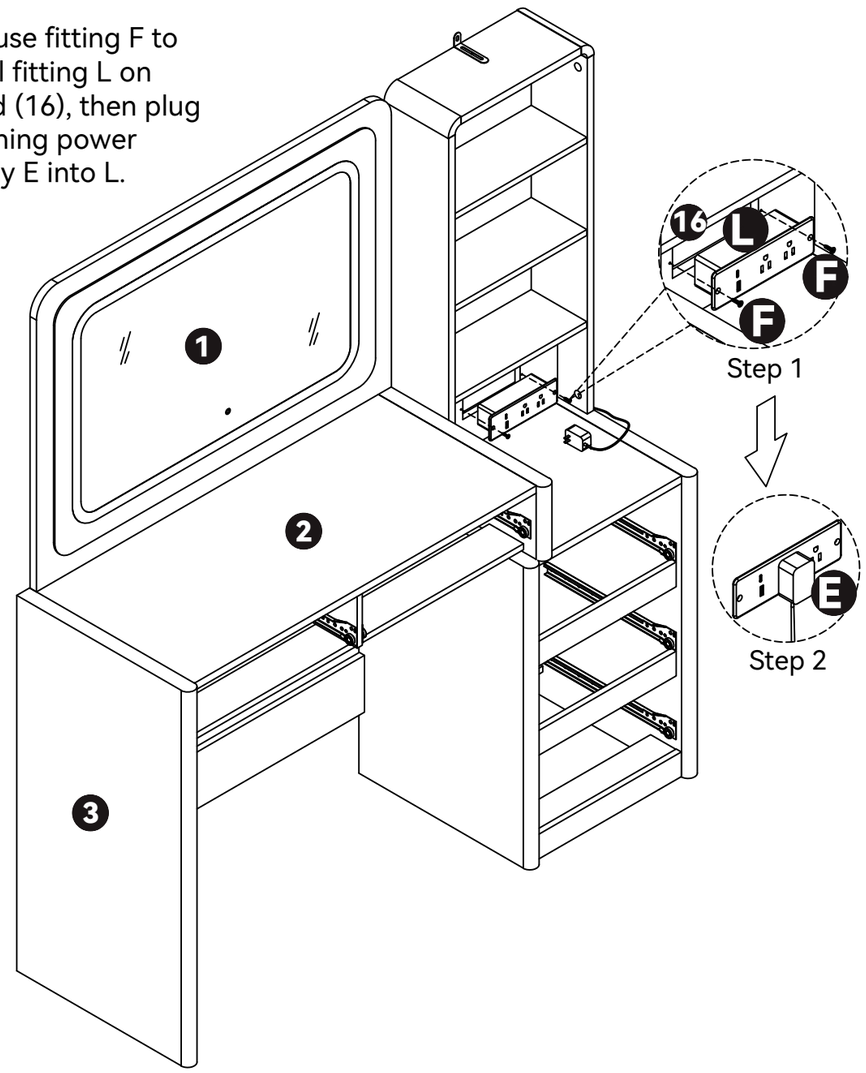

Step 35

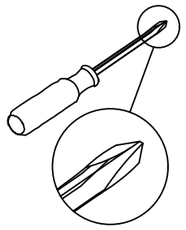

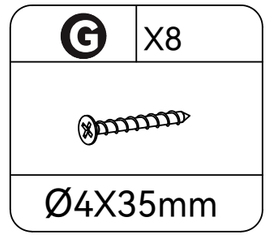

Use fitting G to connect Board (27), Board (28) and Board (29).

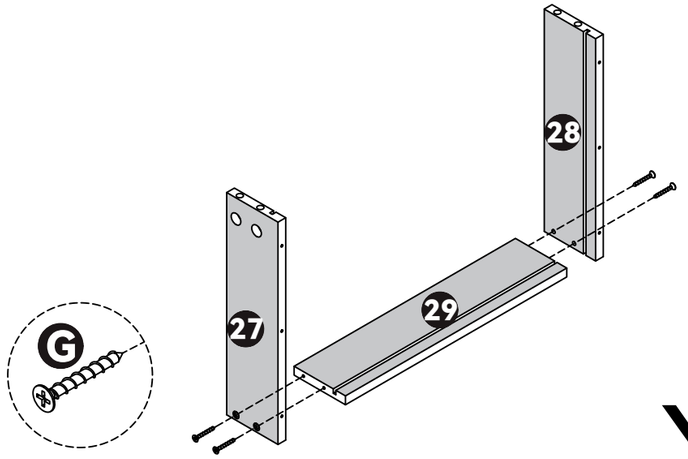

X2

Insert Board (30) into the grooves of Board (27), Board (28) and Board (29).

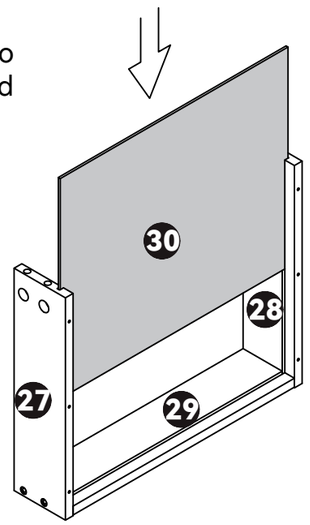

X2

Email : service@grandtunnel.com

Step 36

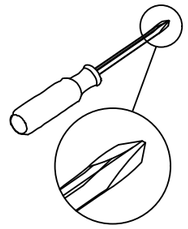

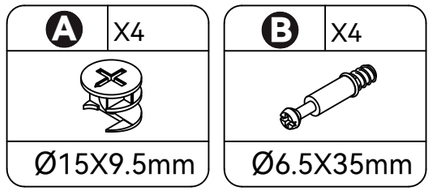

Install fitting B on Board (25).

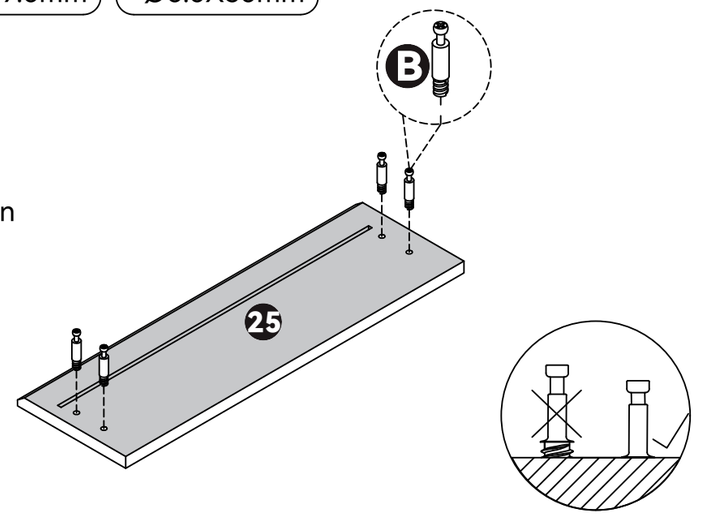

Use fitting A to connect Board (25) to Board (27) and Board (28).

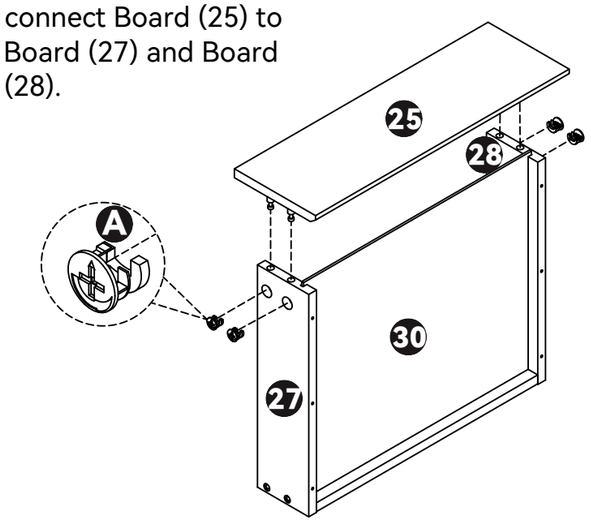

Insert the cam bolt into the hole first, then insert the cam lock and lock it.

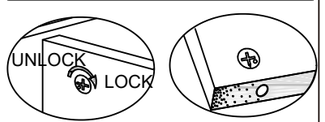

Proper orientation of CAM LOCK

Email : service@grandtunnel.com

EN

Step 37

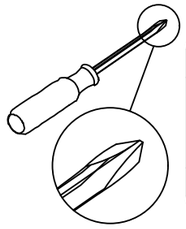

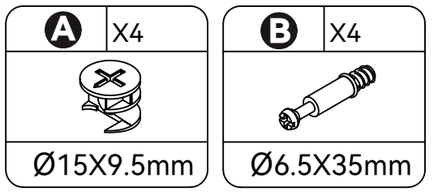

Install fitting B on Board (26).

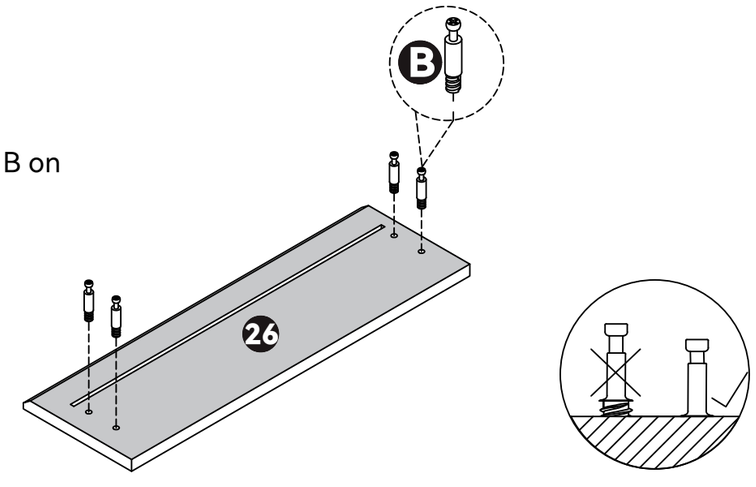

Use fitting A to connect Board (26) to Board (27) and Board (28).

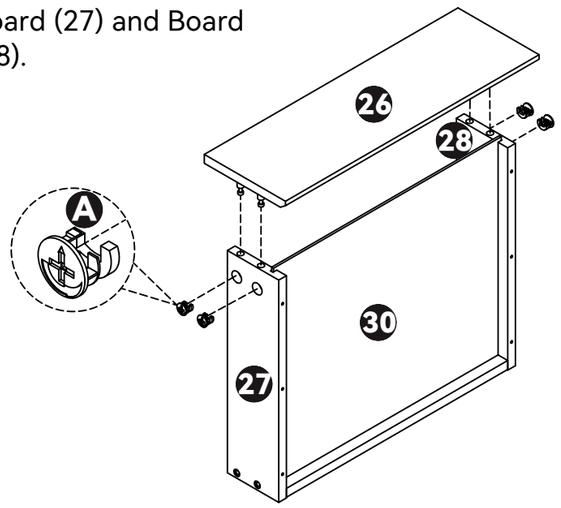

Insert the cam bolt into the hole first, then insert the cam lock and lock it.

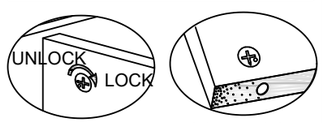

Proper orientation of CAM LOCK

Email : service@grandtunnel.com

Step 38

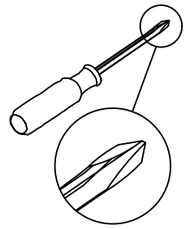

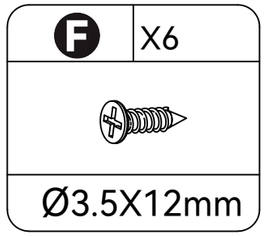

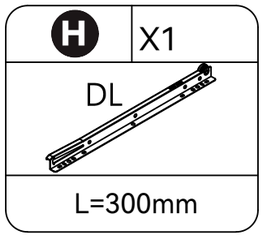

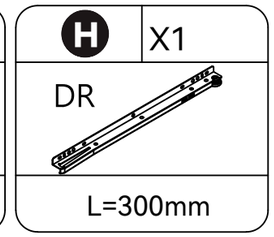

Use fitting F to install fitting H on the drawer.

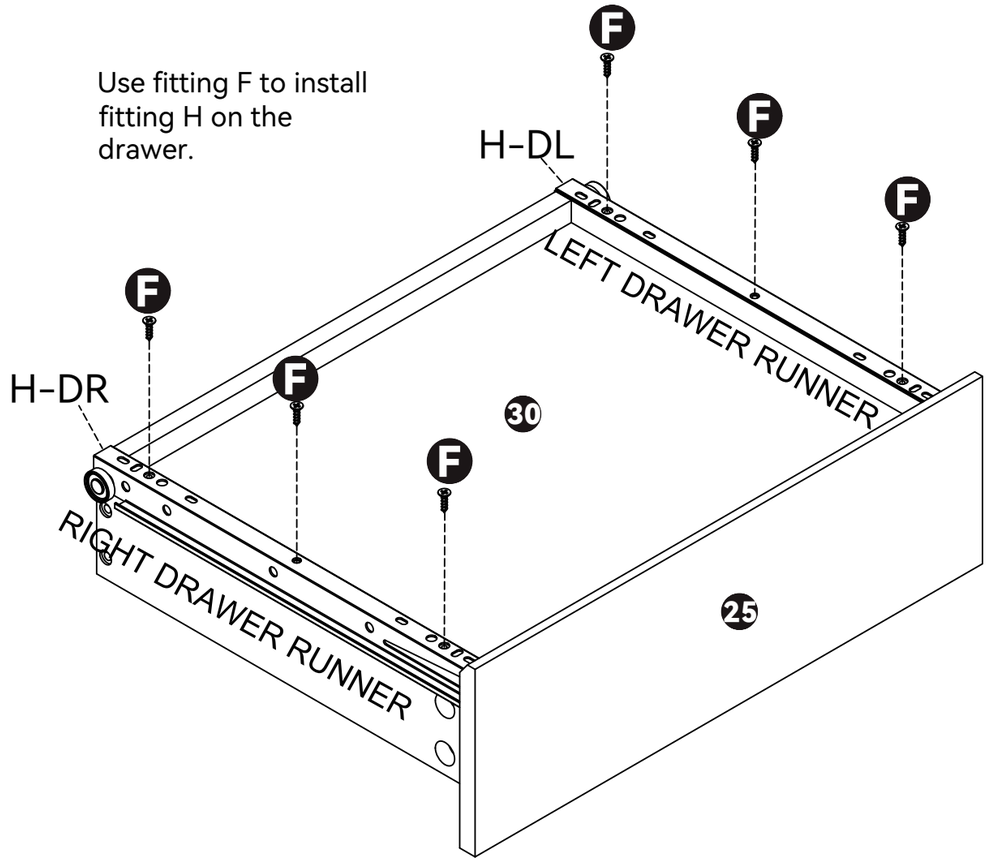

EN

Email : service@grandtunnel.com

Step 39

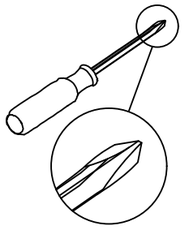

F	X6
	
Ø3.5X12mm	

H	X1
DL 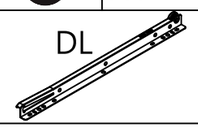	
L=300mm	

H	X1
DR 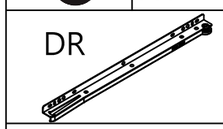	
L=300mm	

Use fitting F to install fitting H on the drawer.

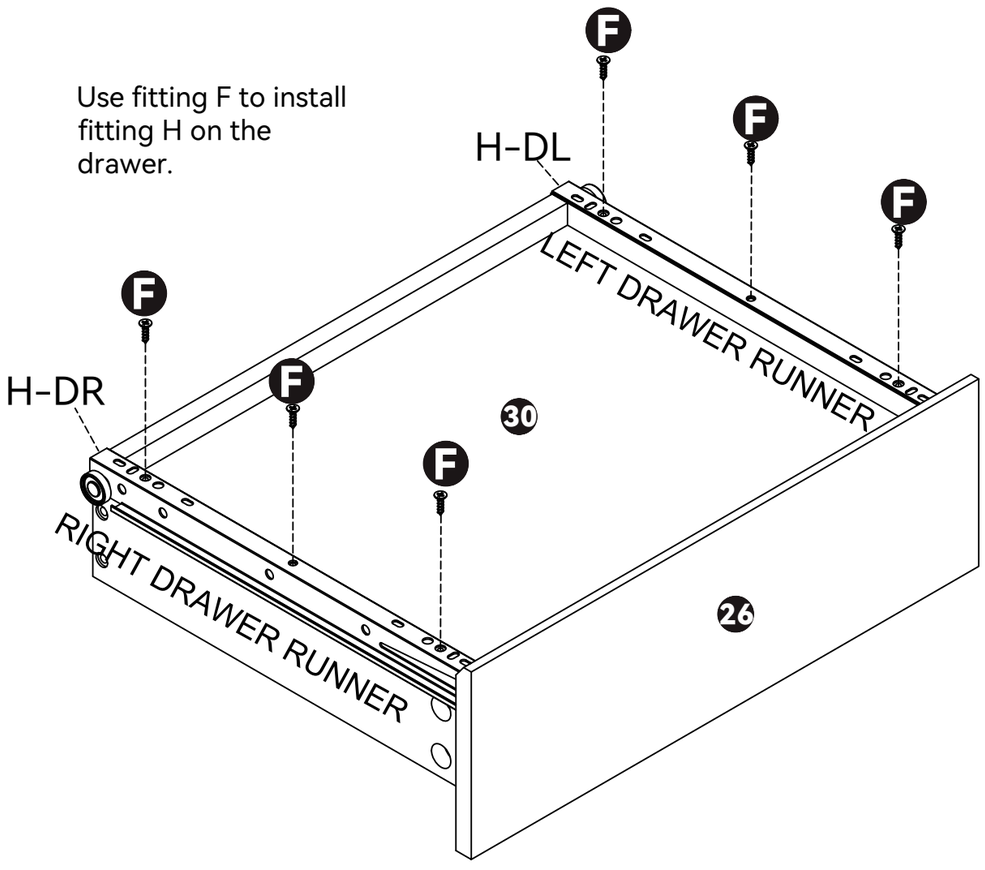

Email : service@grandtunnel.com

Step 40

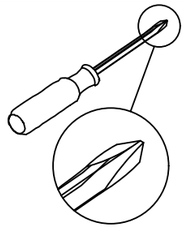

G	X12
	
Ø4X35mm	

Use fitting G to connect Board (32), Board (33) and Board (34).

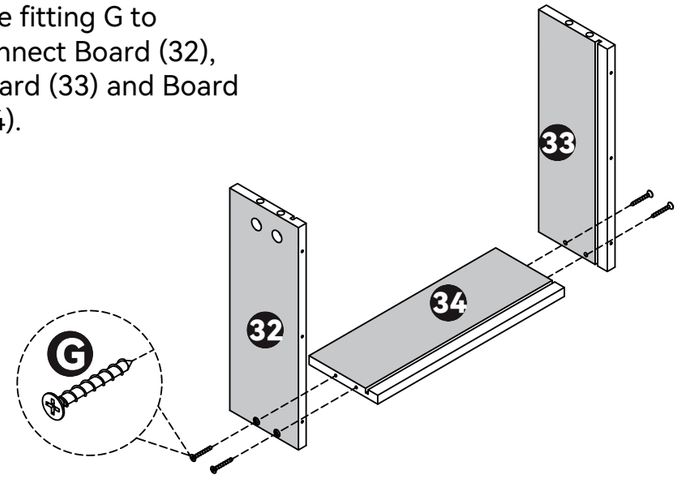

X3

Insert Board (35) into the grooves of Board (32), Board (33) and Board (34).

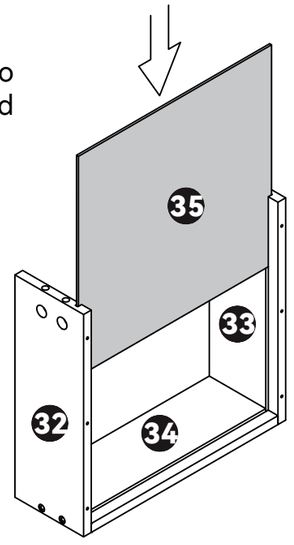

X3

Email : service@grandtunnel.com

EN

Step 41

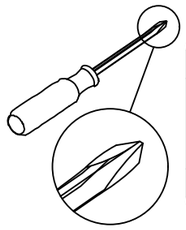

A	X12
	
Ø15X9.5mm	

B	X12
	
Ø6.5X35mm	

Install fitting B on Board (31).

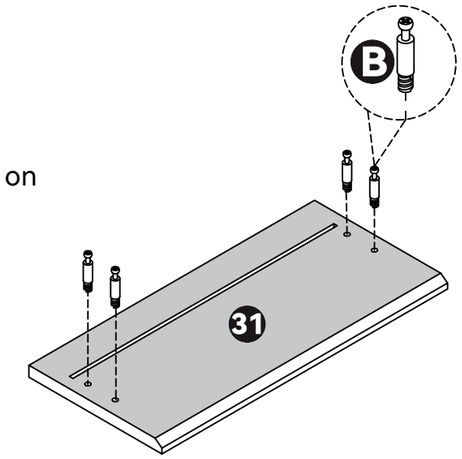

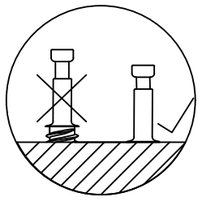

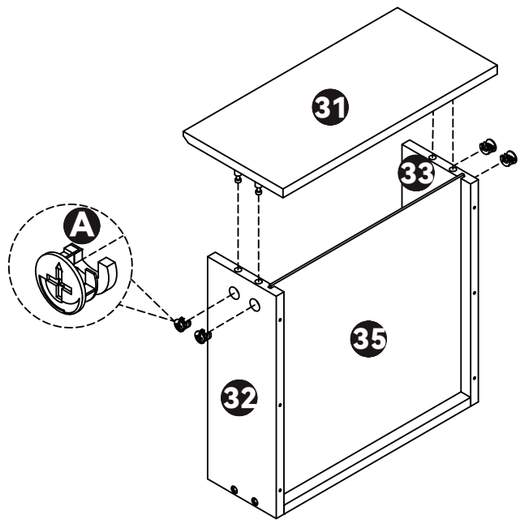

Use fitting A to connect Board (31) to Board (32) and Board (33).

Insert the cam bolt into the hole first, then insert the cam lock and lock it.

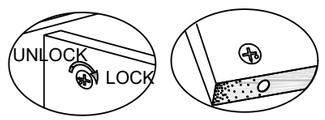

Proper orientation of CAM LOCK

Email : service@grandtunnel.com

Step 42

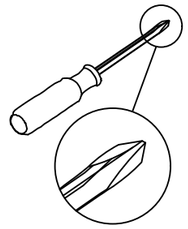

F	X18
	
Ø3.5X12mm	

H	X3
DL	
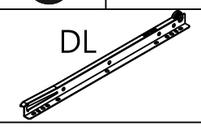	
L=300mm	

H	X3
DR	
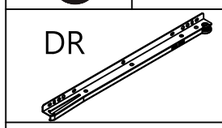	
L=300mm	

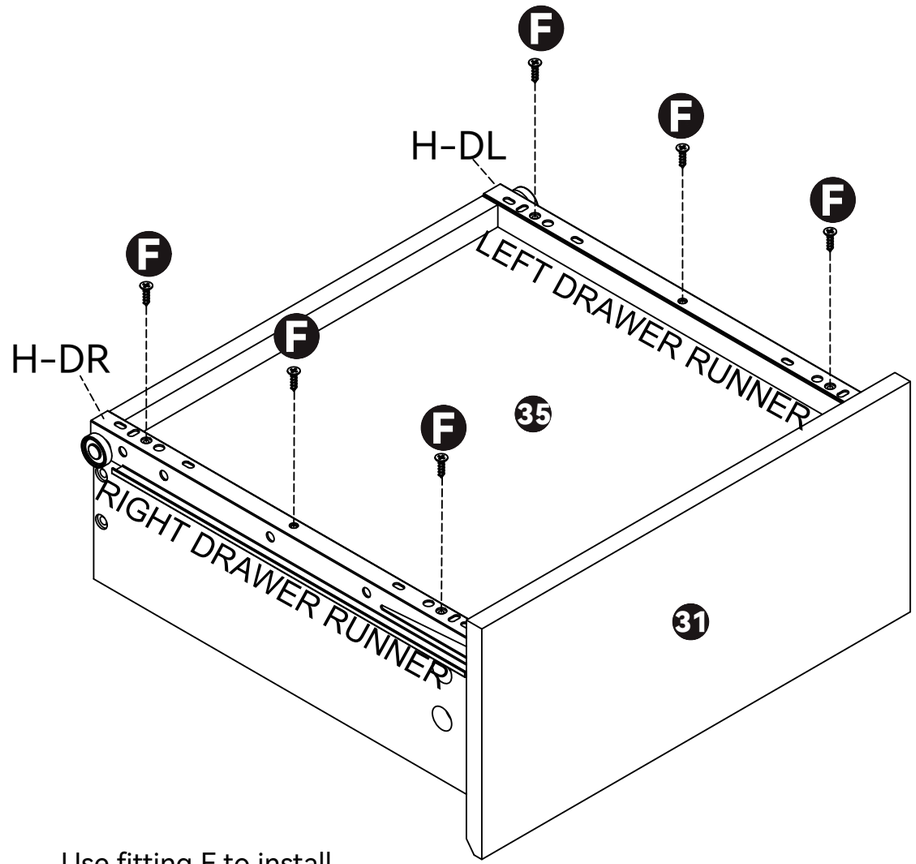

Use fitting F to install fitting H on the drawer.

X3

Email : service@grandtunnel.com

EN

Step 43

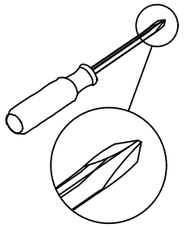

N	X1Set
	

NOTE:The tipping restraint hardware included is forwooden stud wall construction. It must be attached to awall stud.
Depending upon your wall construction differentanchor hardware maybe required. Please contact your localhardware store for assistance.
Young children can beseriously injured by tipping furniture. You must install thetipping restraint hardware with the unit to prevent the unitfrom tipping, causing any accidents or damage.
The tippingrestraints are intended only as a deterrent and are not asubstitute for proper adult supervision.
The tippingrestraints are not earthquake restraints.
If you wish to addthe extra security of earthquake restraints, they must bepurchased and installed separately.

Install the tipping restraint hard ware

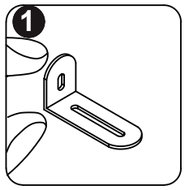

1.make mark on the wall

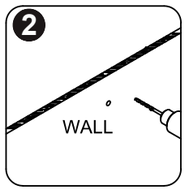

2.drill one Ø6mm holes on the wall

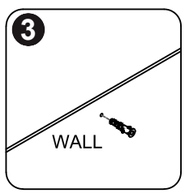

3.put one anchors in the holes

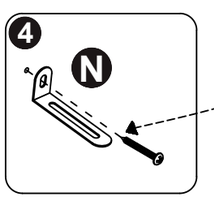

4.fix the device on the wall by the long screws



Email : service@grandtunnel.com

Step 44

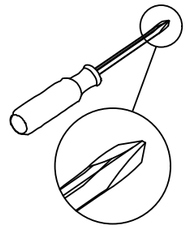

Place the drawers into their corresponding positions in order.

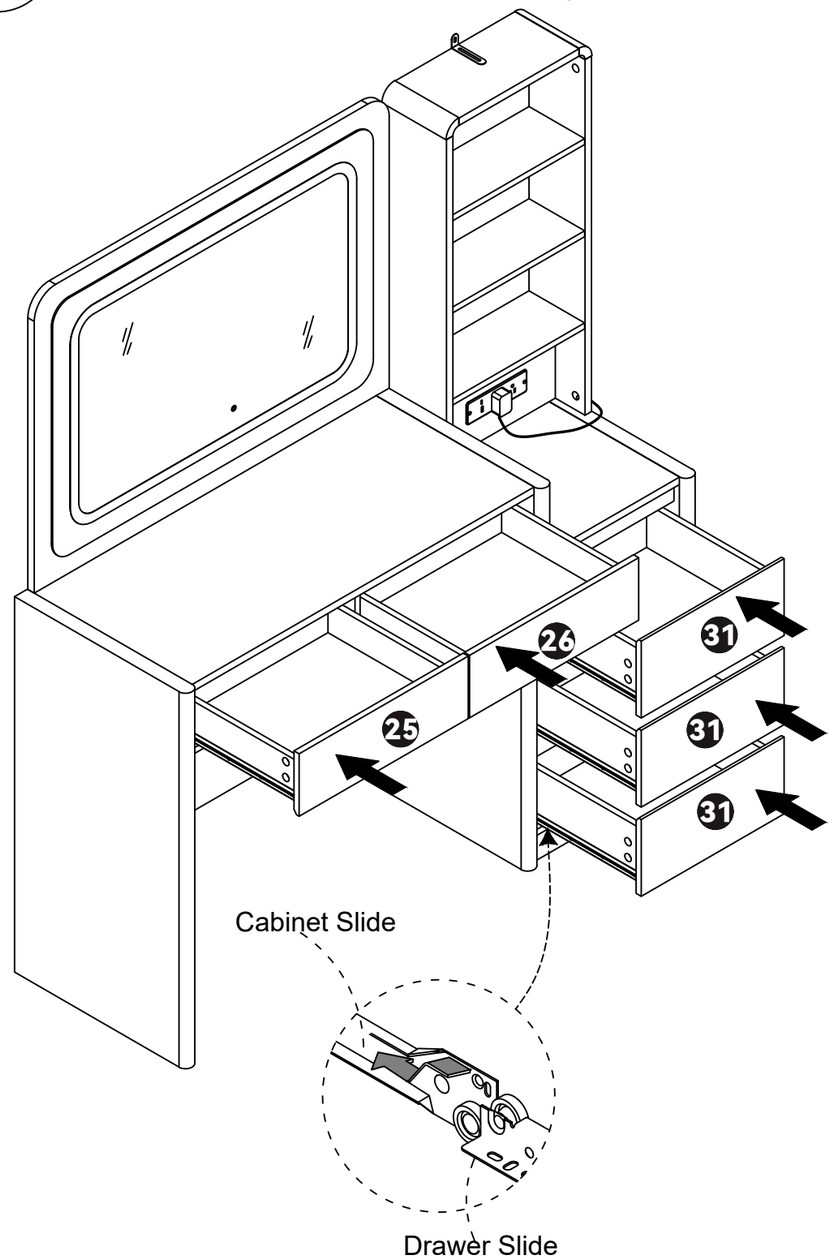

Email : service@grandtunnel.com

EN

Step 45

M	X70
Ø21mm	

Peel off the protective film of the mirror, and finish the installation.

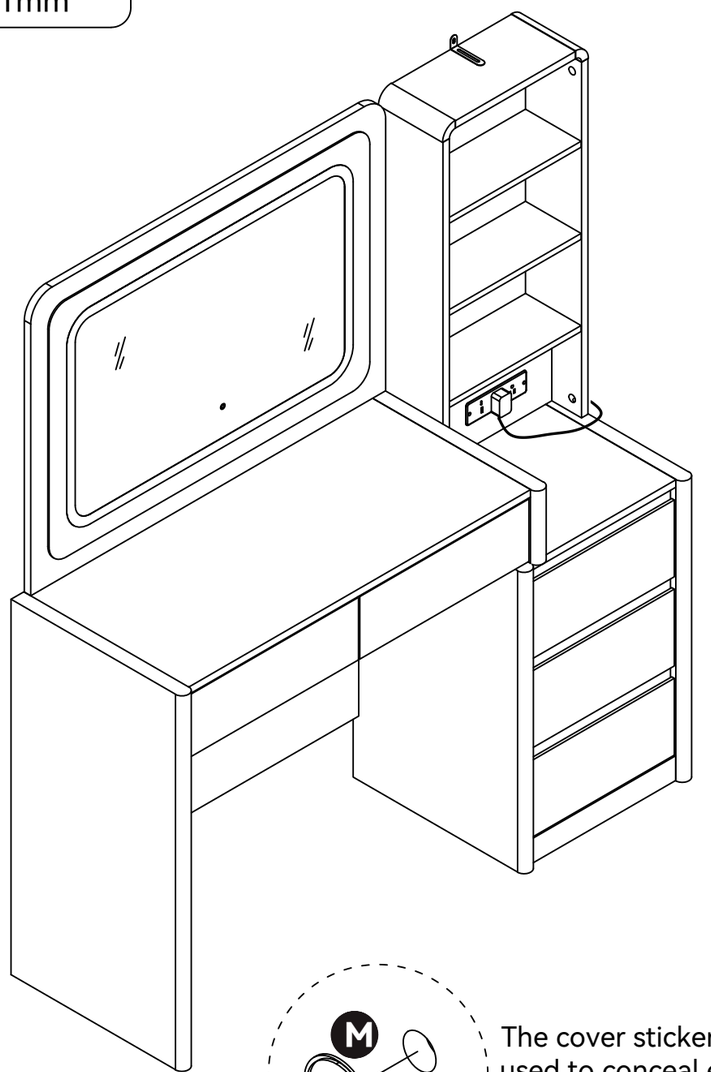

The cover sticker (M) is used to conceal exposed screw components.

Email : service@grandtunnel.com