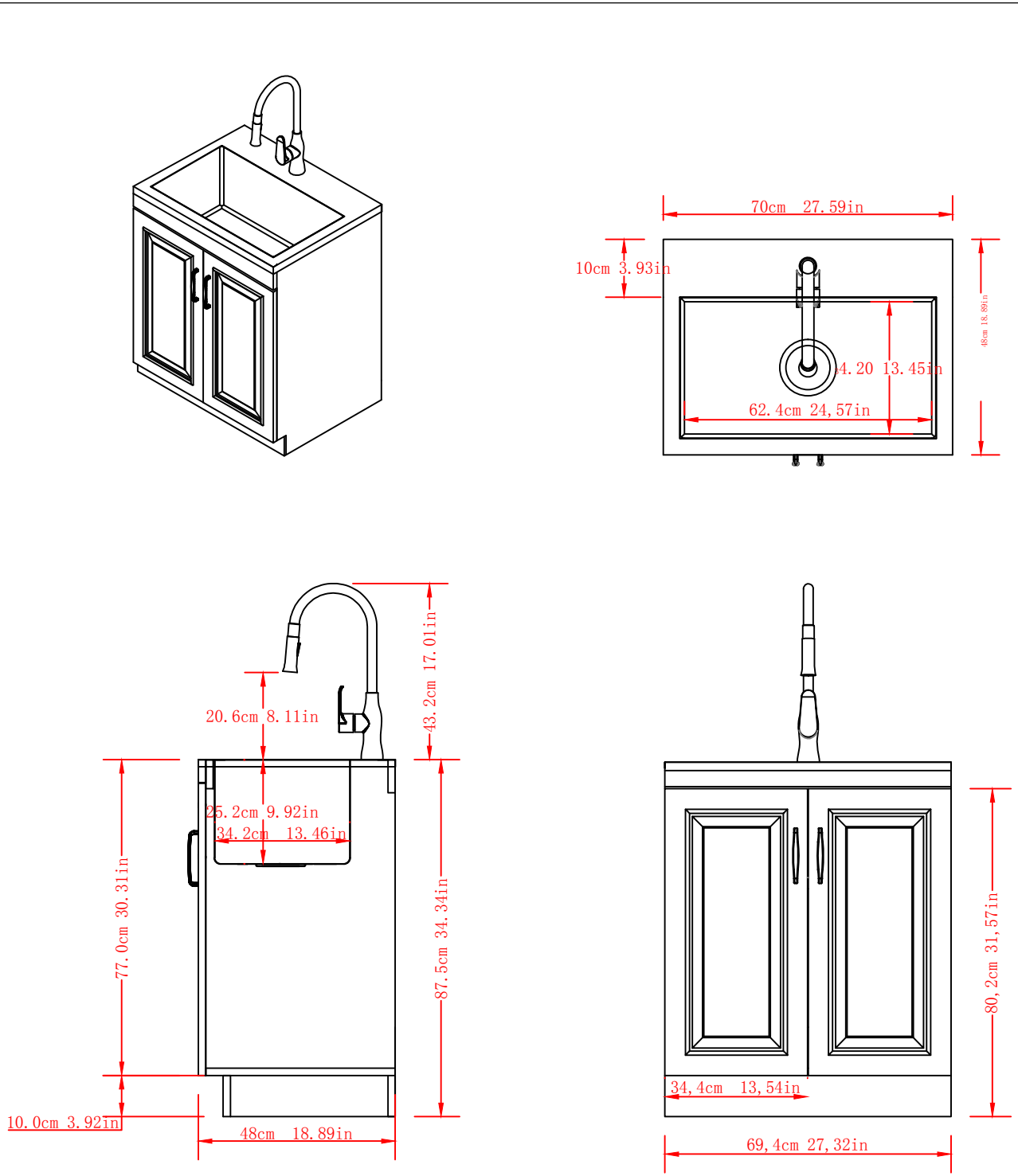
70cm 27.59in
10cm 3.93in
48cm 18.89in
4.20 13.45in
62.4cm 24,57in
17.01in
43.2cm
20.6cm 8.11in
25.2cm 9.92in
34.2cm 13.46in
77.0cm 30.31in
87.5cm 34.34in
10.0cm 3.92in
48cm 18.89in
80,2cm 31,57in
34,4cm 13,54in
69,4cm 27,32in