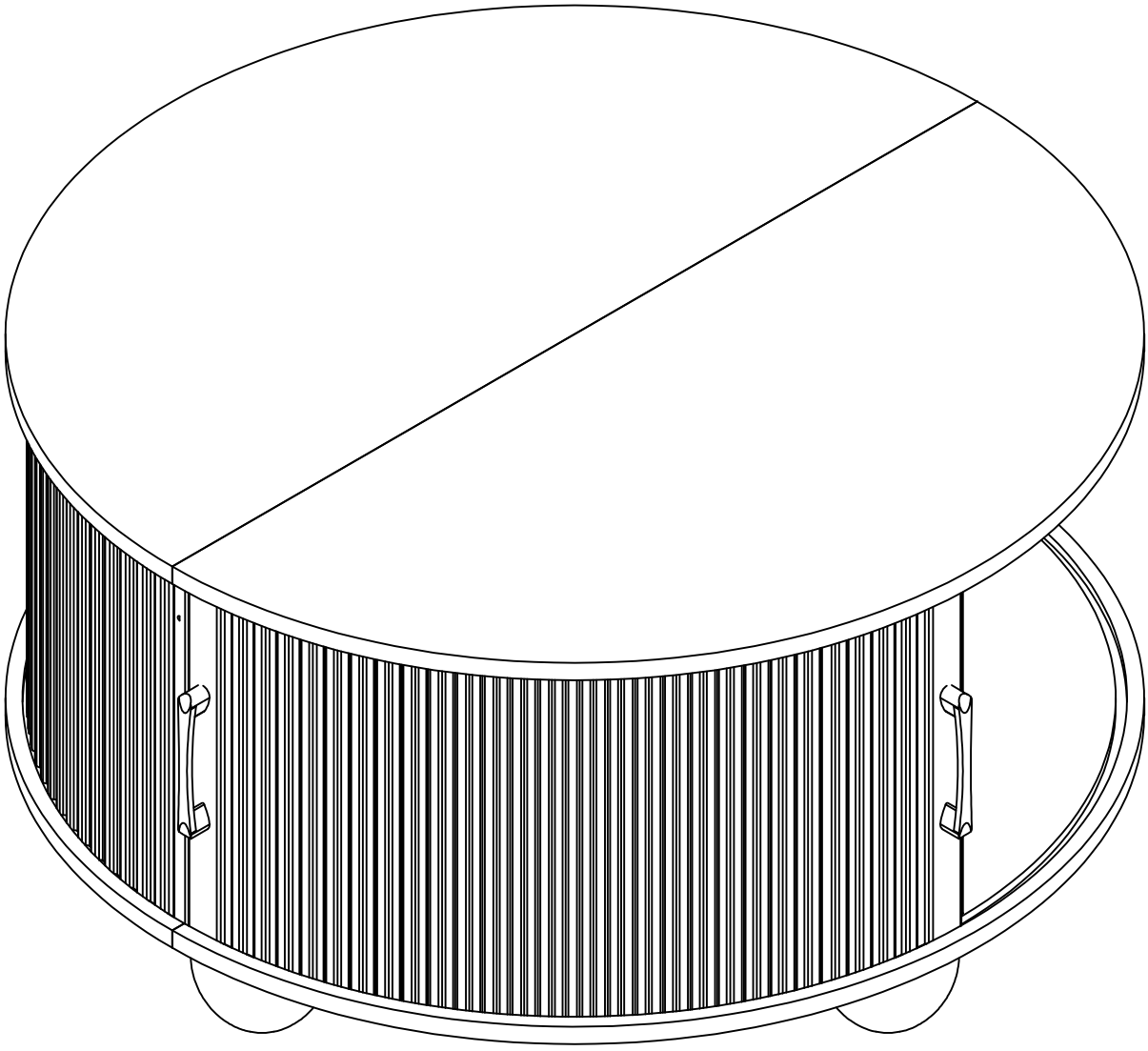

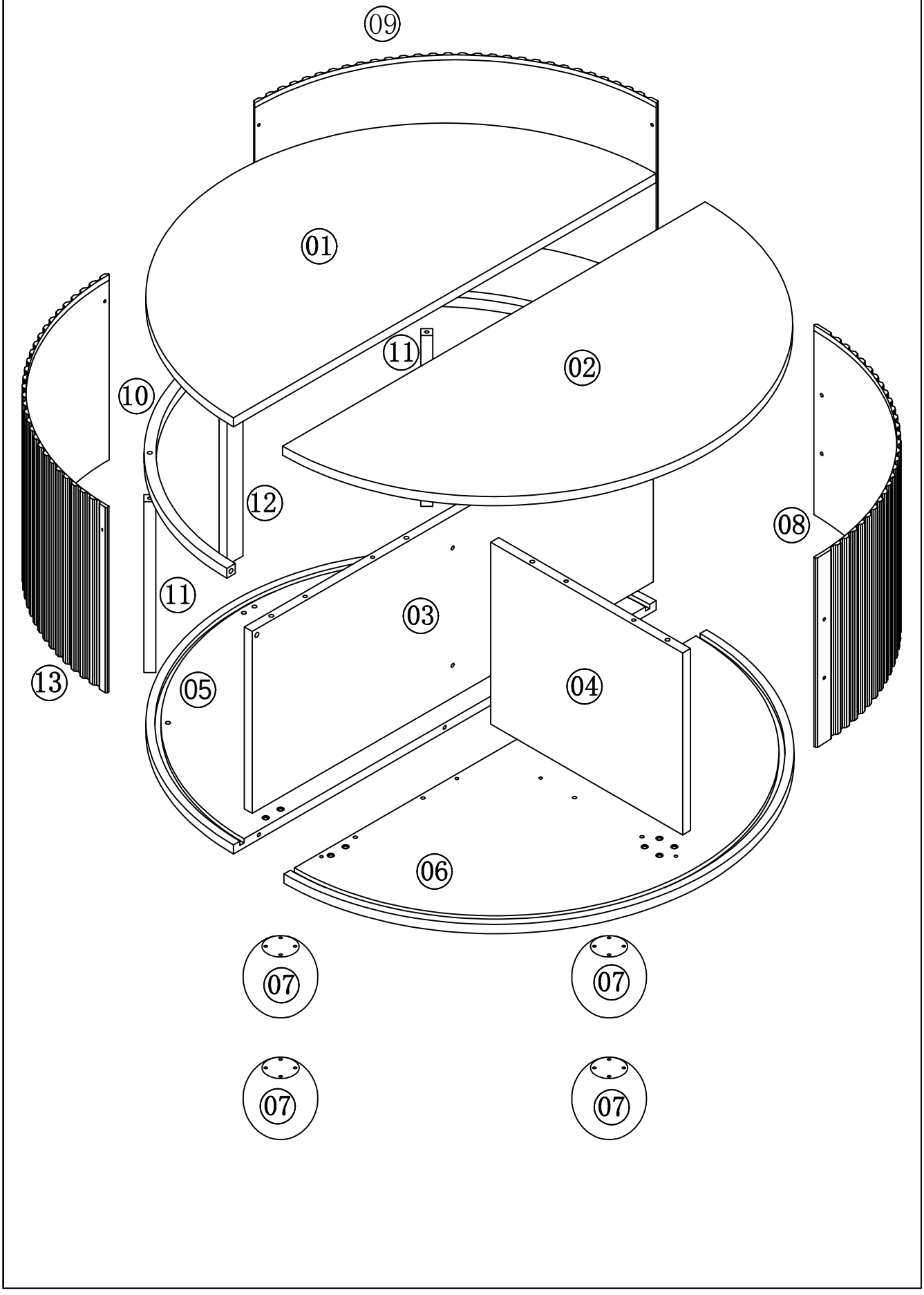
09
01
11
02
10
12
08
11
03
13
05
04
06
07
07
07
07

01 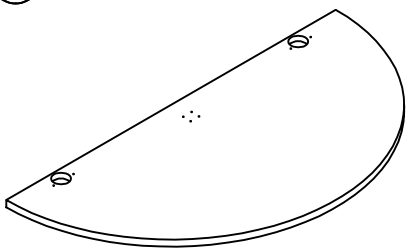 1 PC	02 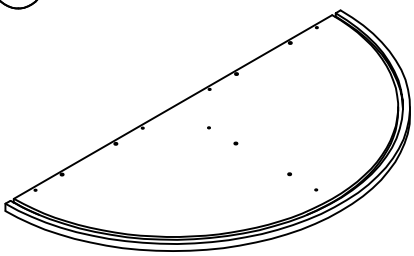 1 PC	03 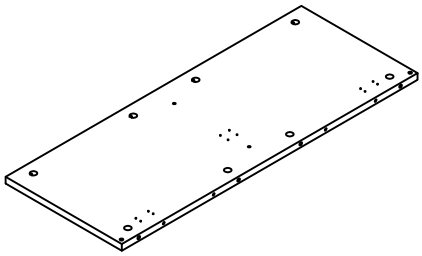 1 PC
04 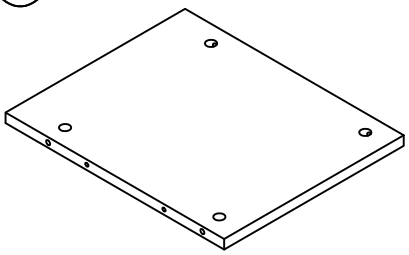 1 PC	05 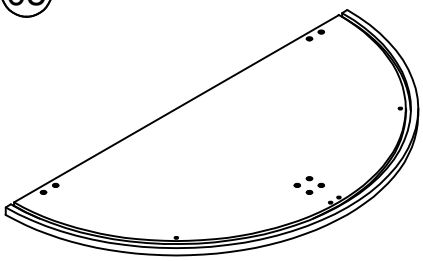 1 PC	06 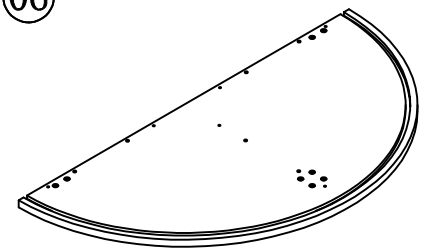 1 PC
07 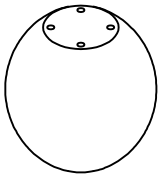 4 PCS	08 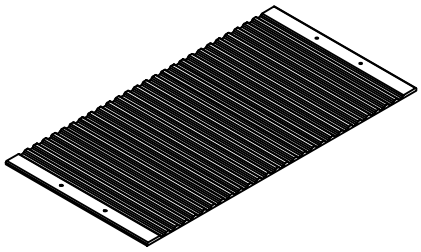 1 PC	09 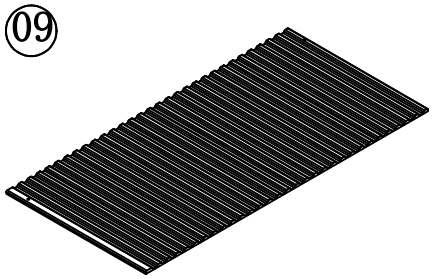 1 PC
10 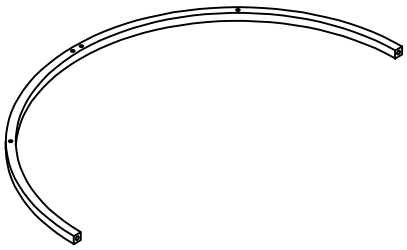 1 PC	11 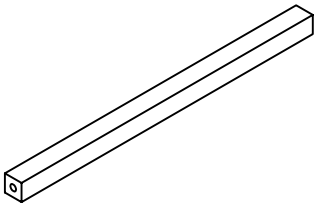 2 PCS	12 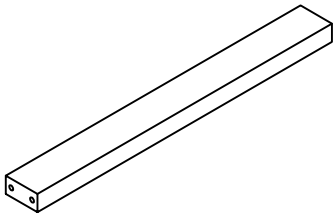 1 PC
13 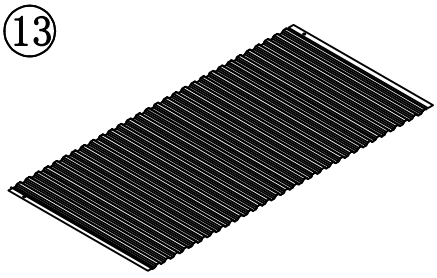 1 PC		

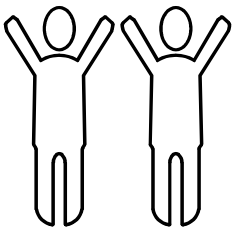
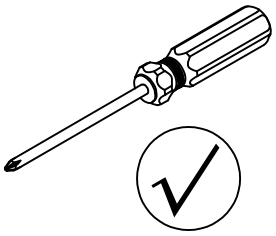
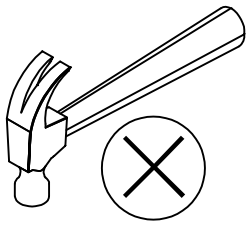

A 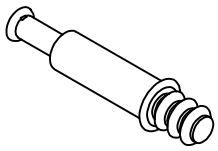 ϕ6*36mm 12PCS	B 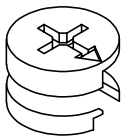 ϕ15*10mm 12PCS	C 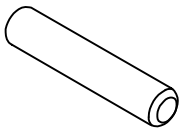 ϕ6*30mm 15PCS	D 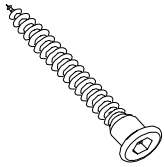 M5*45mm 22PCS
E 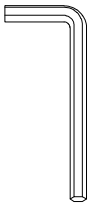 4mm 1PC	F  2PCS	G 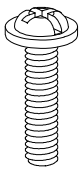 M4*10mm 4PCS	H 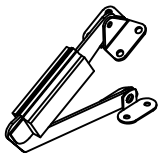 1PC
I 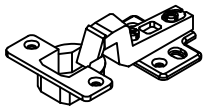 2PCS	J  M3*16mm 4PCS	K 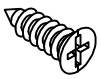 M3.5*14mm 20PCS	L 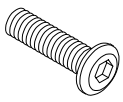 M6*26mm 6PCS
M 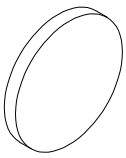 Ø25*2 4PCS	N 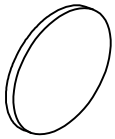 Ø21 12PCS		

STEP1

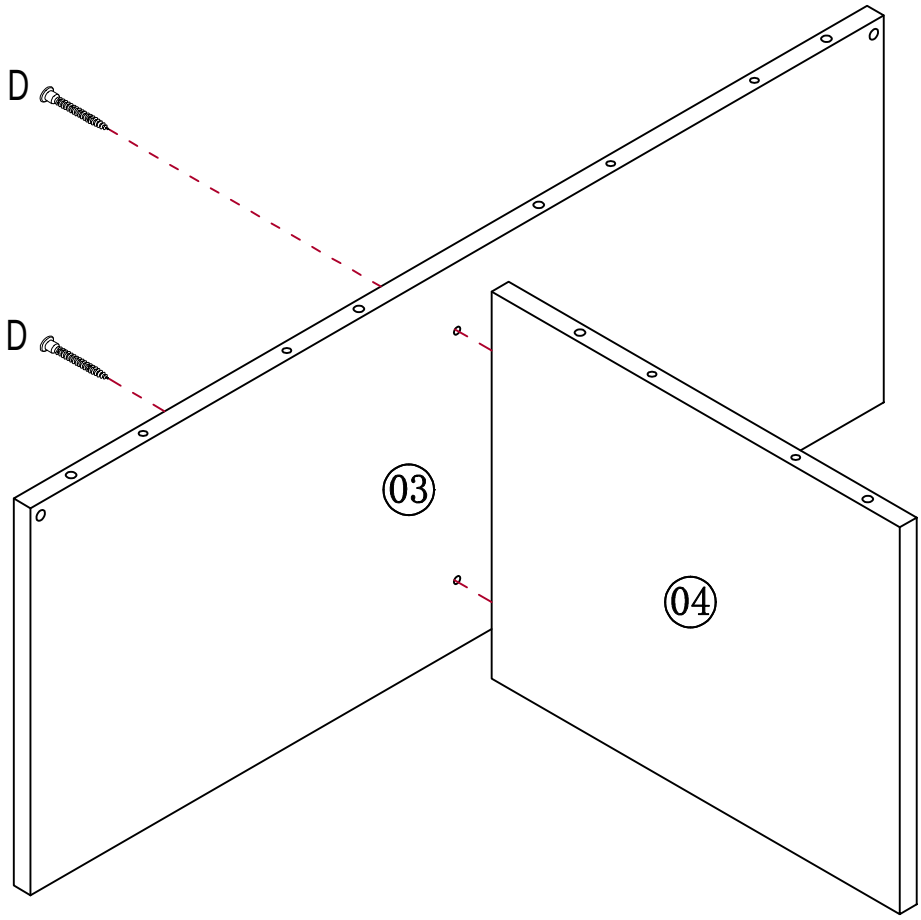

D*2PCS

STEP2

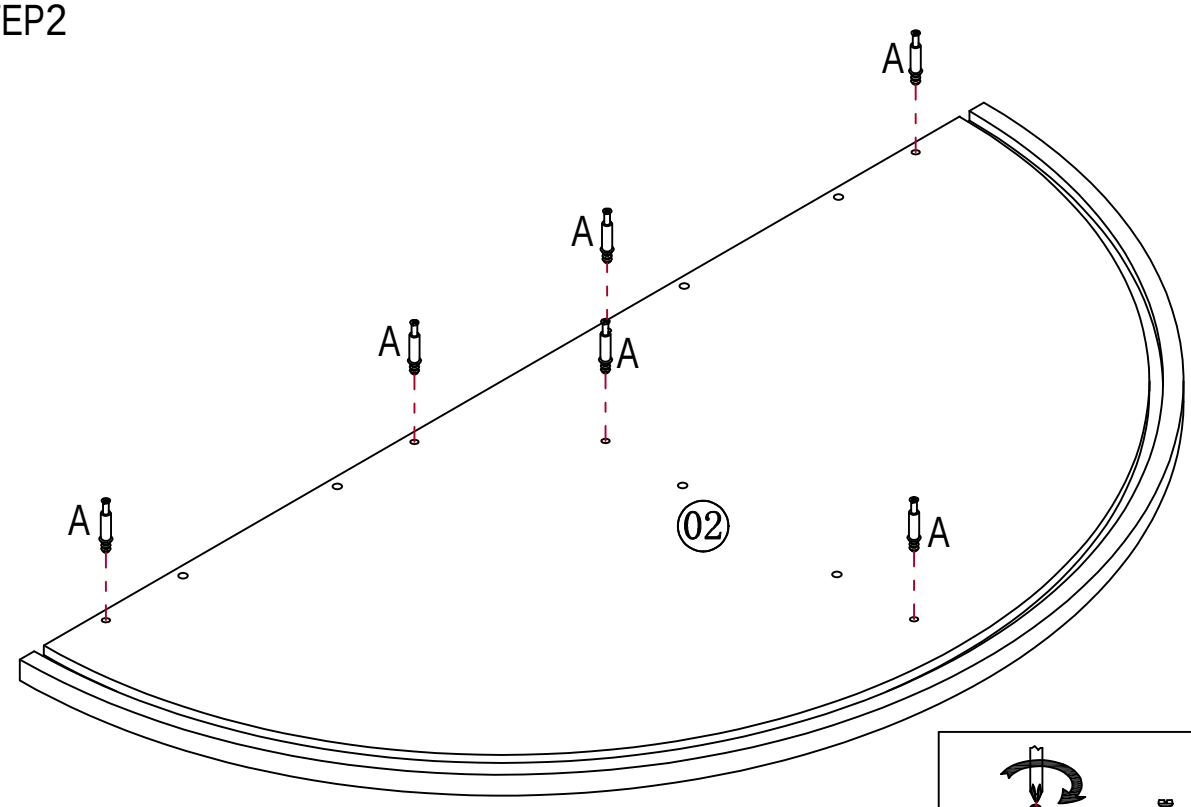

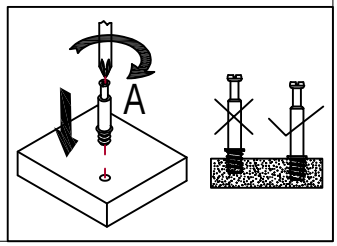

A*6PCS

STEP3

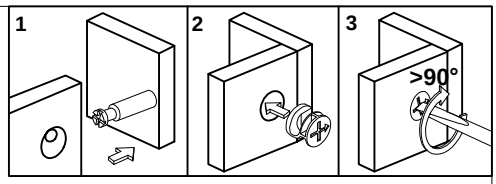

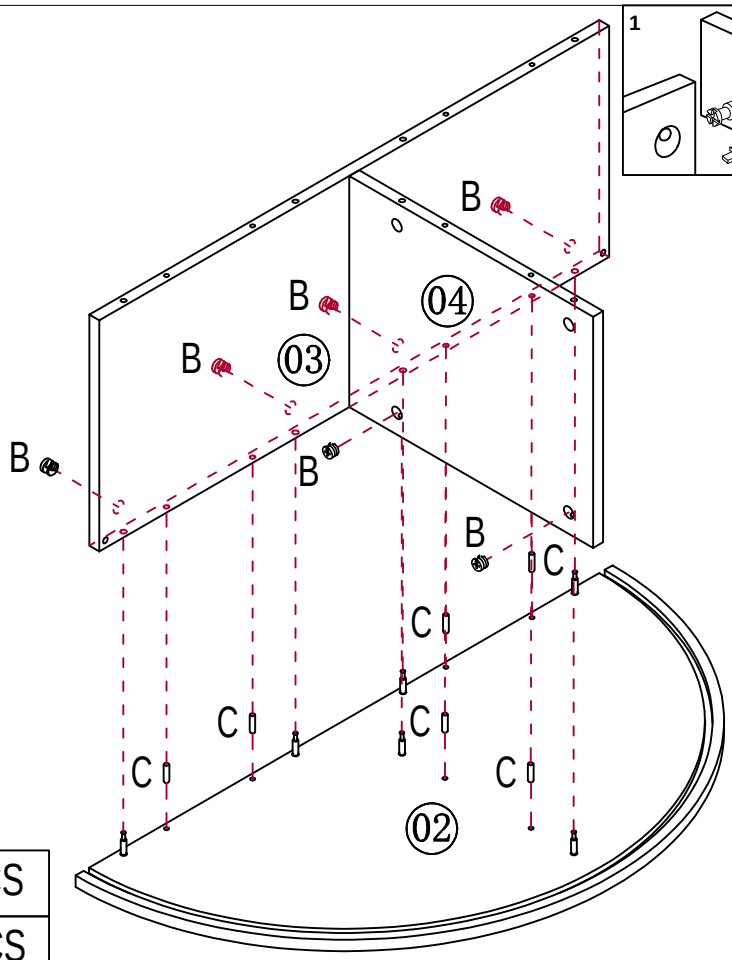

	B*6PCS
	C*6PCS

STEP4

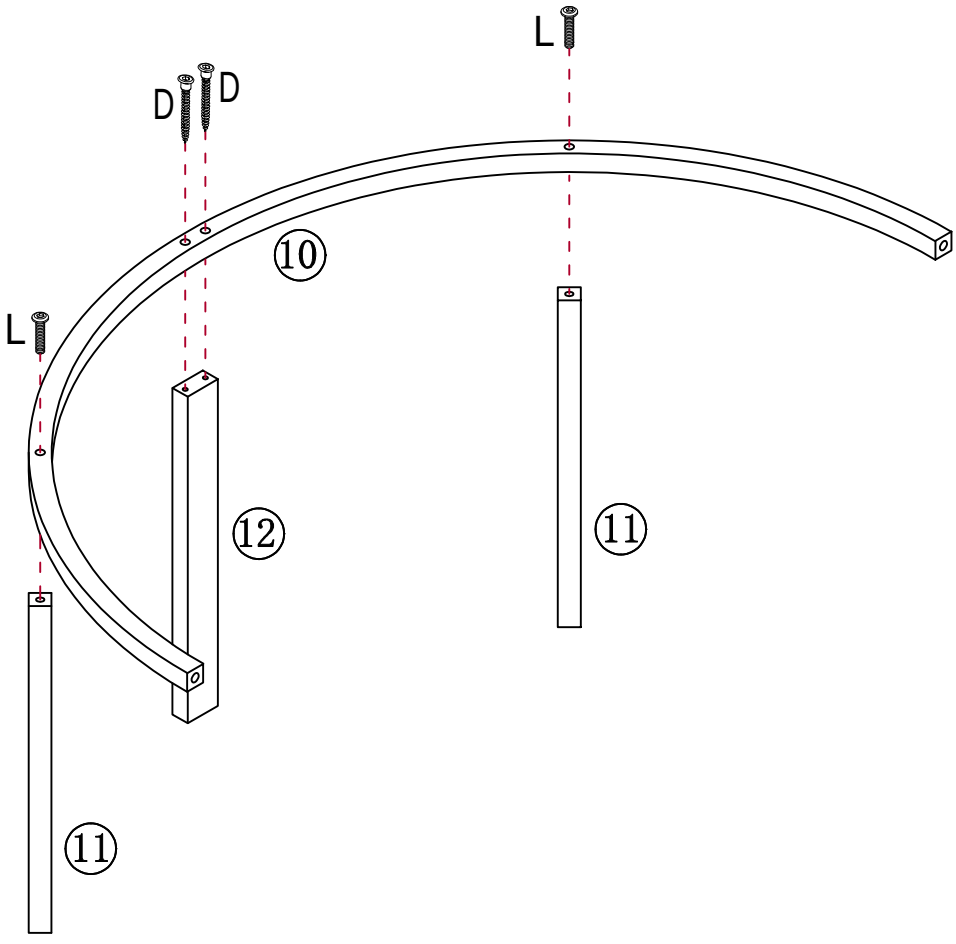

	D*2PCS
	L*2PCS

STEP5

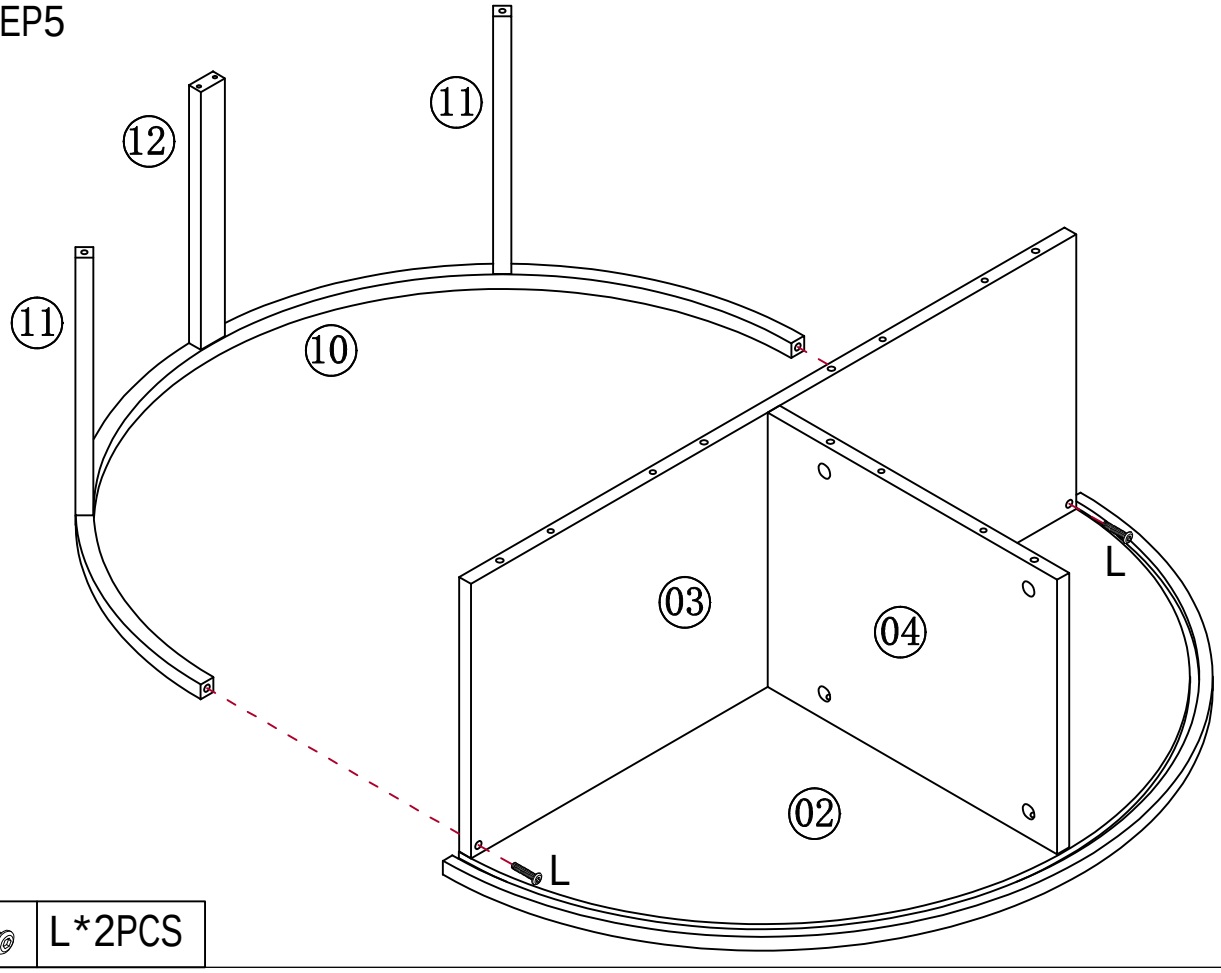

	L*2PCS

STEP6

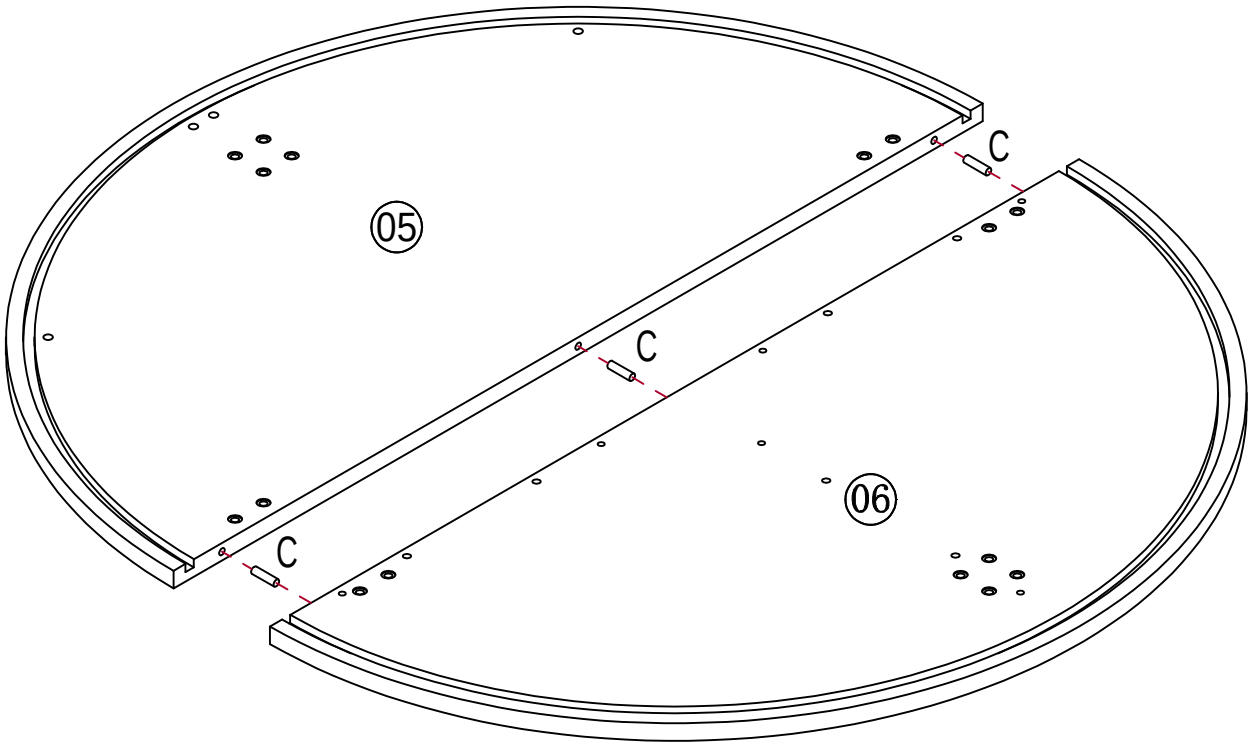

	C*3PCS

STEP7

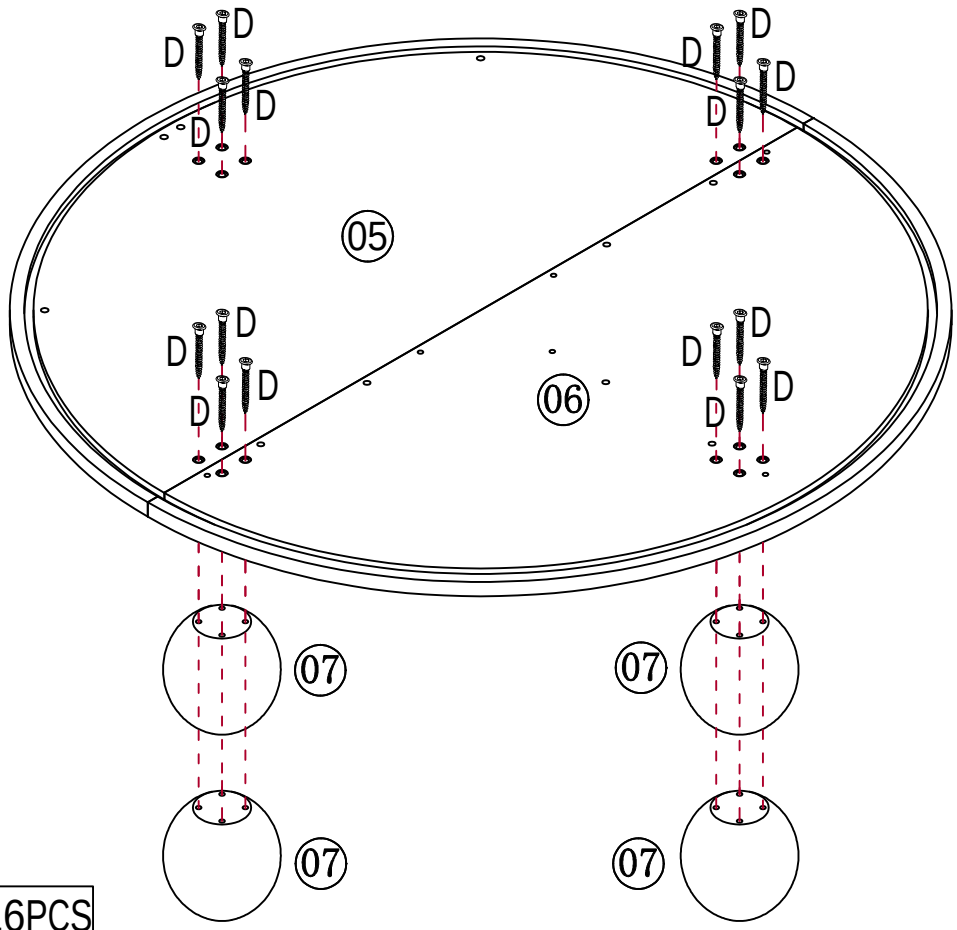

D*16PCS

STEP8

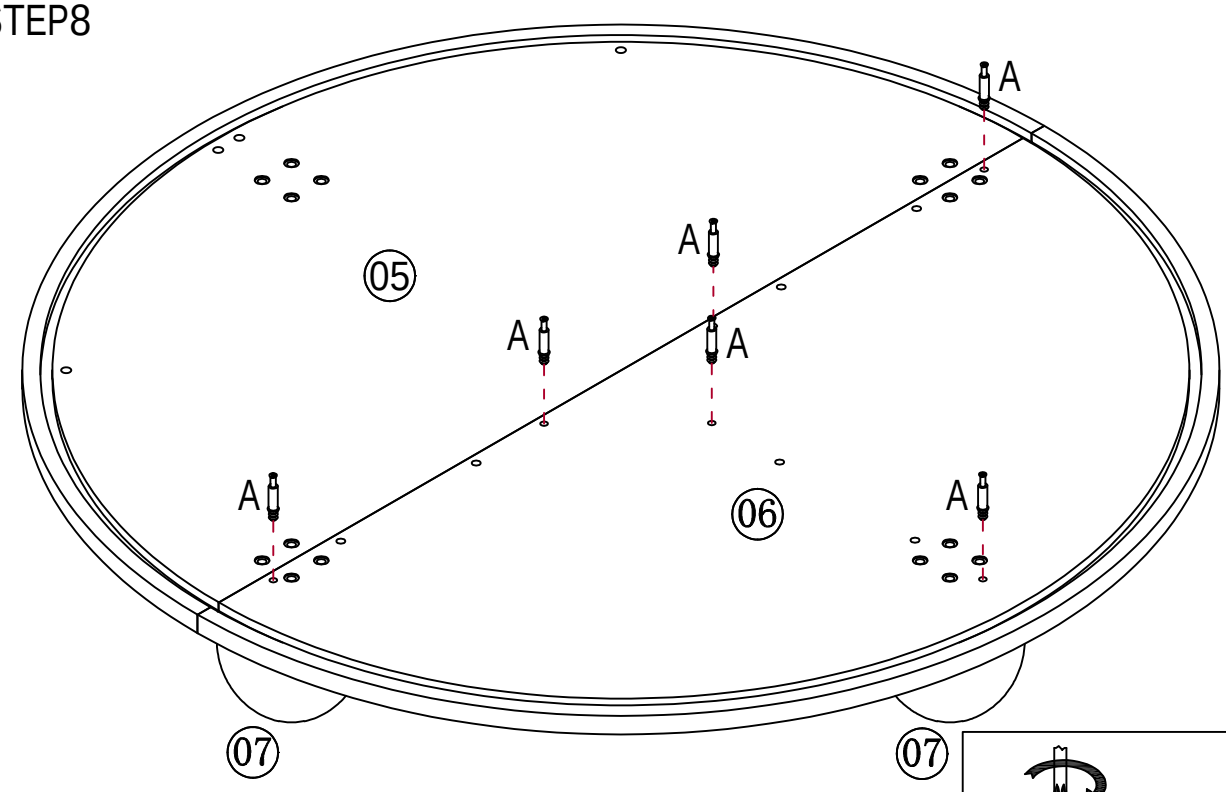

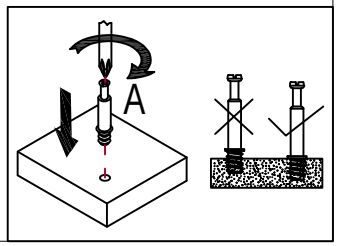

A*6PCS

STEP9

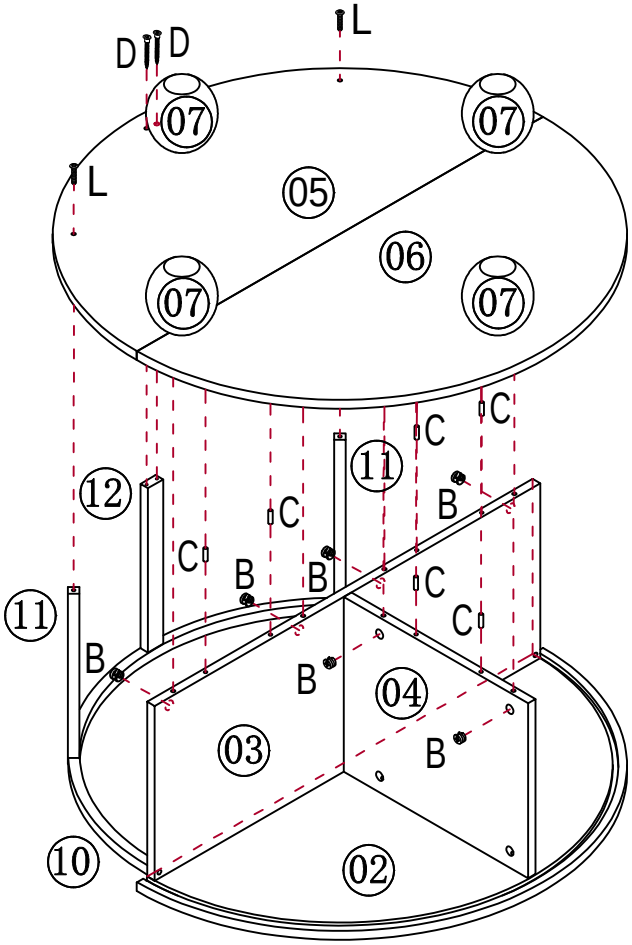

	B*6PCS
	C*6PCS
	D*2PCS
	L*2PCS

STEP10

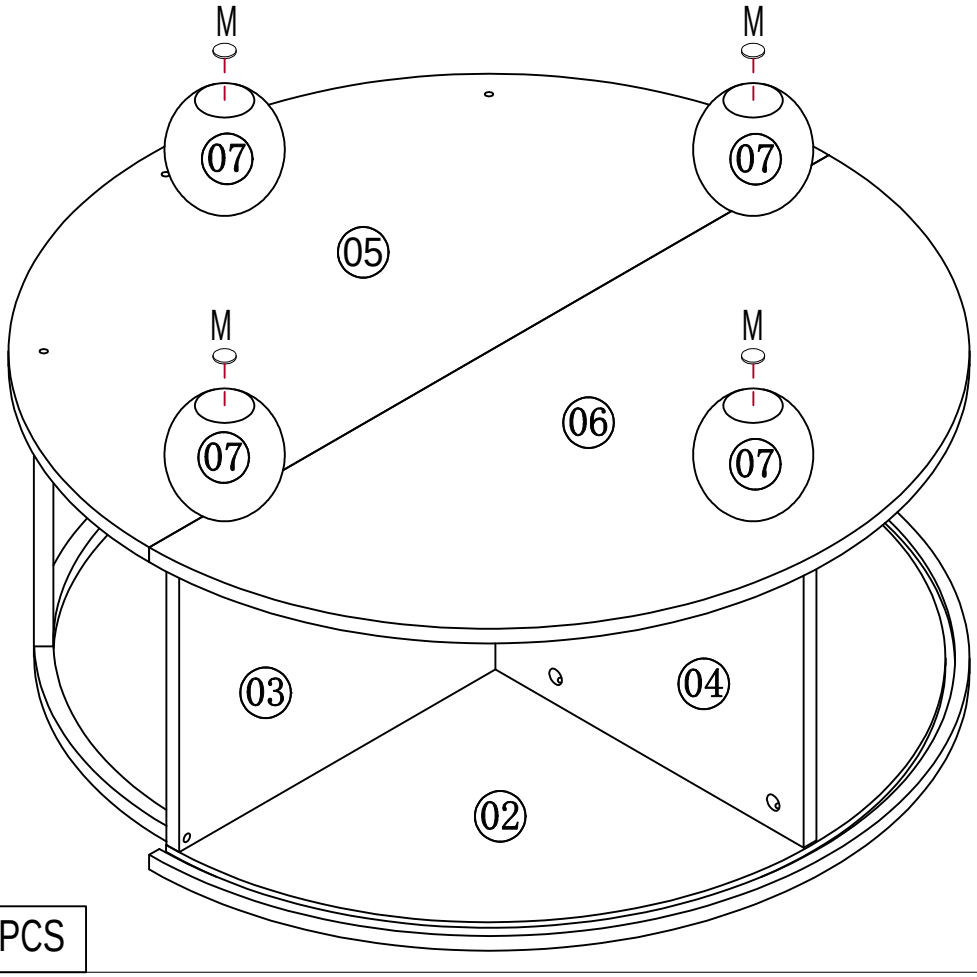

	M*4PCS

STEP11

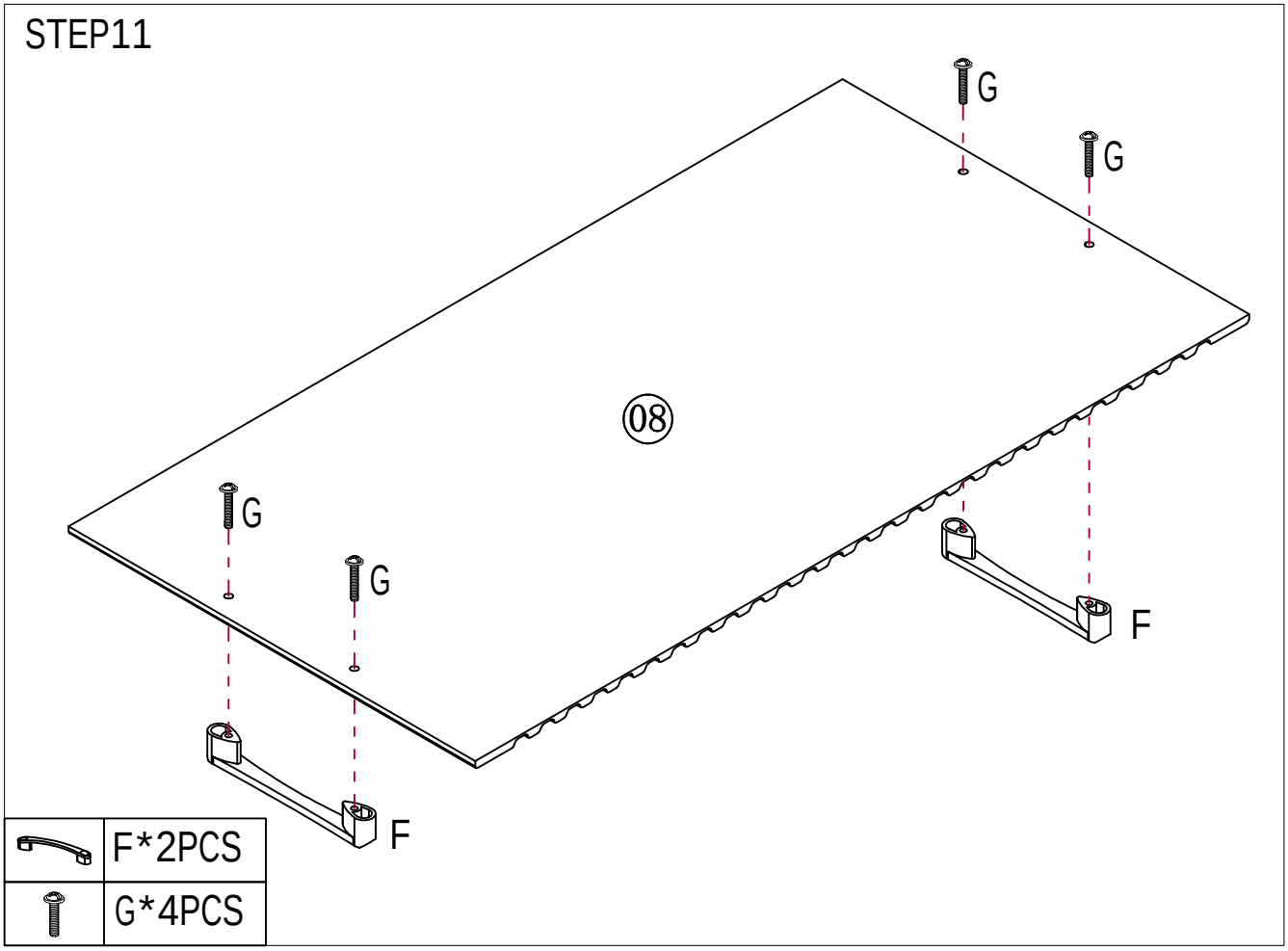

	F*2PCS
	G*4PCS

STEP12

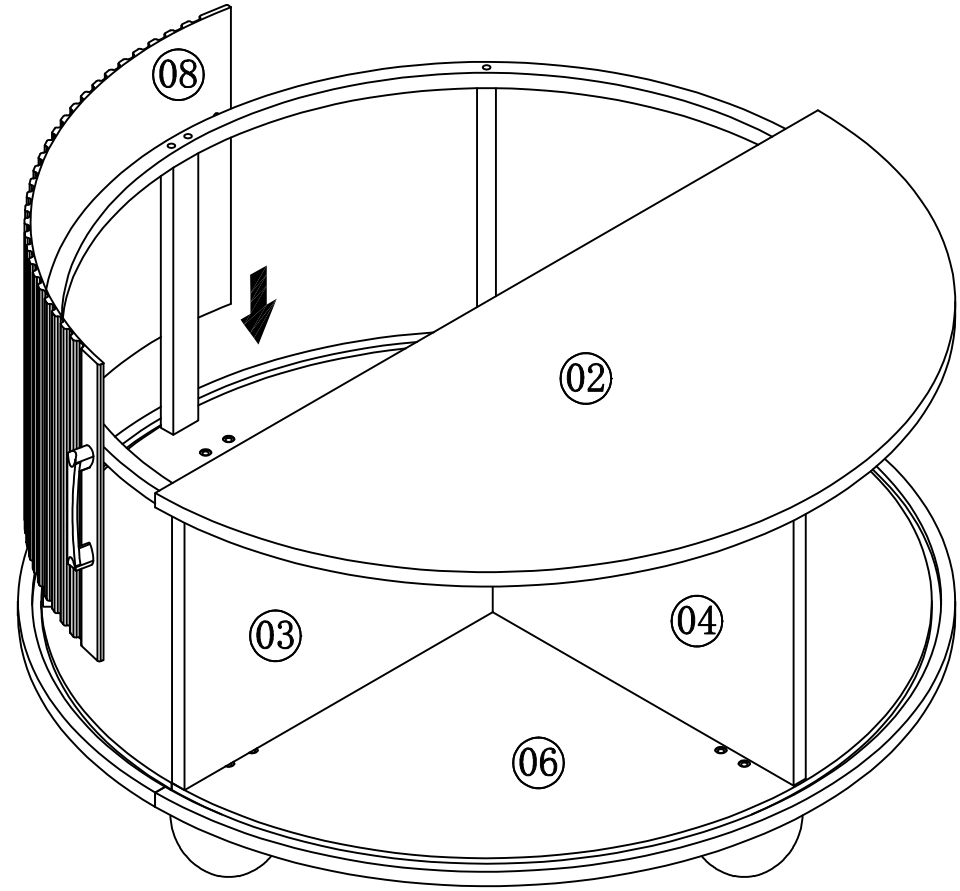

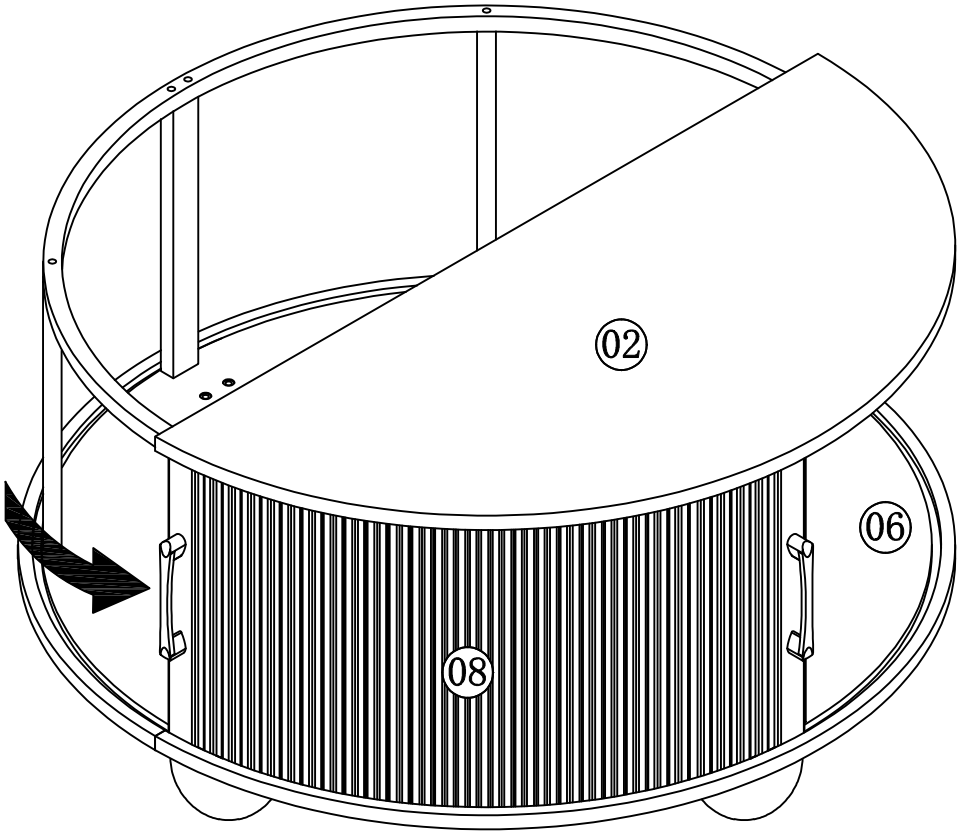

STEP13

The hole is facing upwards and the Velcro is also facing upwards.

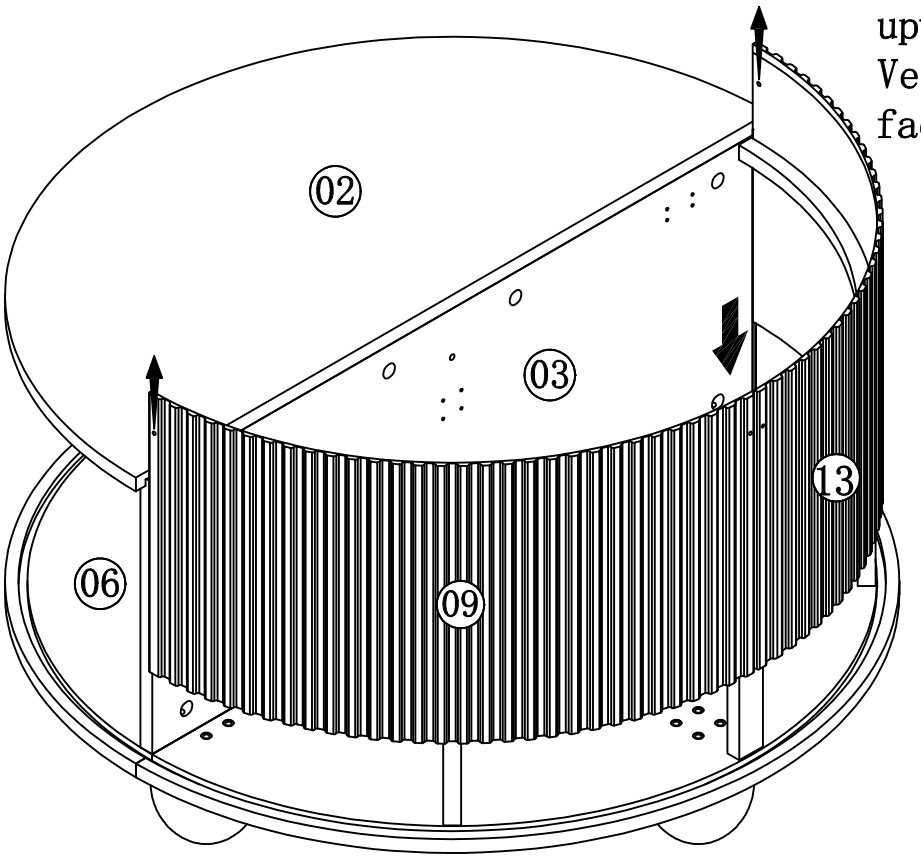

STEP14

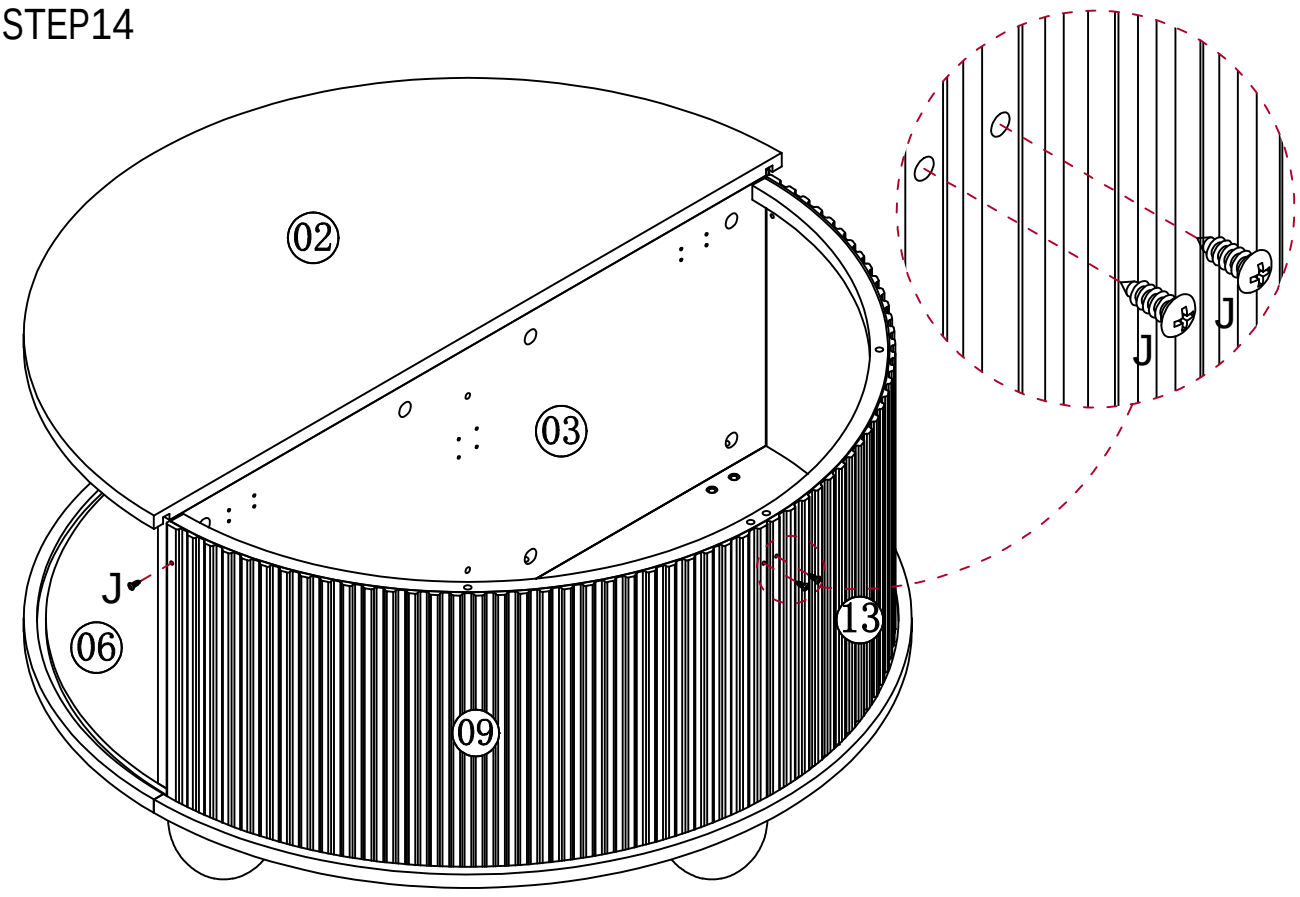

	J*3PCS

STEP15

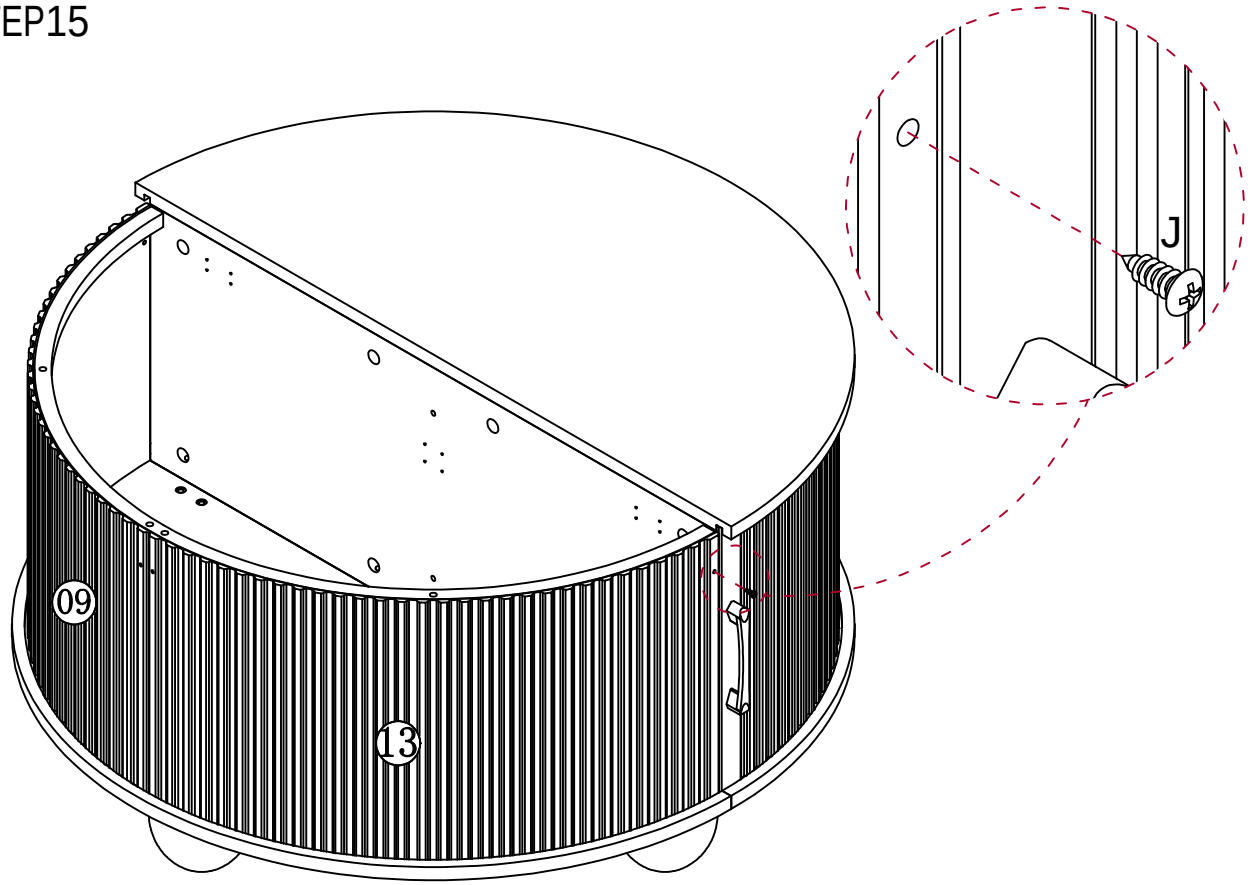

	J*1PC

STEP16

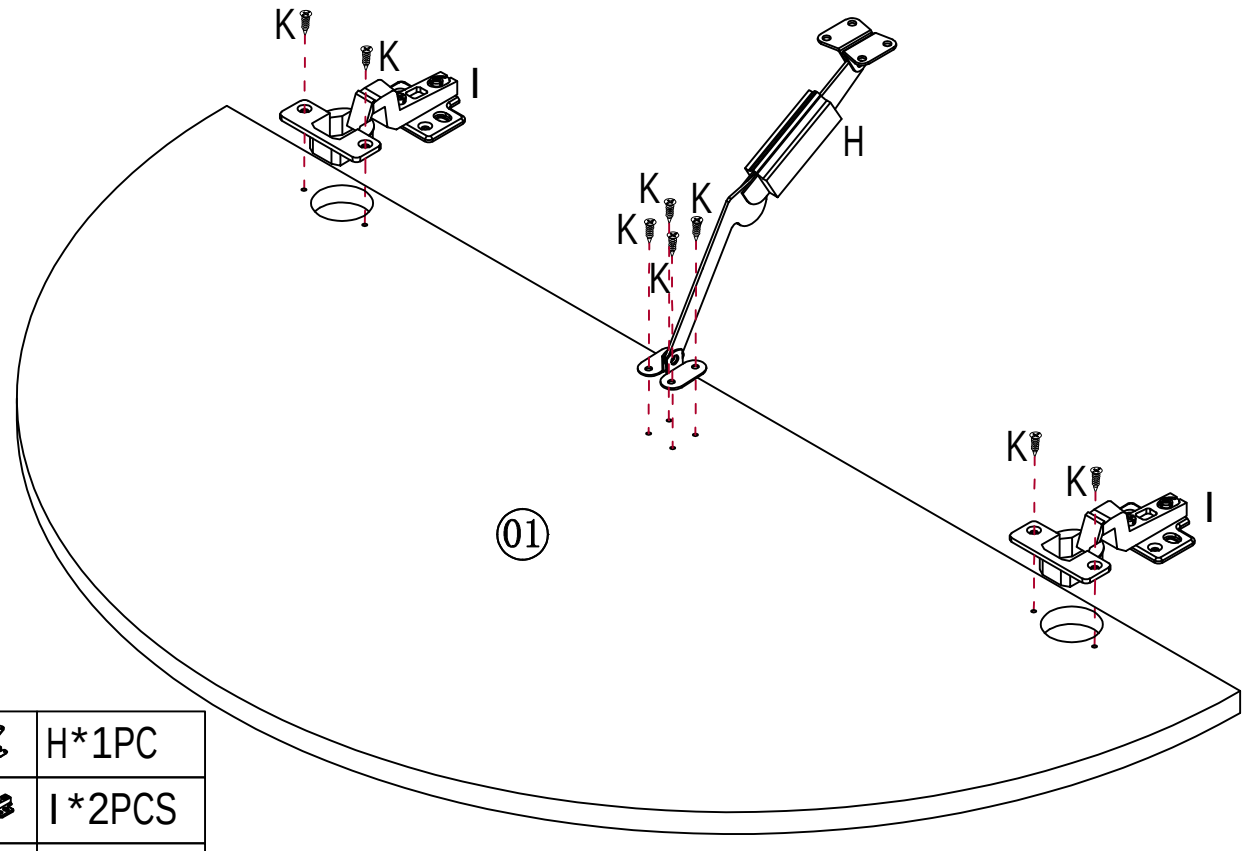

	H*1PC
	I*2PCS
	K*8PCS

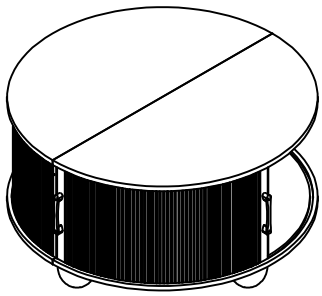

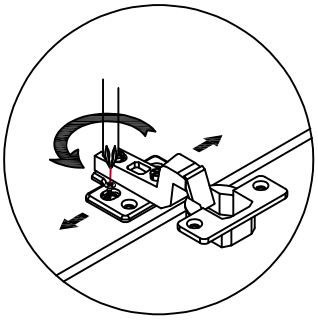

EN: Loosen this screw for left/right adjustment.

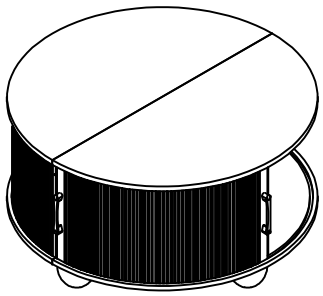

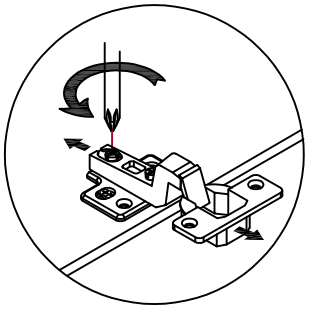

EN:Adjust up and down by loosening this screw.

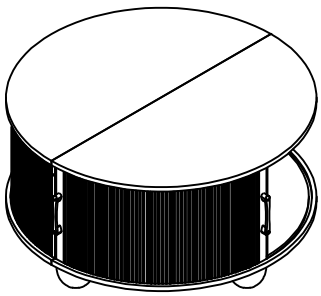

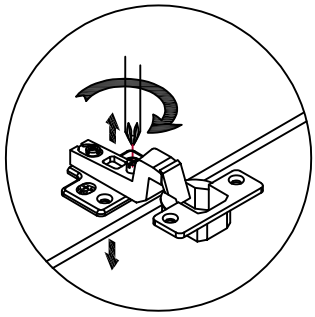

EN:Use this screw for front and back adjustment swheels

STEP17

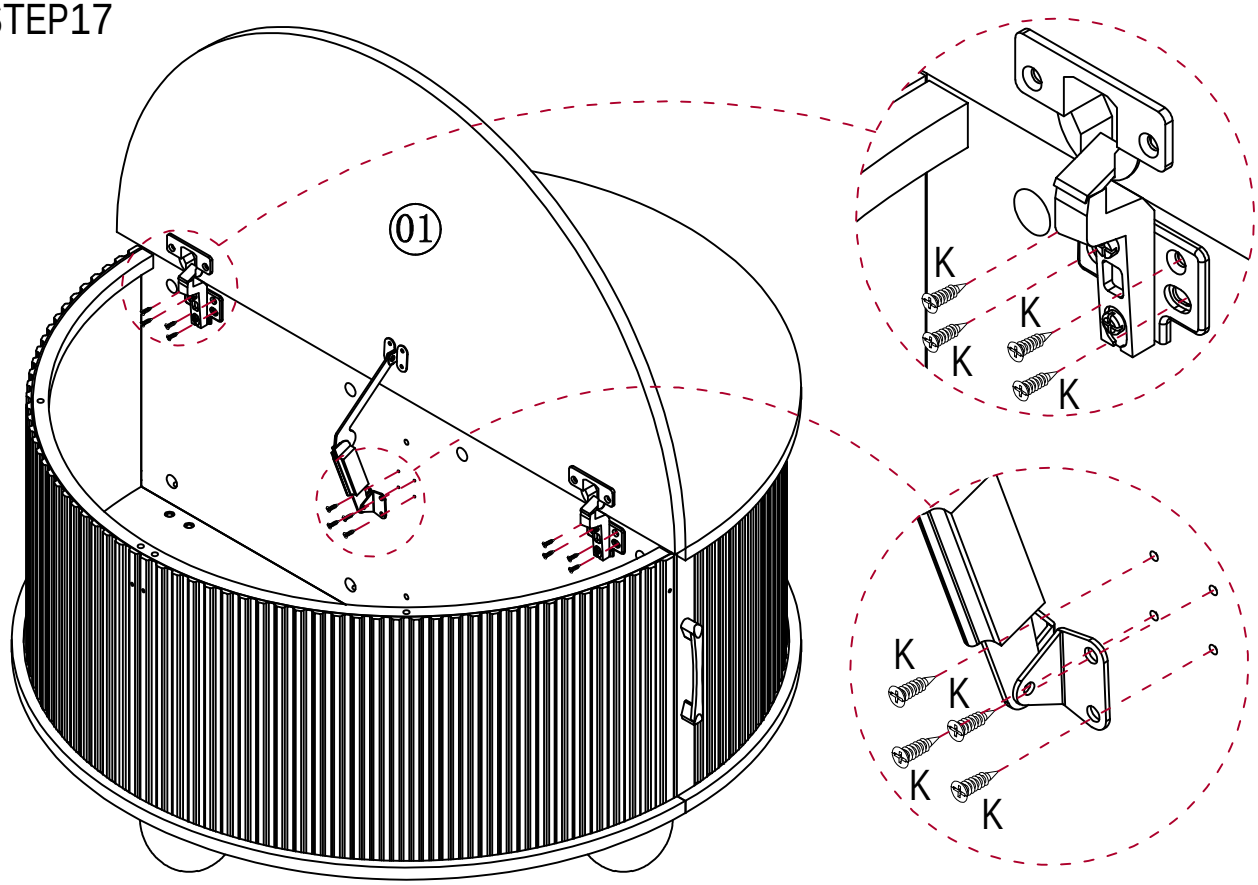

	K*12PCS

STEP18

Pay attention to the drawer corresponding to the number.

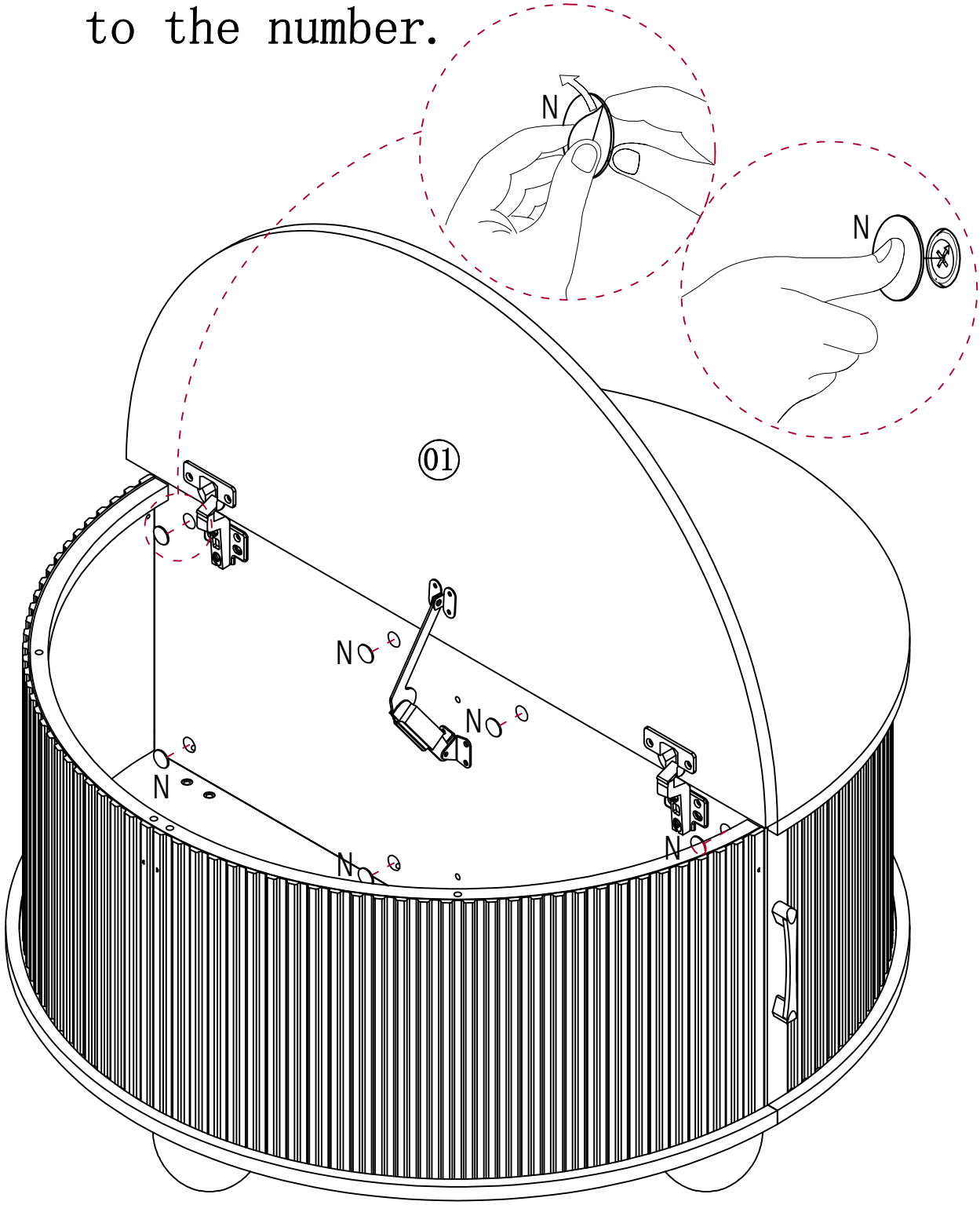

	N*12PCS