Assembly Instructions

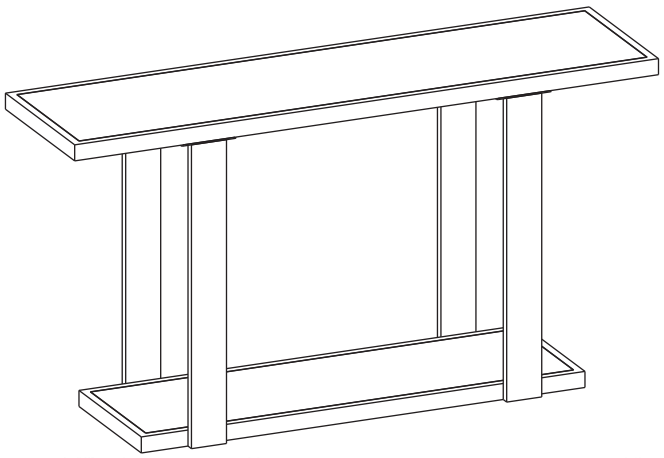

Please install the products on carpet or soft place.

Parts list

No.	Sketch	Description	Qty
A		Top	1
B		Top	1
C	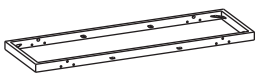	Framework	1
D		Leg	4

Hardware List

No.	Sketch	Description	Qty
E		Screw M6*8	4
F		Screw M6*12	8
G		Screw M6*25	8
H		Adjustable foot	6
I		Screw M4*12	8
J	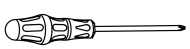	screwdriver	1
K		Allen Key M4	1

Step 1

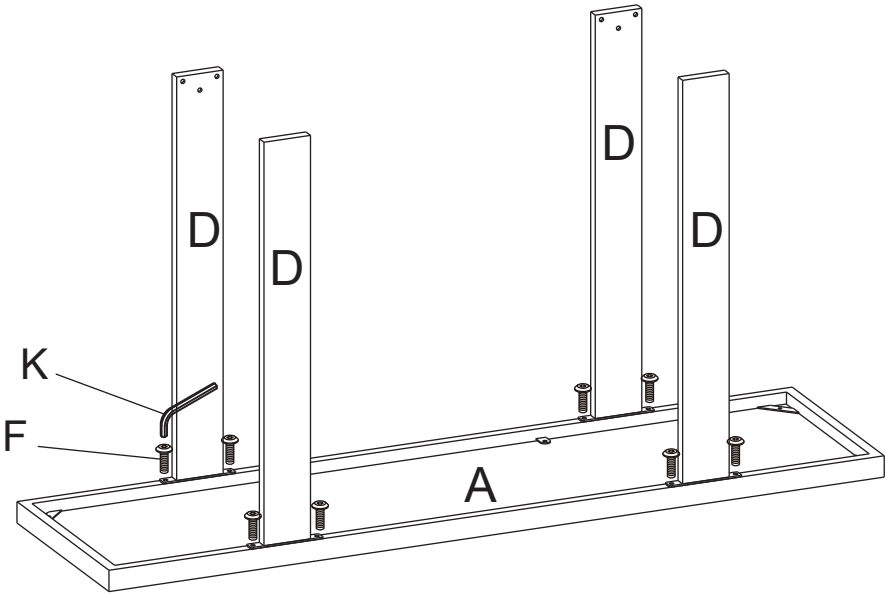

Step 2

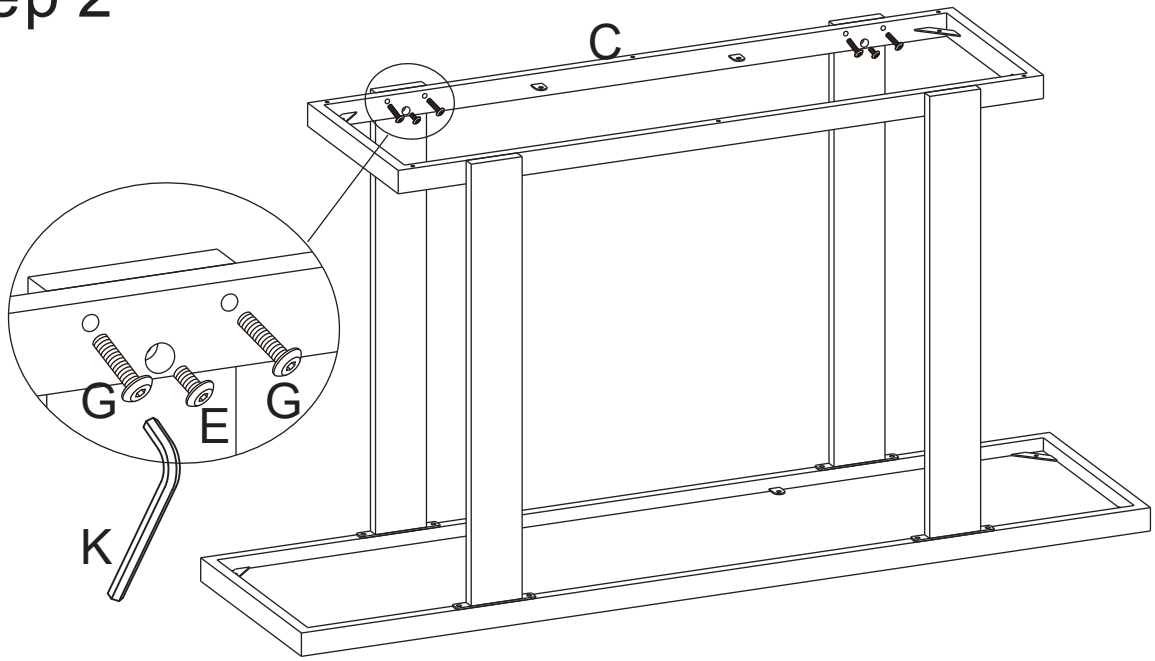

Step 3

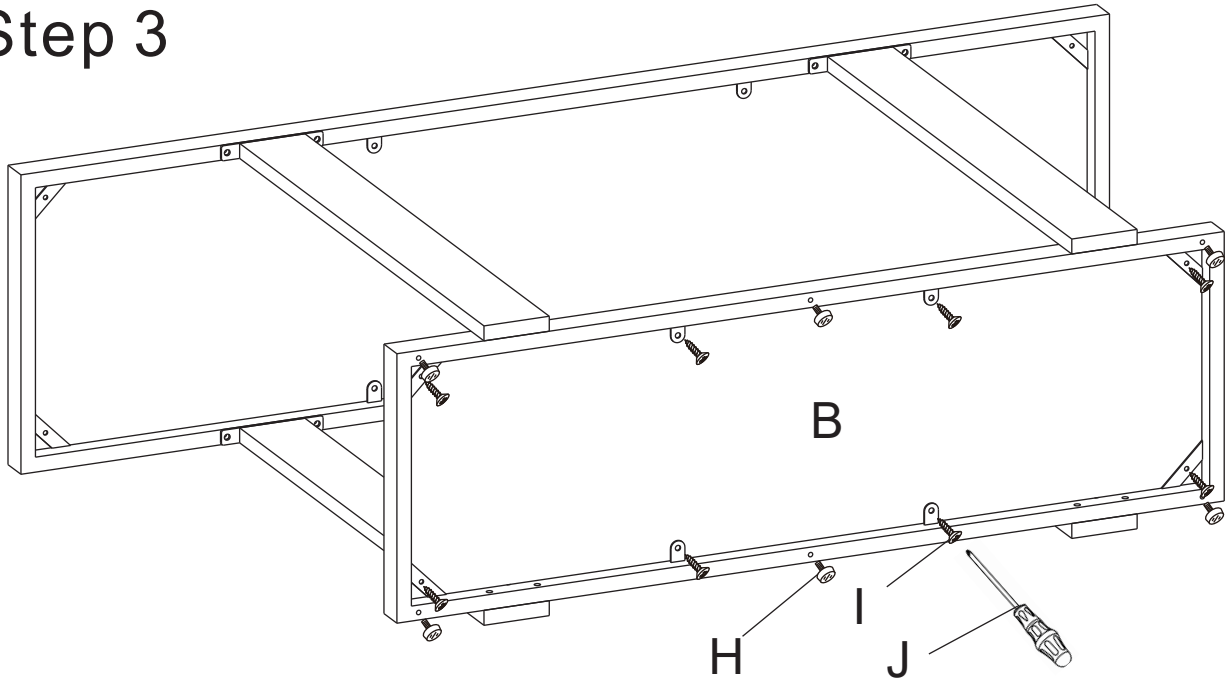

Step 4

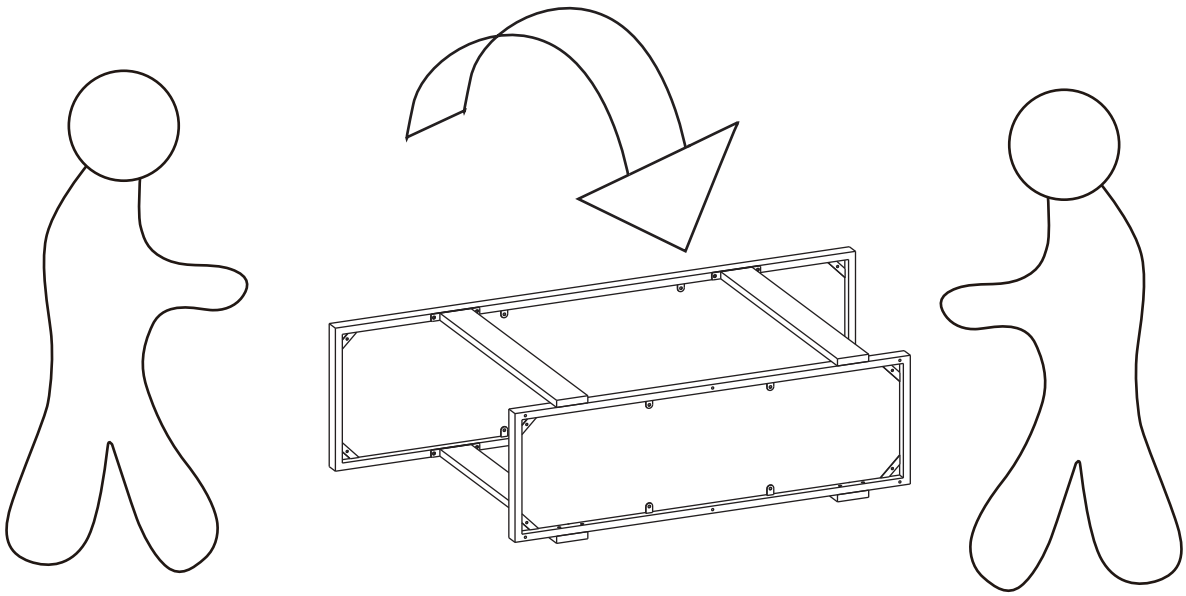

Step 5

