VIA CLOSETS

# Floor-Mounted Closet Section with 1 Hanging Rod, 1 Shelf & 2 Reveal Drawers

Assembly and Installation Guide

# Before You Begin

## Thank You for Your Purchase

Thank you for choosing ViaClosets.com. This guide contains the assembly and installation instructions for your closet system.

## Need Help?

If you have questions during assembly or installation, our team is here to help.

**Call for help: (800) 583-0358**

**Visit: https://viaclosets.com/brand/contact-us**

## Installation Video Library

For additional step-by-step help, visit our Installation Video Library. Scan the QR code below to view available installation videos.

**Scan to view installation videos or visit https://viaclosets.com/brand/installation-videos**

---

Before beginning installation, we recommend reviewing the applicable sections of this guide and watching any installation videos relevant to your product.

# Table of Contents


| | |
|---|---|
| Wall and Suspension Rail Preparation and Mounting | 3 |
| 72 Inch Cabinet Assembly | 13 |
| Bottom Module Installation | 24 |
| Cabinet Mounting | 31 |
| Reveal Drawer Assembly | 36 |
| Drawer Slide Installation | 40 |
| Shelf and Shoe Shelf Installation | 45 |
| Hanging Rod Installation | 47 |

# Wall and Suspension Rail Preparation and Mounting Guide

The wall rail supports the closet system and must be installed level and securely fastened to the wall. Take your time during this step. A properly installed rail makes the rest of the closet installation easier, straighter, and safer.

## Required Tools

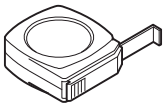

Tape measure

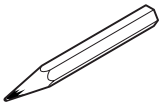

Pencil

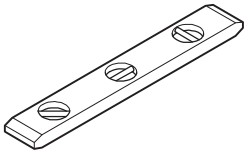

Level

Stud finder

Masking tape

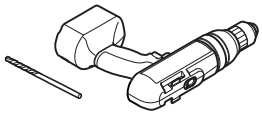

Drill & metal bit

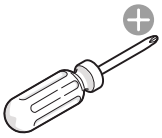

Screwdriver
or impact driver

Hacksaw or miter saw
(metal cutting)

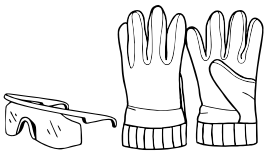

Safety glasses & gloves

## 1 Wall Preparation

- **Identify wall type:** Determine wall type to ensure proper fastening method and anchor selection.

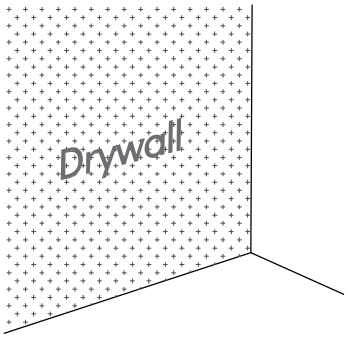


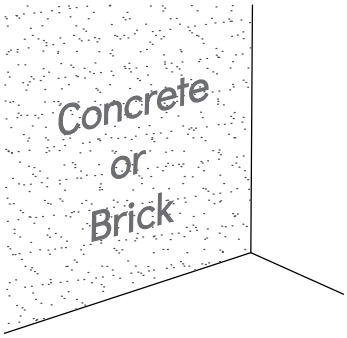

- **Mark height line according to layout plan:** Use tape measure and level to mark rail height line.

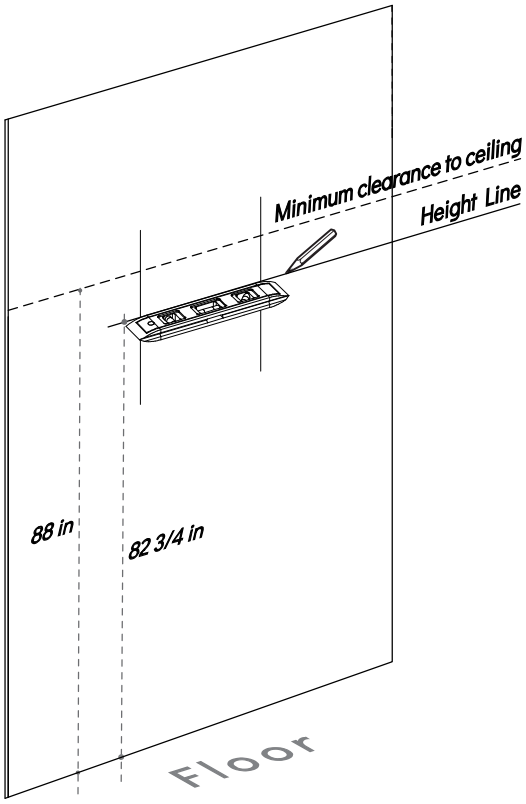


**Important:** Confirm the ceiling height before installing the rail. If the ceiling clearance is less than 88", the closet system may not have enough space to be properly installed.

For Drywall Installation:

- **Locate and mark stud centers:** Use stud finder and pencil to mark stud centers.

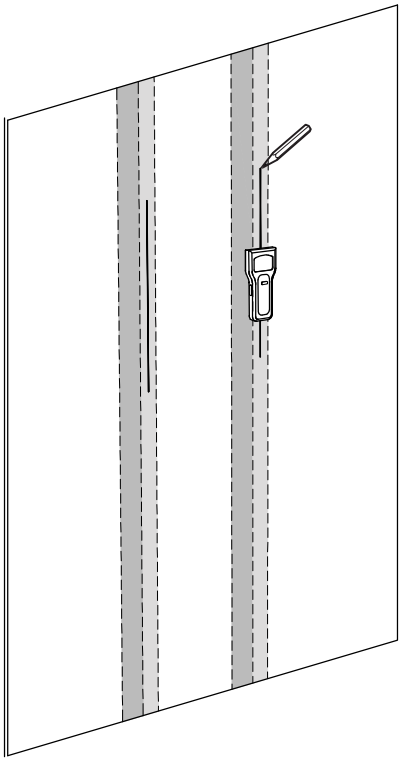

## Rail Preparation

### 2 Determine Required Rail Length

- **Measure total cabinet run:** Measure the full width of the wall section or cabinet layout where the rail will be installed
- **Account for spacing:** Subtract 1/8" (3 mm) total to allow clearance for wall irregularities or corner returns.

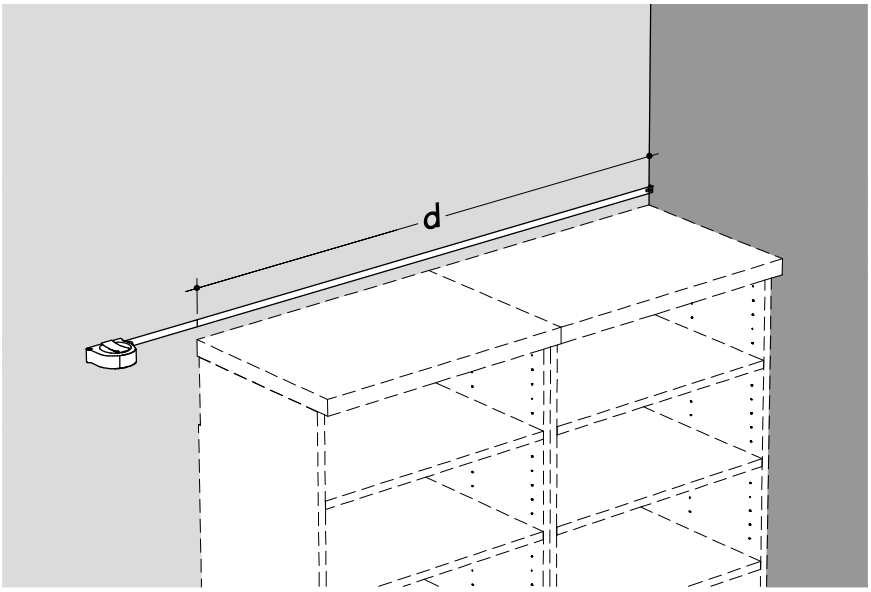


- **Mark cut length:** Transfer the measurement onto the Hettich suspension rail using a pencil or fine marker.

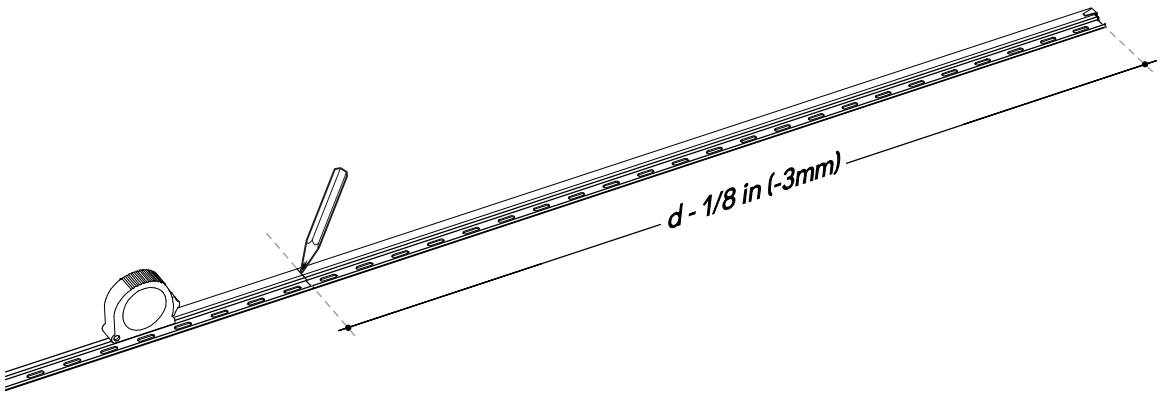

## Rail Preparation

### 3 Cut the Rail

- **Secure for cutting:** Clamp the rail firmly on a workbench with the cut line clear.
- **Cut precisely:** Use a fine-tooth metal saw to ensure a clean edge.
- **Deburr edges:** Smooth all cut edges with a file or deburring tool to prevent sharp edges and ensure proper bracket engagement.

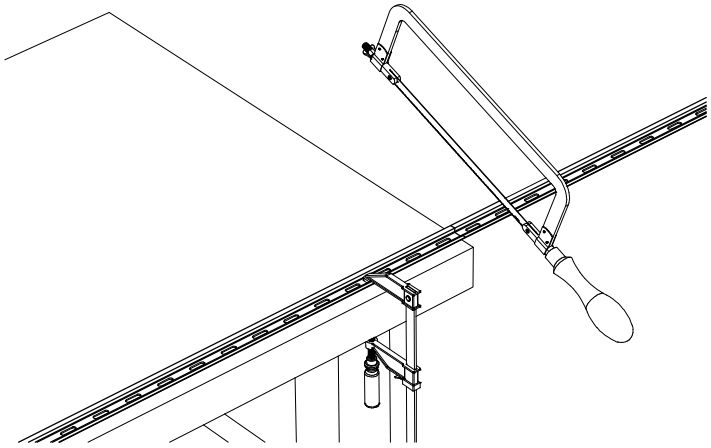

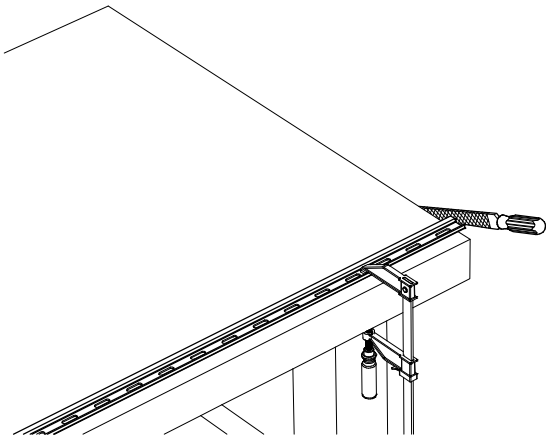

### 4 Prepare Mounting Holes

- **Check hole spacing:** Hold the rail against the wall, Confirm that pre-drilled holes in the rail align with stud layout. If not, mark new positions.
- **Drill additional holes (if needed):** Use a 5 mm metal bit to create new holes centered in the upper groove.
  Maintain 16" (406 mm) spacing between holes where possible.
  This will help determine where the rail can be fastened directly into studs and where toggle anchors may be required.

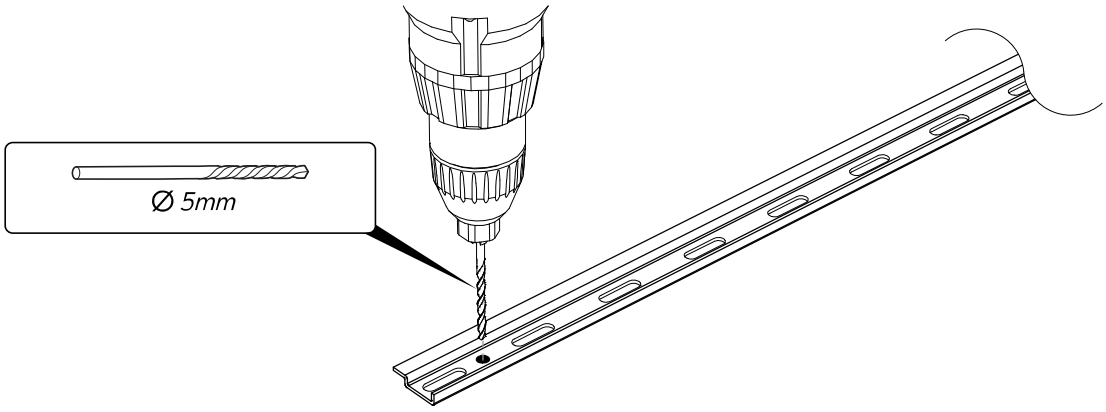

## Rail Preparation

### 5 Join Multiple Rails (if required)

- **Plan joint locations:** Place joints directly over a stud whenever possible for maximum strength

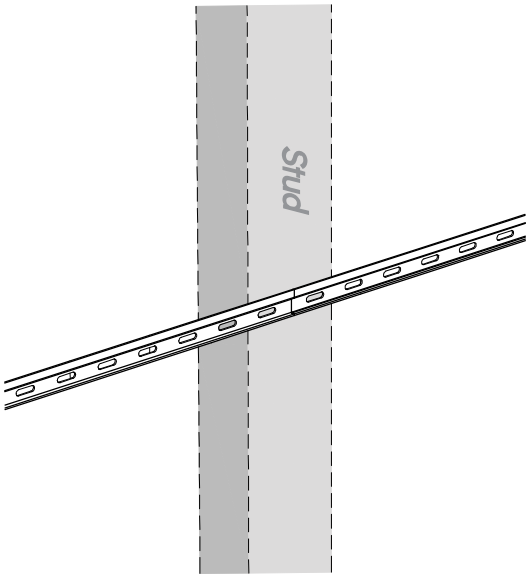


- **Align rails:** Butt adjoining rails tightly together; ensure groove and top edge alignment.

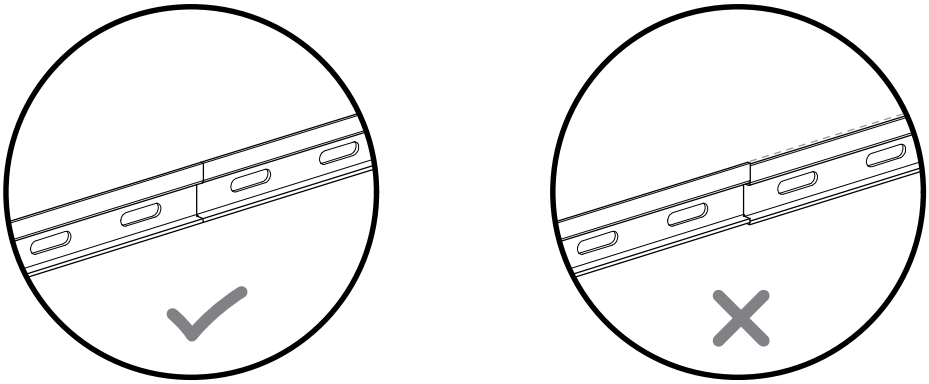

- **Secure each rail section independently:** Fasten every rail section directly to the wall. Do not rely on adjacent sections for support. Secure both ends of each rail section. Use toggle anchors where studs are not available.

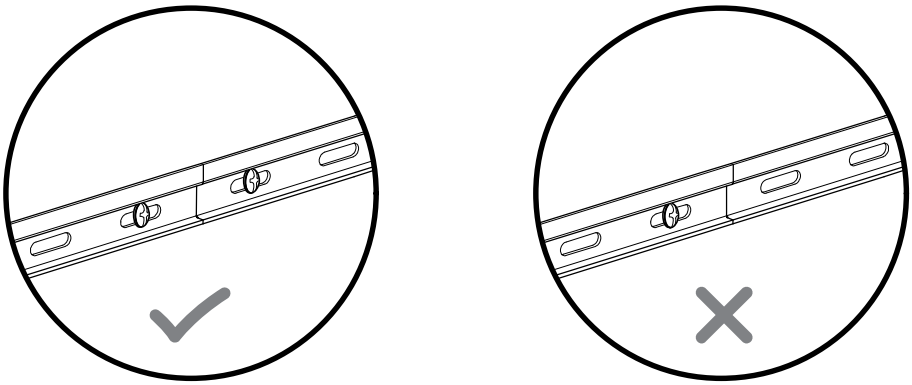

## Rail Mounting

### 6 Determine Where Toggle Anchors Are Needed

Toggle anchors are used when additional support is needed and a stud is not available in the proper location.

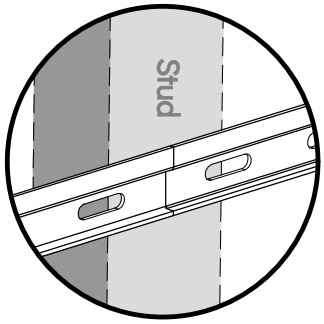


*Toggles not needed*

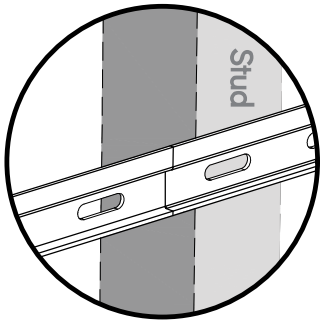


*Toggles needed*

Use toggle anchors in the following situations:

- **A vertical panel location is more than 3" away from the nearest stud.**

If the vertical panel does not land close enough to a stud, install a toggle anchor near that vertical panel location for added support.

- **The end of the rail is too far from the nearest stud.**

If the rail end extends several inches past the last available stud, install a toggle anchor near the end of the rail.

- **Two rail sections meet together.**

If the closet run requires more than one rail section, butt the adjoining rails tightly together and make sure the grooves and top edges are aligned. The rail joint/seam must be properly supported. If a stud is not available near the seam or rail ends, install toggle anchors for additional support.

### 7 Temporarily Attach the Rail

- Locate a stud near the center of the rail.
- Position the rail along the height line with the notched side facing up, then loosely secure one screw into a stud.

Do not fully tighten the screw yet. The rail should be held in place but still able to pivot slightly.
This allows you to confirm alignment and mark any toggle anchor locations accurately

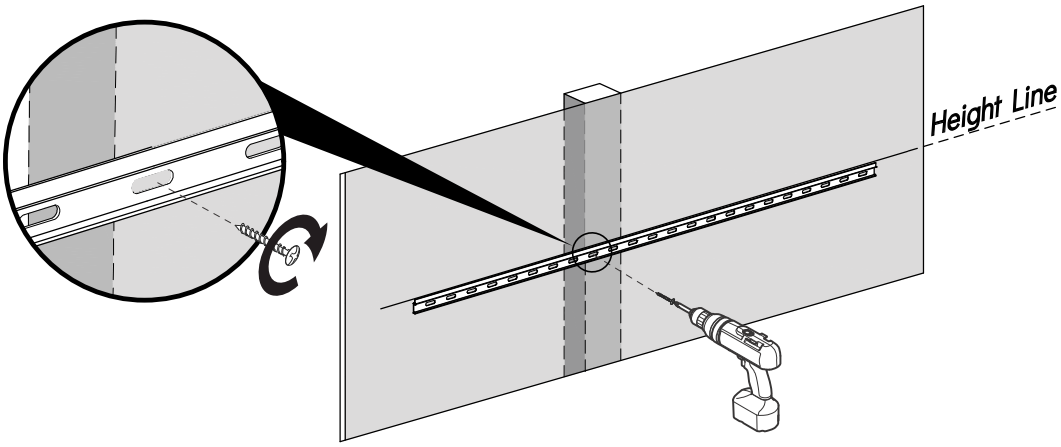

## Rail Mounting

### 8 Mark Toggle Anchor Locations

With the rail temporarily held in place, align the top of the rail with the level reference line.
At each location where a toggle anchor is needed, mark the wall through the appropriate rail hole.
If your closet run requires two rail sections, repeat the same process for the second rail.

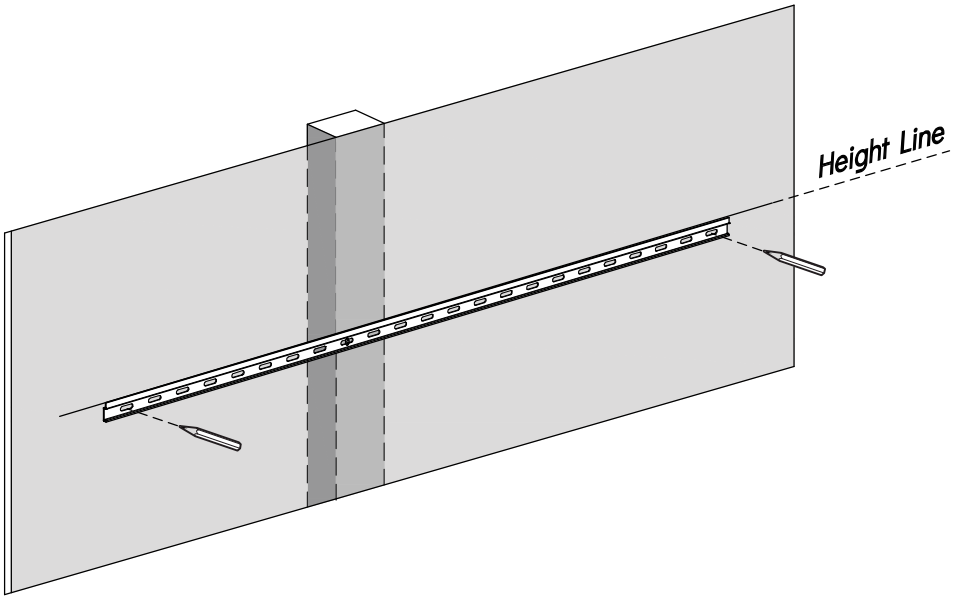


### 9 Install the Toggle Anchors

Remove or pivot the rail out of the way so the toggle anchor marks are accessible.

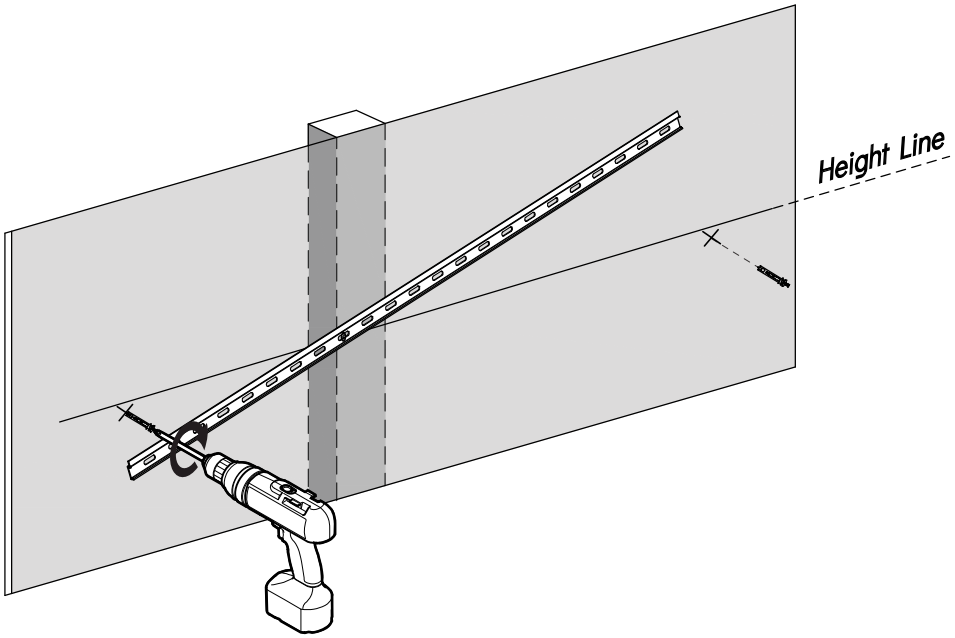

## Rail Mounting

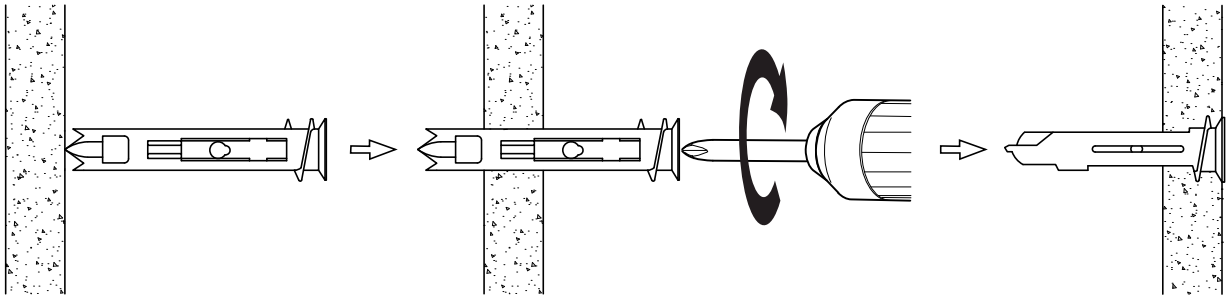

Place the tip of the toggle anchor on the wall at the marked location. Apply light pressure to create a starting point.

Using a drill at low speed, drive the toggle anchor into the drywall until it sits flush with the wall surface.

As the anchor breaks through the drywall, continue driving it until the threads engage and the anchor pulls securely into place.
Do not overtighten the toggle anchor.

### 10 Secure the Rail to the Toggle Anchors

Carefully move the rail back into position and align the rail holes with the installed toggle anchors.

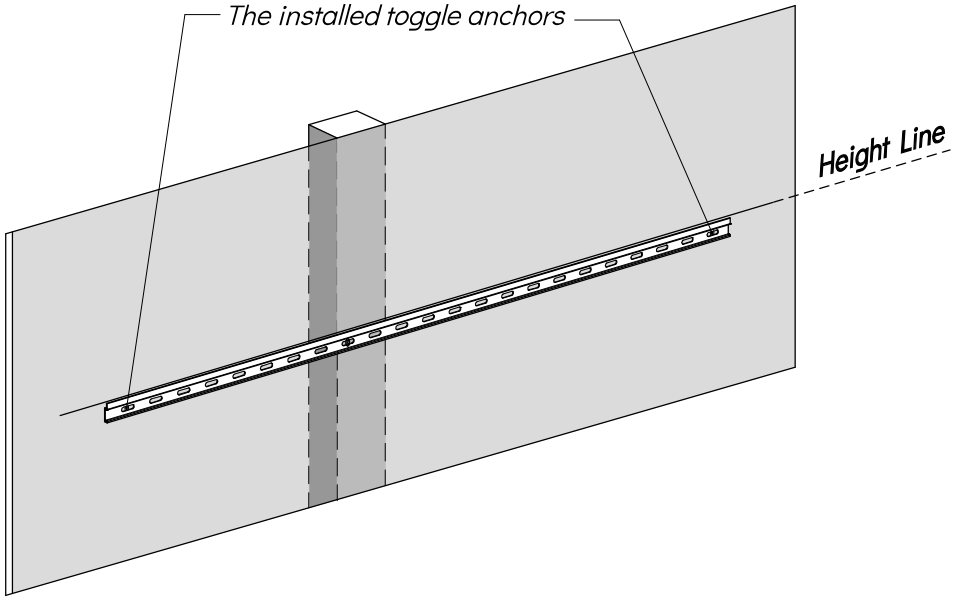

## Rail Mounting

Insert the toggle screw through the rail and into the toggle anchor.
Begin tightening the screw slowly. As the screw engages, the toggle mechanism behind the drywall will open and pull tight against the back of the wall.
Tighten until the rail is secure.

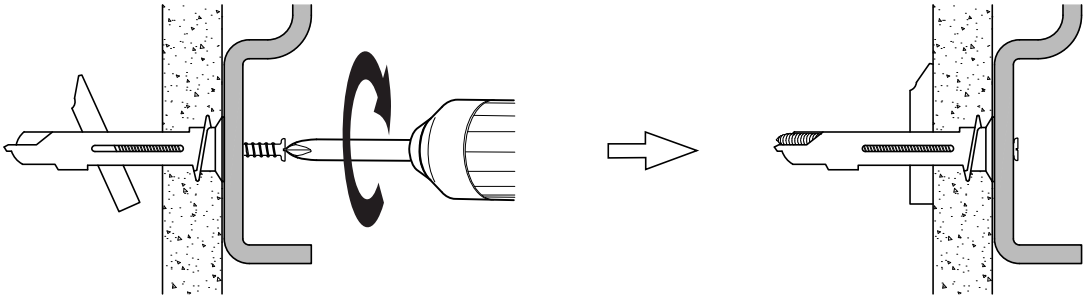

**Important:**
Once you feel firm resistance, stop tightening. Do not overtighten, as this may damage the drywall or anchor.

### 11 Secure the Rail into the Studs

Fasten the rail into each stud along the full length of the closet run using the provided rail screws.
Use **two screws per stud** whenever possible.
If needed, one screw may be driven at a slight angle to allow two screws to catch the same stud.
Make sure the rail remains aligned with the level reference line as you secure it.

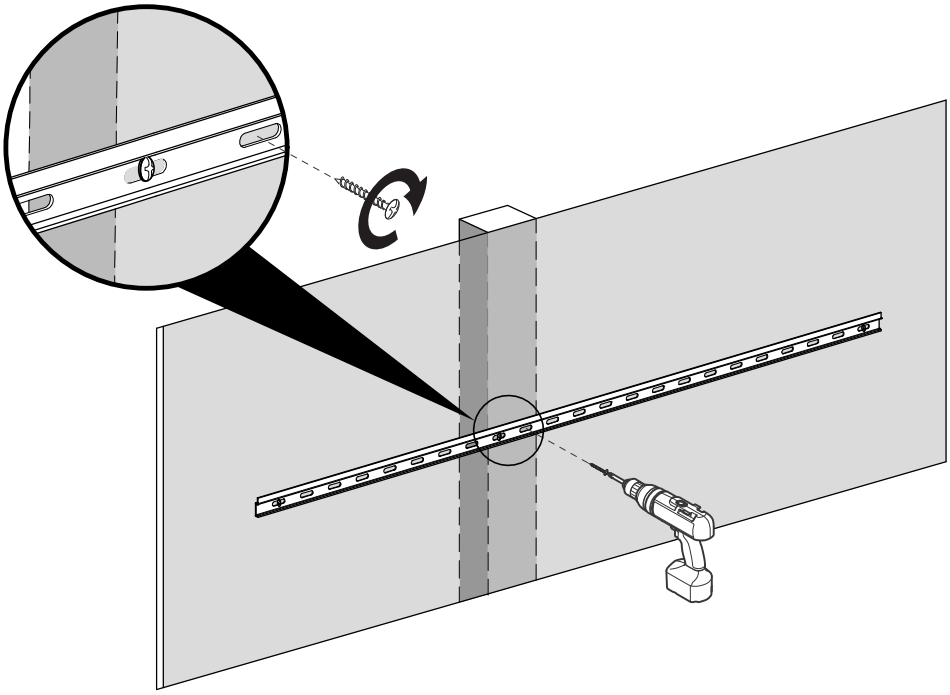

# Rail Mounting

## 12 Final Check

Confirm that:

- The rail is level across the full closet run.
- The rail is secured into studs wherever possible.
- Toggle anchors are installed where additional support is needed.
- Rail seams or rail ends are properly supported.
- All screws are snug but not overtightened.

Once complete, the rail installation is finished, and the closet system is ready for the next installation step.

# CARCASS ASSEMBLY

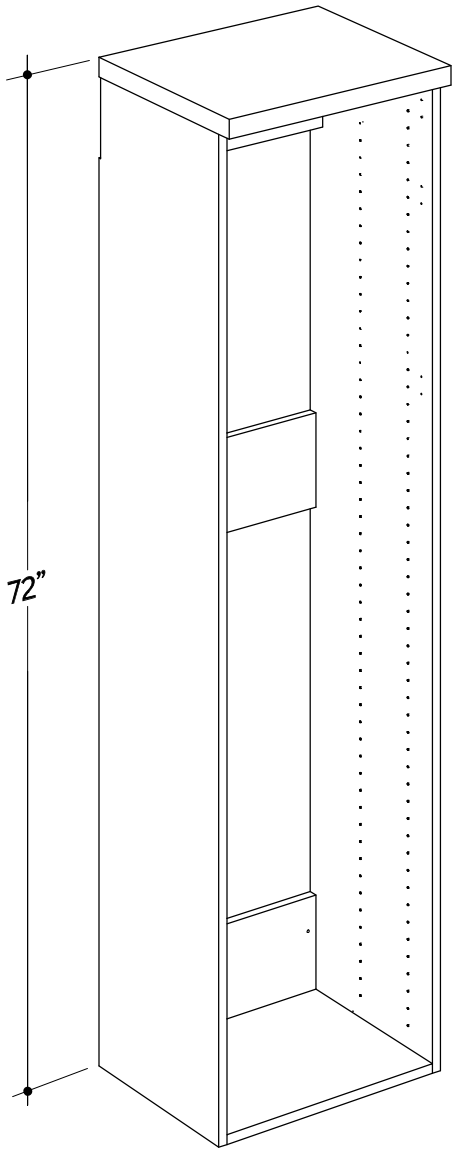


**General Assembly Guidelines:**

- Two person team is required for all module assemblies
- Always align components carefully—seat all Locking pins fully into the oval openings before sliding to lock.
- Use light pressure initially to guide parts into place, followed by firm pressing or tapping.
- Check for flush alignment at each connection point to maintain precision and stability.
- If resistance is felt, do not force components. Realign, and try again to avoid damage.

Handle the assembled carcass with care—while dimensionally stable, the structure is not fully engaged until mounted on the rail and anchored below.

## Preparation Steps

- Lay a soft cloth or protective blanket over your work surface to prevent damage to the panels.
- Select and set aside the Vertical Panel set that matches your module height and configuration.

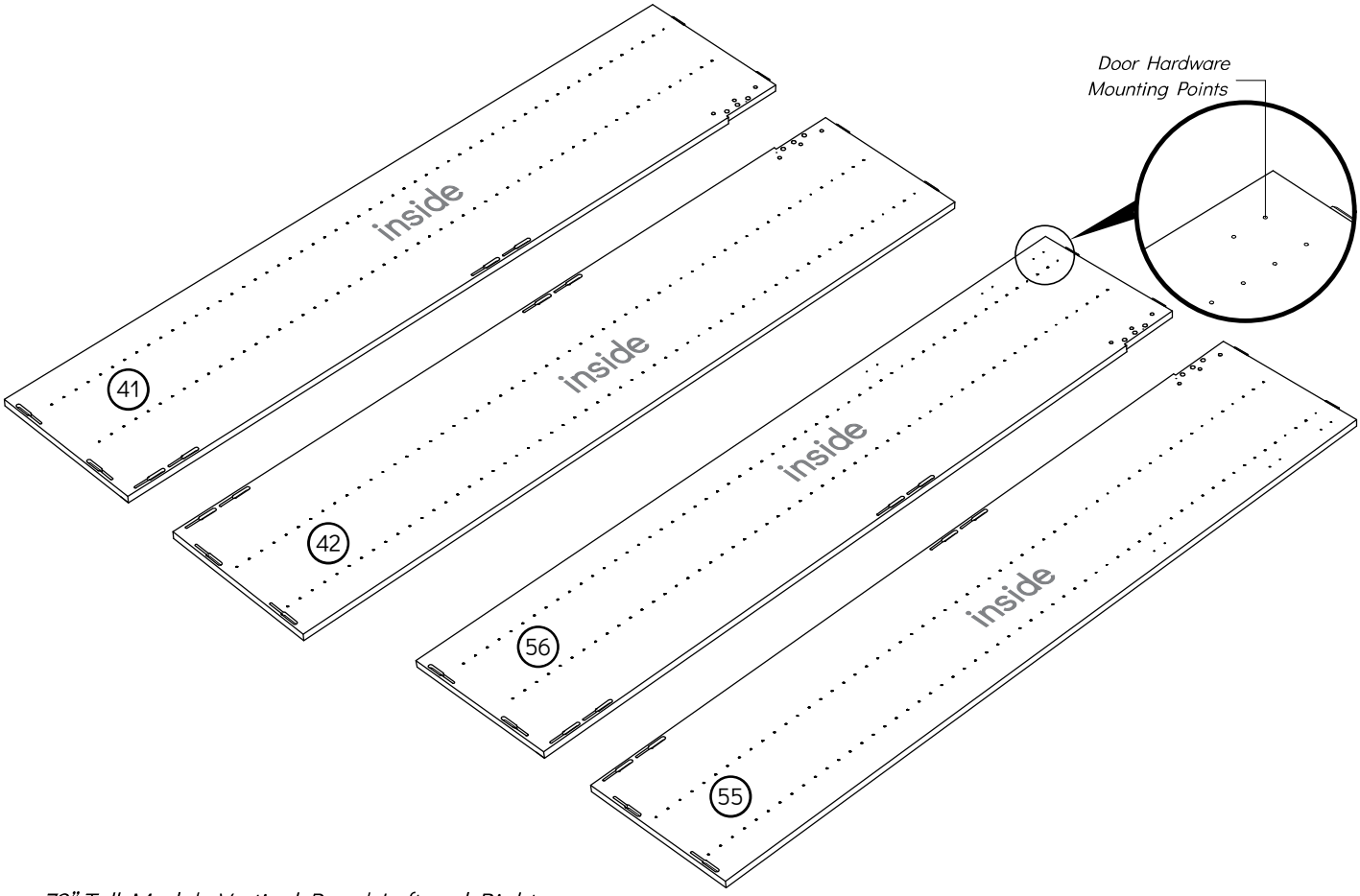


*72" Tall Module Vertical Panel Left and Right*

- Stage the following components within easy reach:

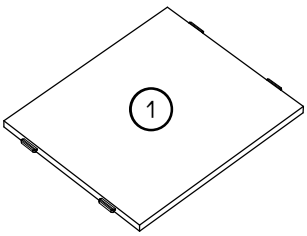


Bottom Panel

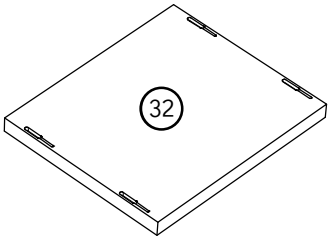


Top Panel

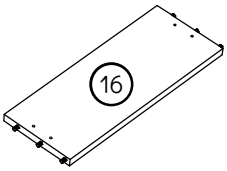


Top Nailer Panel

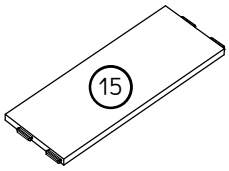


Middle Nailer Panel

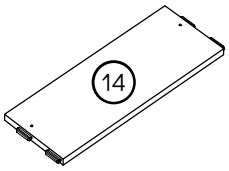


Bottom Nailer Panel

- Verify all parts are of the correct width and finish.

## Carcass Assembly

### 1 Attach Bottom Panel

- Place the first Vertical Side Panel on a clean, flat surface with the inside face up and the front edge toward you.
- Position the (1) Bottom Panel at the bottom of the vertical panel.
- Align all Locking pins on the (1) Bottom Panel with the matching keyhole slots in the vertical.

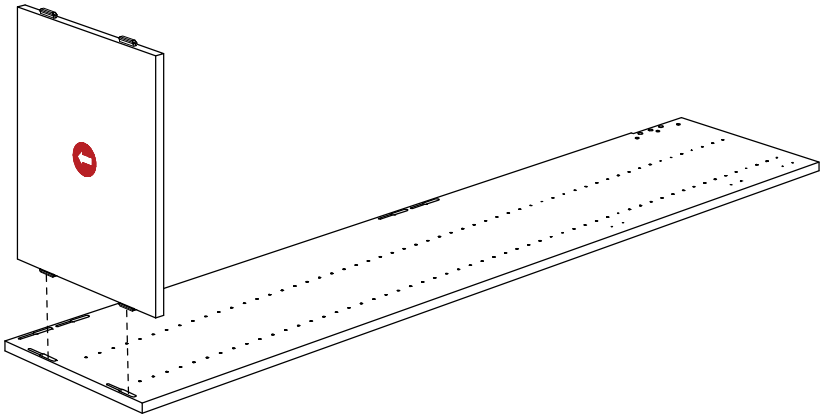

*The red arrow sticker on the back identifies the Locking pins slide-to-lock direction for Bottom Panel.*

- Press the (1) Bottom Panel straight down so all pins enter the oval openings of the slots.

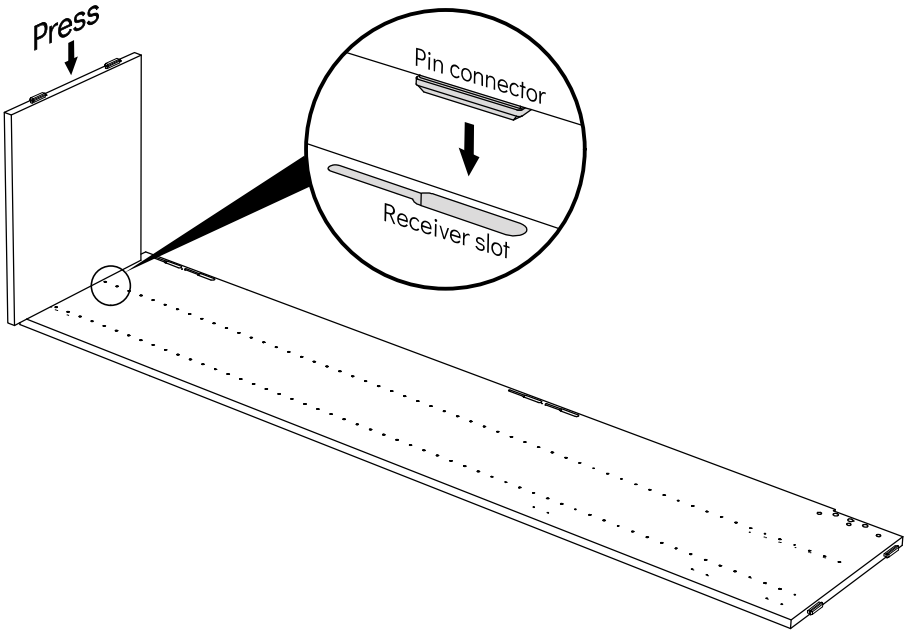


Leave this connection loose - slide only enough to hold the panel upright (do not lock yet).

## Carcass Assembly

### 2 Attach Bottom Nailer Panel

- Position the (14) Bottom Nailer Panel at the rear, near the bottom of the same Vertical Side Panel.
- Align the Locking pins on the (14) Bottom Nailer Panel with the corresponding keyhole slots in the vertical.

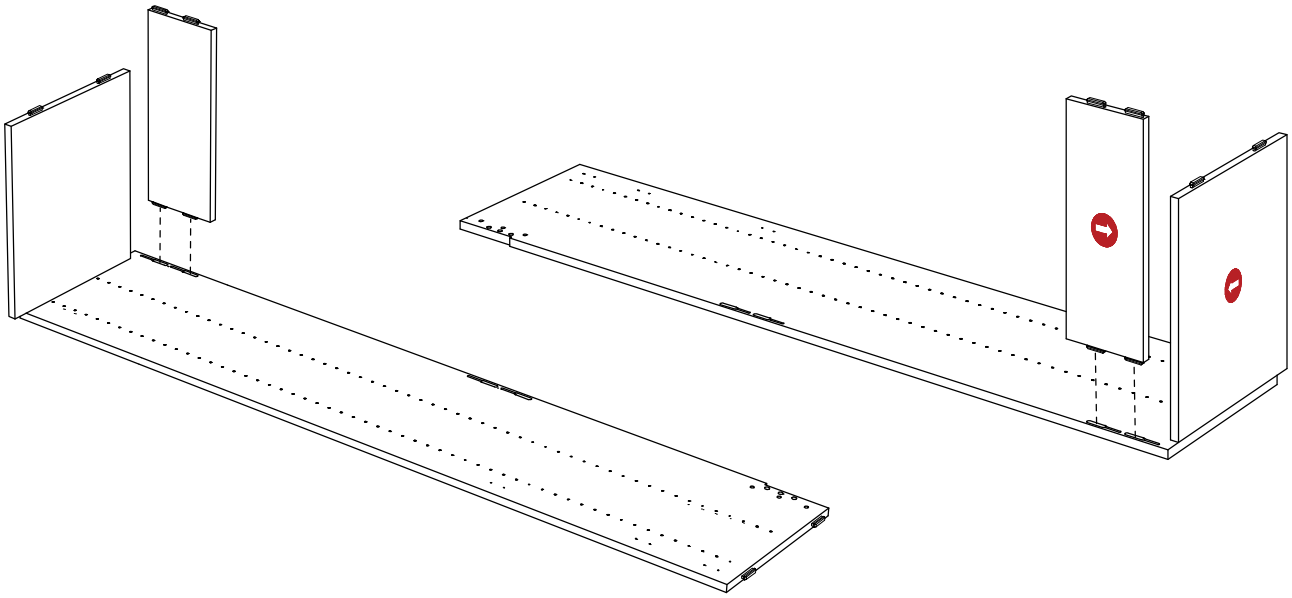

*The red arrow sticker on the back identifies the Locking pins slide-to-lock direction for Bottom Nailer Panel.*

- Press the (14) Bottom Nailer Panel straight down so all pins enter the slots.

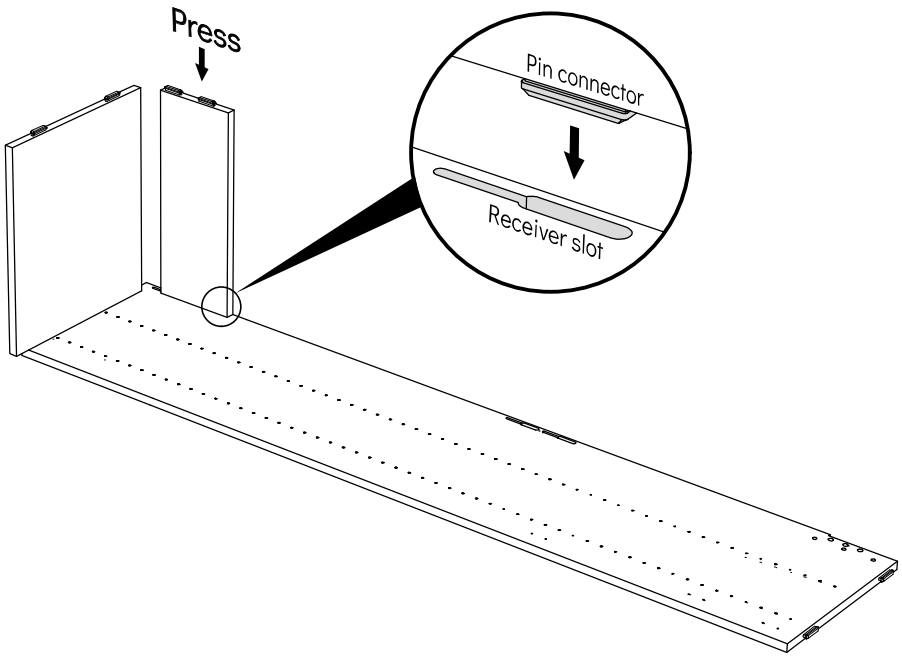


Leave this connection loose - slide only enough to hold the panel upright (do not lock yet).

## Carcass Assembly

### 3 Attach Middle Nailer Panel

- Position the (15) Middle Nailer Panel at the designated height on the same Vertical Side Panel.
- Align the Locking pins on the (15) Middle Nailer Panel with the matching keyhole slots in the vertical.

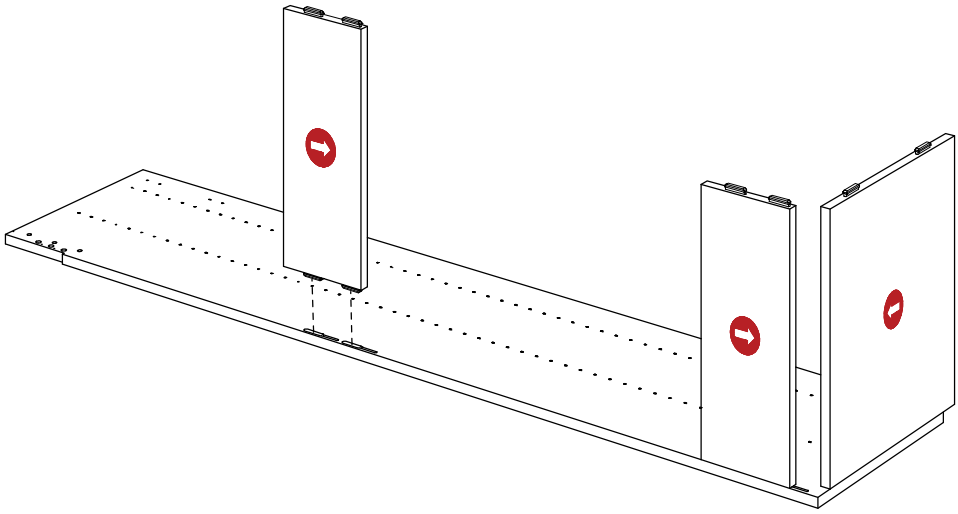

*The red arrow sticker on the back identifies the Locking pins slide-to-lock direction for Middle Nailer Panel.*

- Press the (15) Middle Nailer Panel straight down so all pins enter the slots.

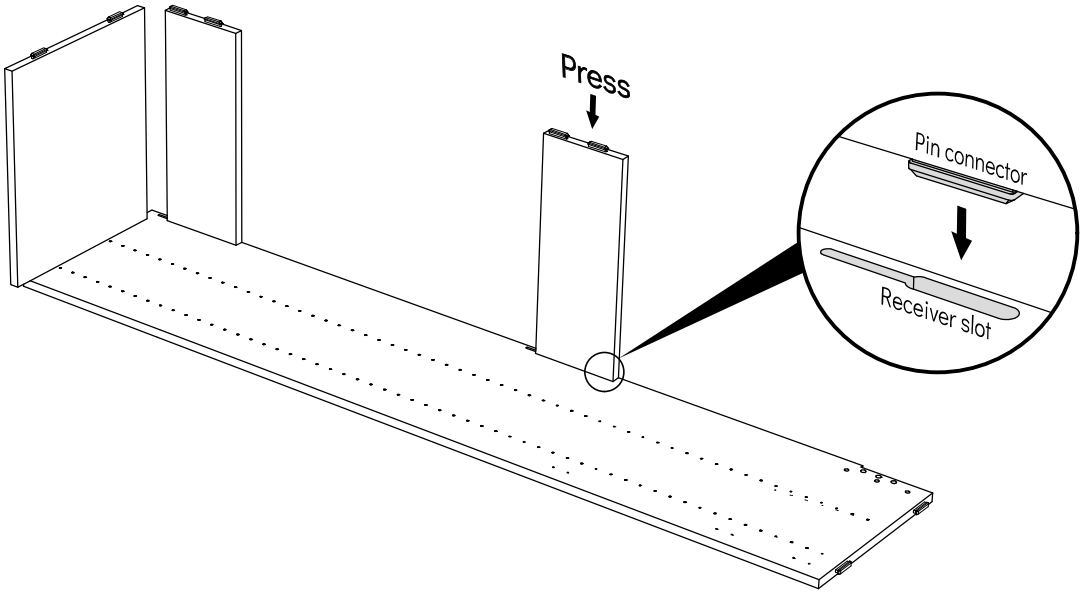


Leave this connection loose - slide only enough to hold the panel upright (do not lock yet).

## Carcass Assembly

### 4 Attach Top Nailer Panel

- Position the (16) Top Nailer Panel at the top rear of the same Vertical Side Panel.
- Align the metal dowels and wood dowels on the (16) Top Nailer Panel with the pre-drilled holes in the vertical panel.
- Press the (16) Top Nailer Panel straight into the vertical until all dowels are fully seated and the rear edge is tight.

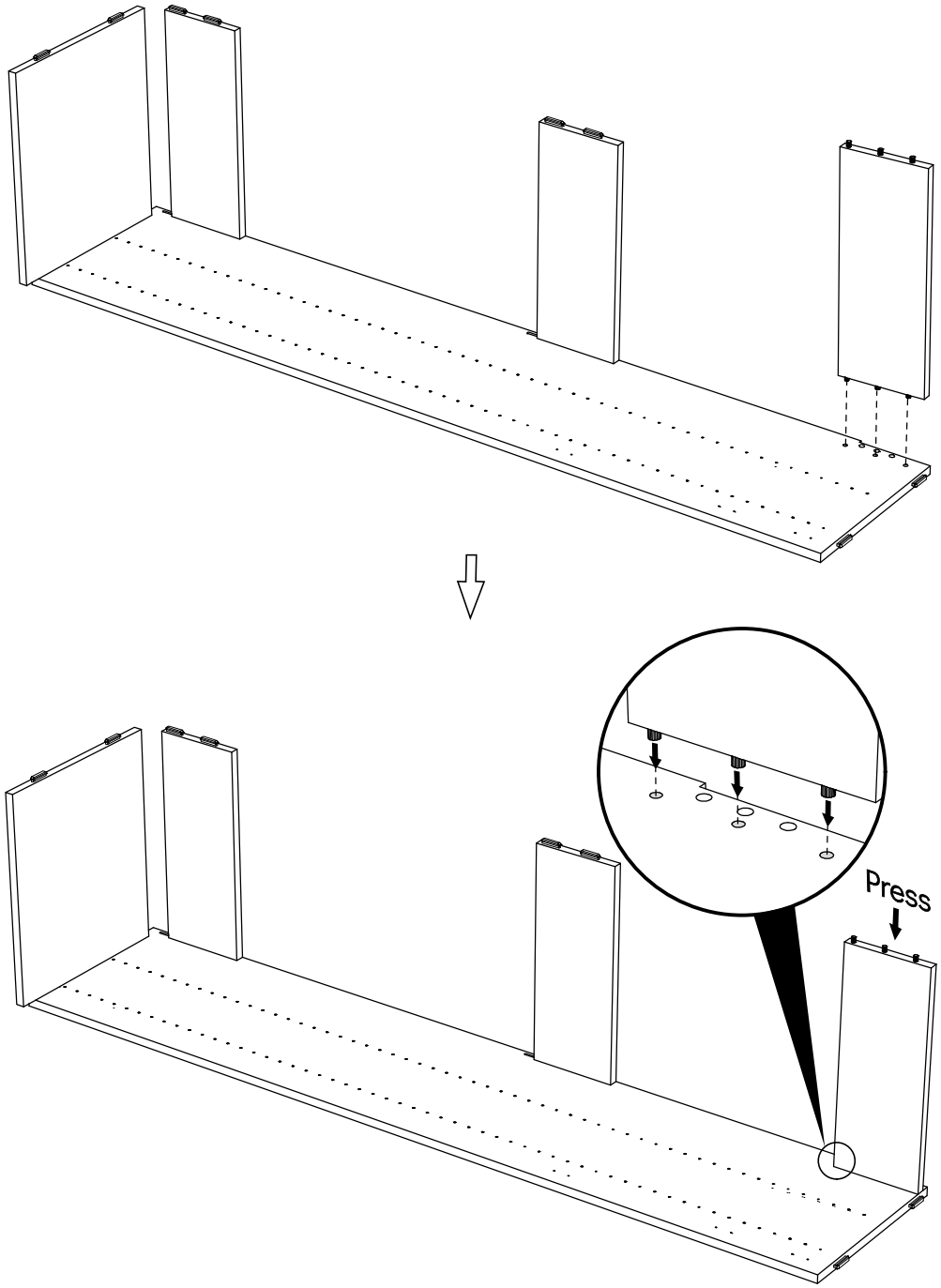

## Carcass Assembly

### 5 Attach Second Vertical Side Panel

- Take the second Vertical Side Panel and orient it so the inside face will face toward the horizontals and the front edge aligns with the first vertical.
- Position the second vertical above the exposed ends of the:
  - (1) Bottom Panel
  - (14) Bottom Nailer Panel
  - (15) Middle Nailer Panel
  - (16) Top Nailer Panel
- Carefully lower the second vertical, making sure:
  - All Locking pins on the horizontals enter their matching keyhole slots in the second vertical.
  - All dowels from the (16) Top Nailer Panel enter their corresponding holes in the second vertical.

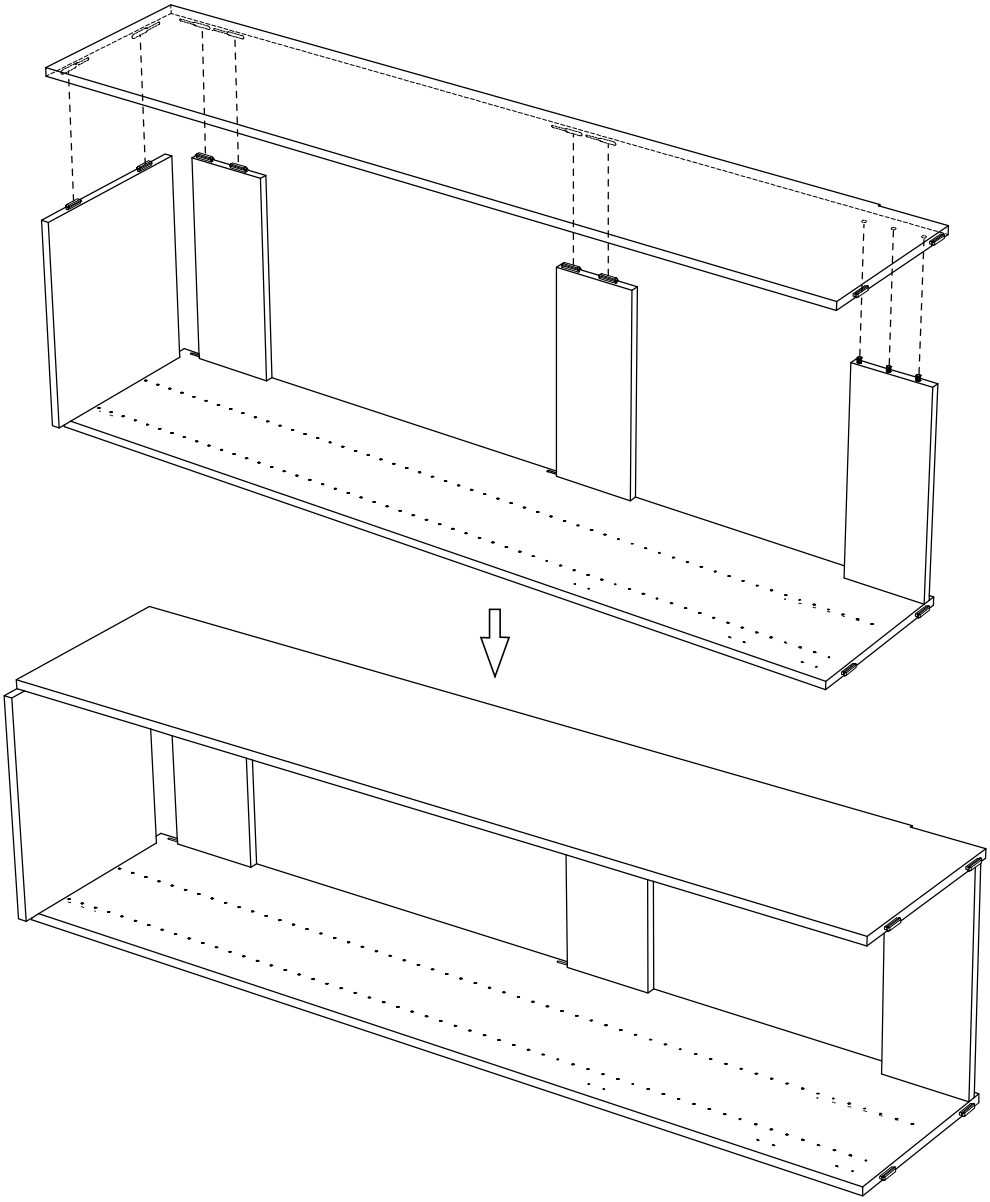

## Carcass Assembly

- Once everything is aligned, press the second vertical down until all pins and dowels are fully inserted.
- At this point, all  Locking pins joints remain in the loose position; nothing has been slid to lock yet.

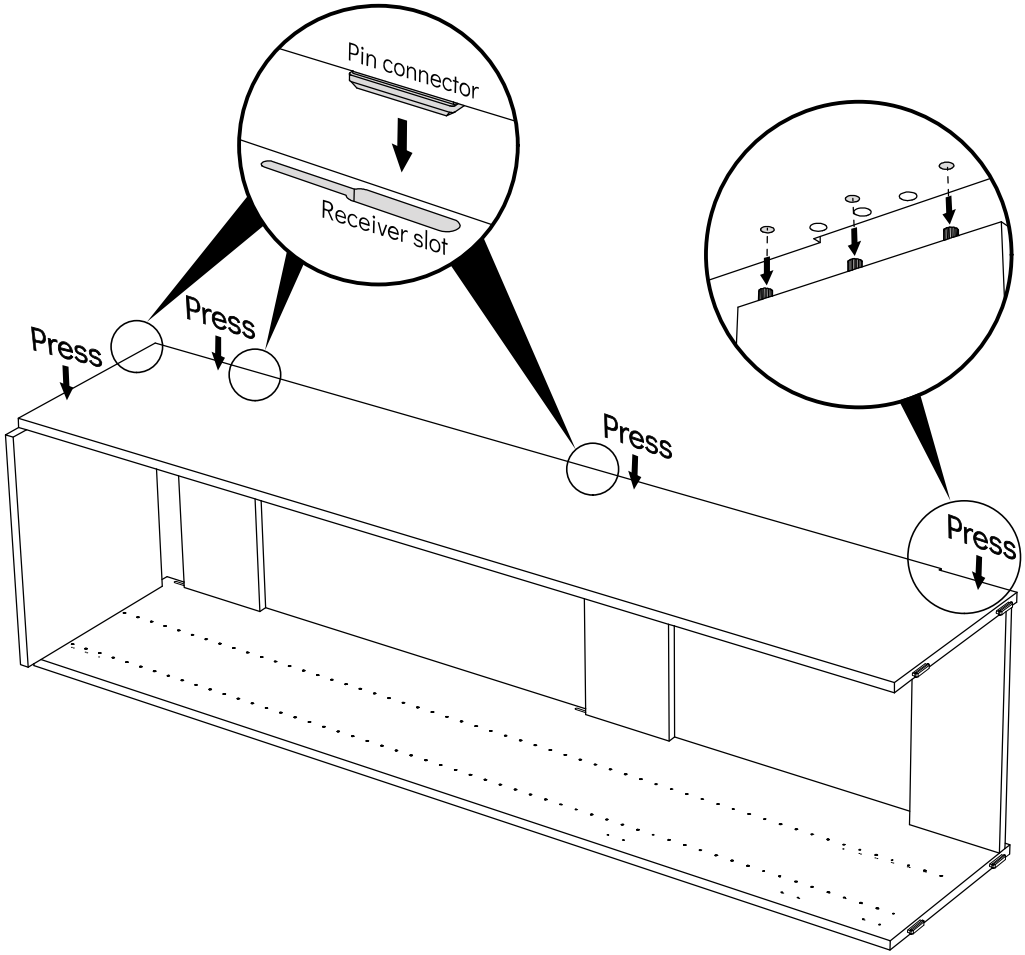

## Carcass Assembly

### 6 Tighten Joints

- With both Vertical Side Panels in place, begin tightening the Locking pins joints in the following order:
  - (1) Bottom Panel
  - (14) Bottom Nailer Panel
  - (15) Middle Nailer Panel
- For each panel:
  Support the carcass as needed.
  Slide the panel in the Locking pins locking direction until the joint is fully seated and tight.

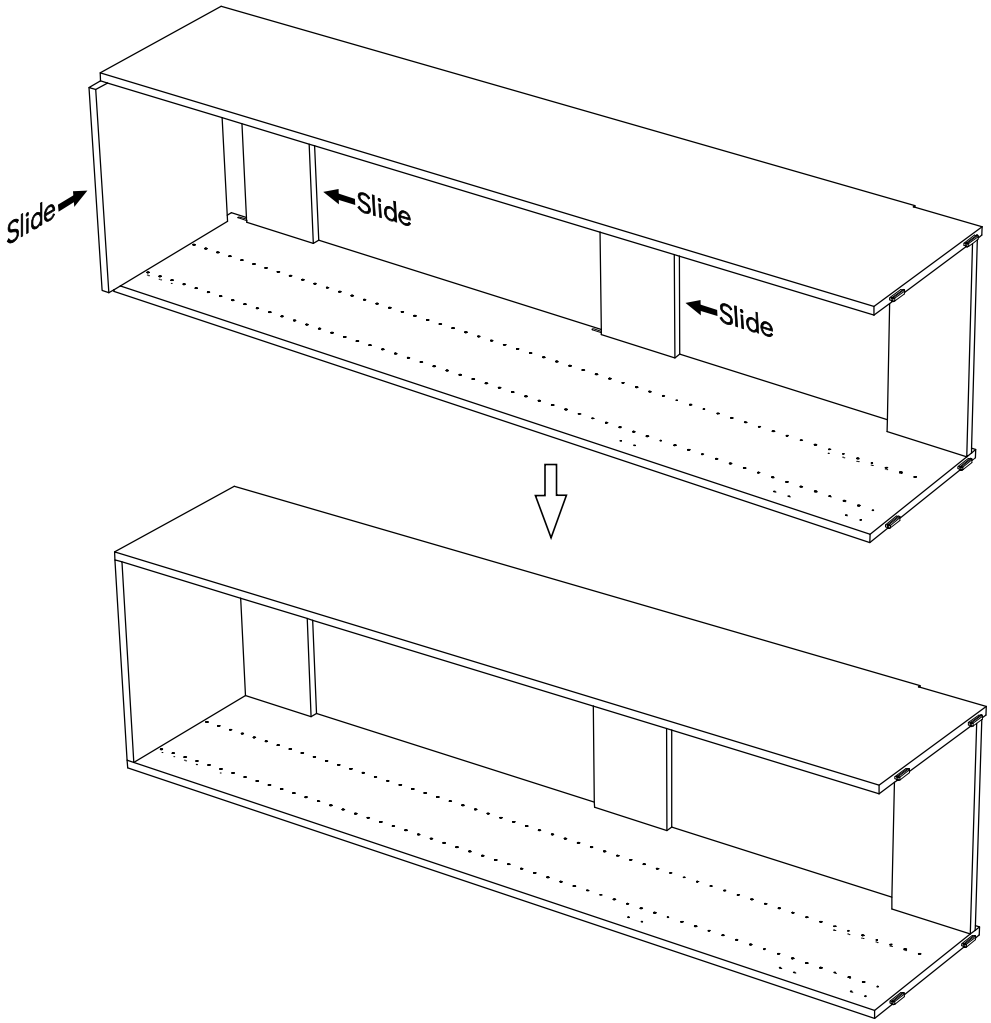


- After all three are locked, check that:
  The two Vertical Side Panels are parallel.
  The front edges of the Bottom Panel and verticals are flush.
  The Bottom Nailer Panel and Middle Nailer Panel sit tight between the verticals with no visible gaps at the joints.
  The Top Nailer Panel remains fully seated on its dowels.

## Carcass Assembly

### 7 Rotate Carcass + Stand Upright (Before Top Panel assembly)

- Confirm the Bottom Panel, Bottom Nailer Panel, and Middle Nailer Panel are fully locked and seated.
- Rotate the carcass so it is laying on its side, resting on the Nailer Panels.

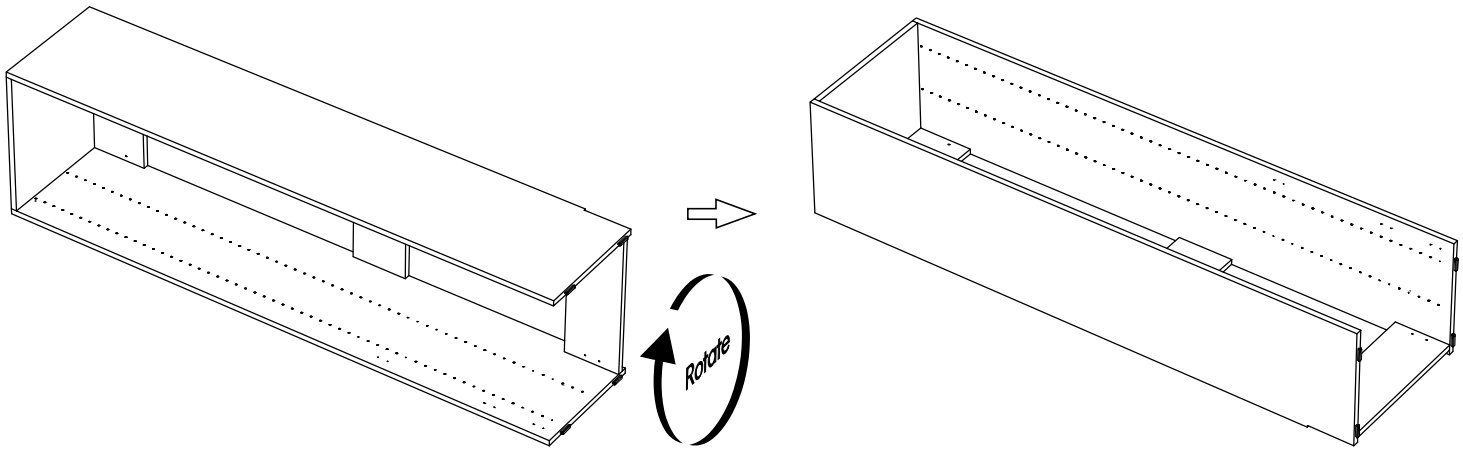


- Using a two-person lift, hold the carcass at the Vertical Side Panels and raise the module to the upright position.
- The Top Nailer Panel is not locked at this stage, so the cabinet must be lifted from the side panels.

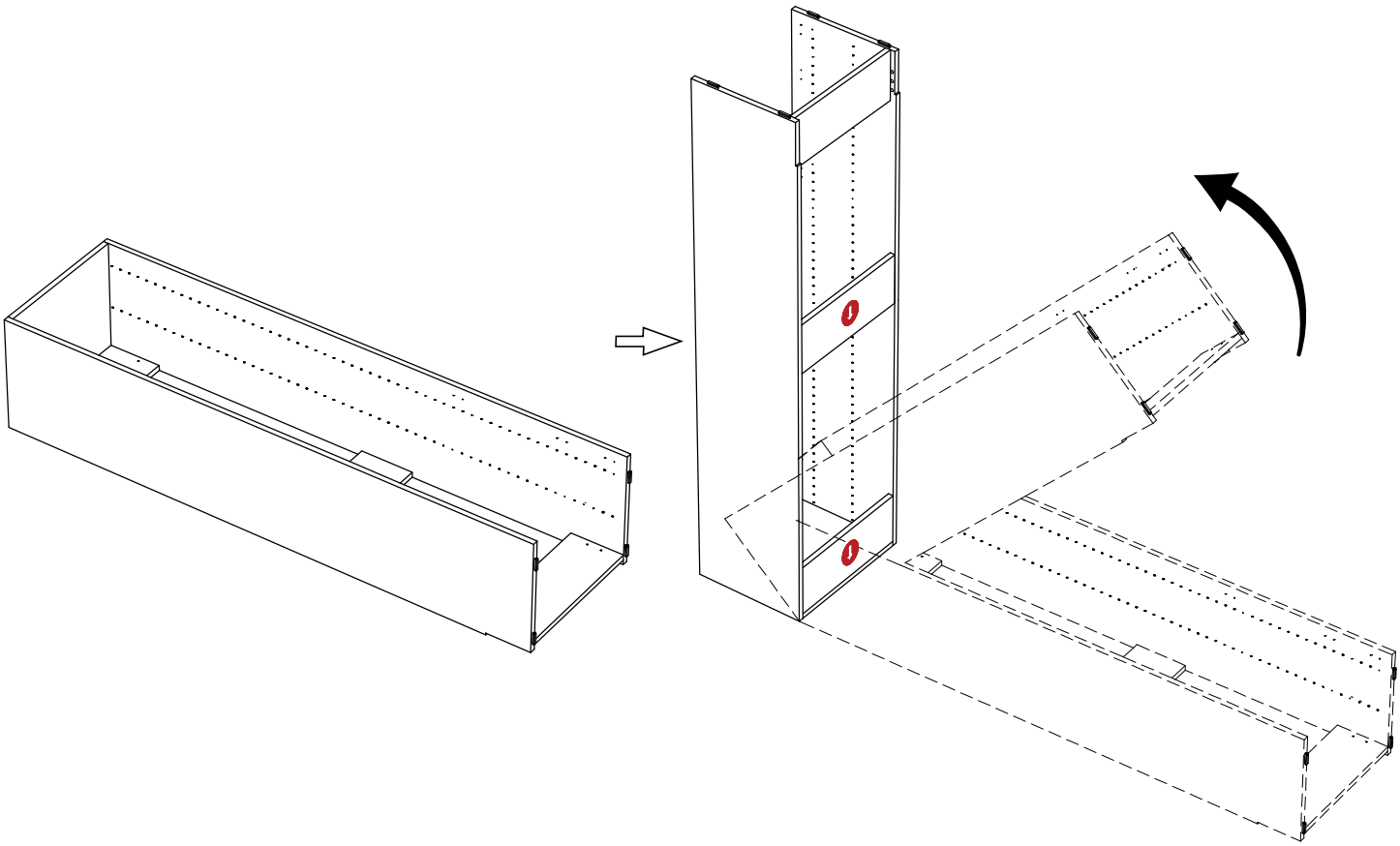

## Carcass Assembly

### 8 Attach Top Panel

- With the carcass upright, position the (32) Top Panel across the tops of both Vertical Side Panels.
- Align the Locking pins/slots (per drilling pattern) so each connection fits correctly into the verticals.
- Press the (32) Top Panel straight down so all pins fully enter the slots.
- Slide the (32) Top Panel in the Locking pins locking direction until all joints are fully seated and tight.
- Confirm the back edges of the Top Panel and both verticals are flush and the carcass is rigid.

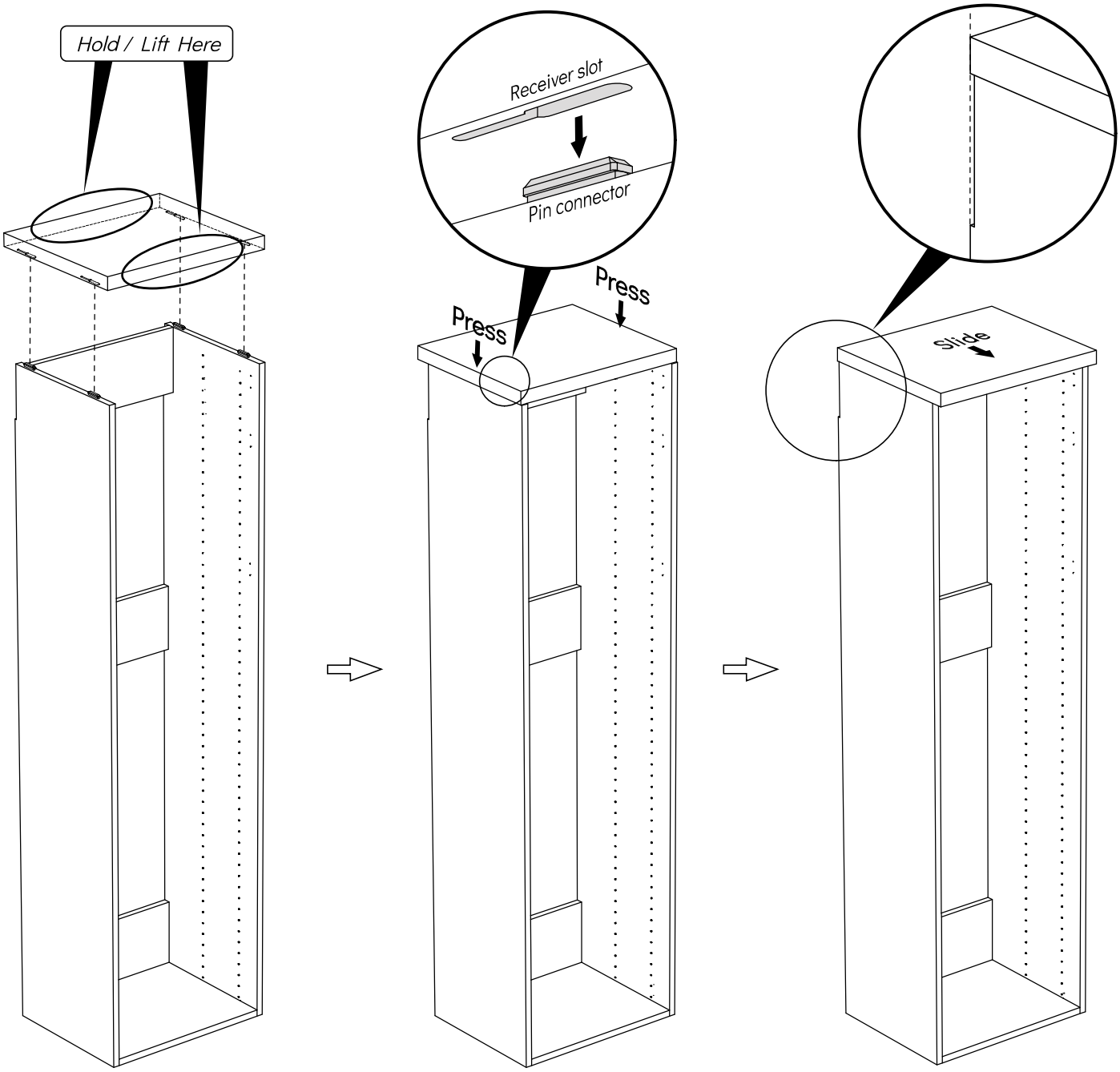

# CARCASS ASSEMBLY

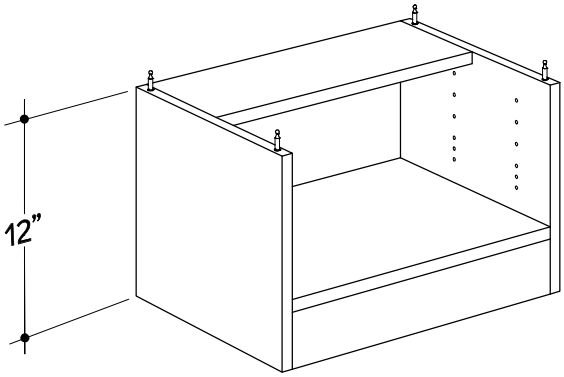


**General Assembly Guidelines:**

- Two person team is required for all module assemblies
- Always align components carefully—seat all Locking pins fully into the oval openings before sliding to lock.
- Use light pressure initially to guide parts into place, followed by firm pressing or tapping.
- Check for flush alignment at each connection point to maintain precision and stability.
- If resistance is felt, do not force components. Realign, and try again to avoid damage.

Handle the assembled carcass with care—while dimensionally stable, the structure is not fully engaged until mounted on the rail and anchored below.

## Preparation Steps

- Lay a soft cloth or protective blanket over your work surface to prevent damage to the panels.
- Lay the Left and Right Vertical Panels flat on the surface, interior side facing up.

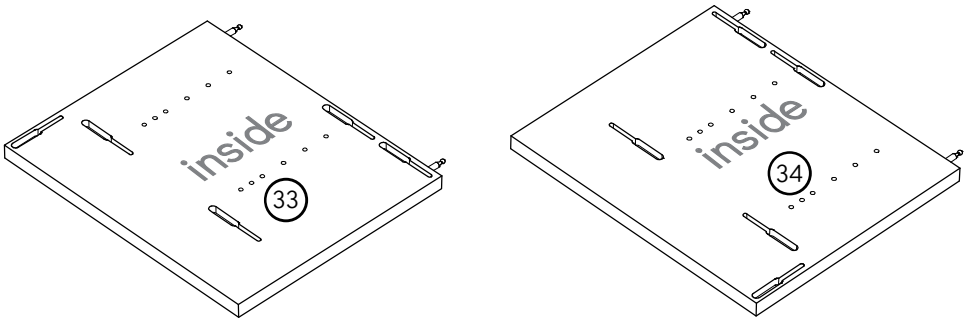


*12" Floor Standing Extension Vertical Panel Left and Right*

- Stage the following components within easy reach.
- Verify all parts are of the correct width and finish.

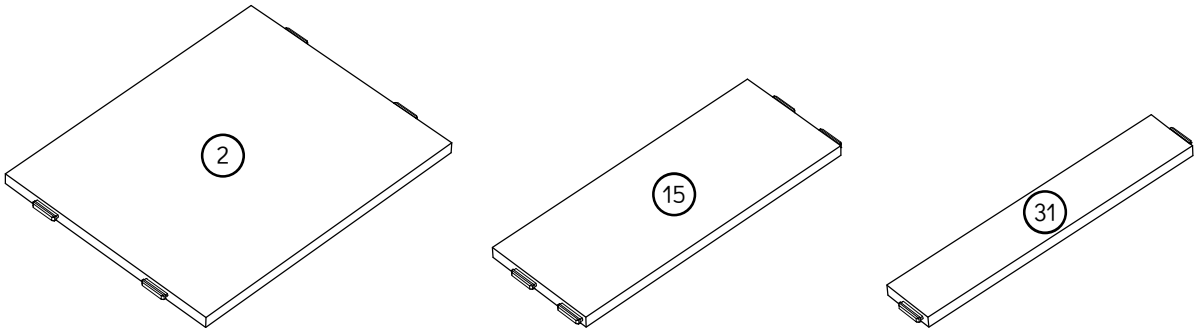


Bottom Panel V2 | Middle Nailer Panel | Toe - kick Panel

## Carcass Assembly

### 1 Attach Bottom Panel

- Place the first Vertical Side Panel on a clean, flat surface with the inside face up and the front edge toward you.
- Position the (2) Bottom Panel V2 at the bottom of the vertical panel.
- Align all Locking pins on the (2) Bottom Panel V2 with the matching keyhole slots in the vertical.

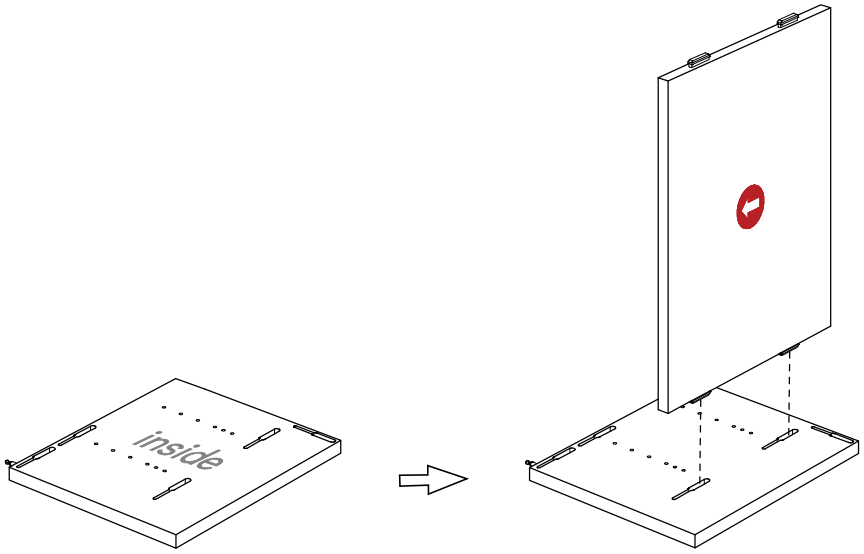


*The red arrow sticker on the back identifies the Locking pins slide-to-lock direction for Bottom Panel V2.*

- Press the (2) Bottom Panel V2 straight down so all pins enter the oval openings of the slots.

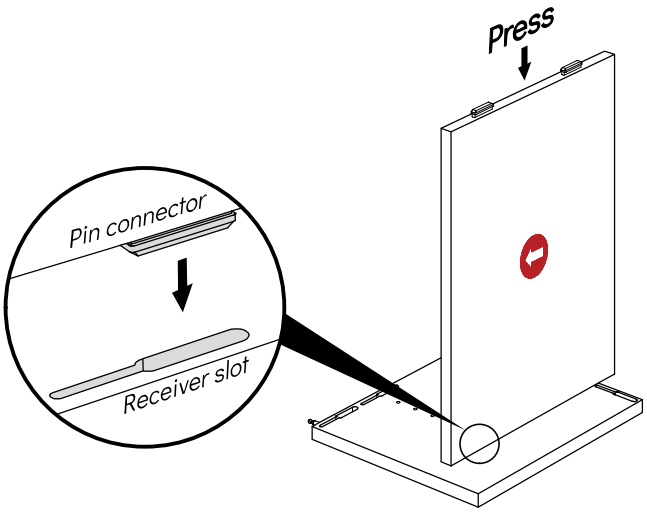


Leave this connection loose - slide only enough to hold the panel upright (do not lock yet).

## Carcass Assembly

### 2 Attach Middle Nailer Panel

- Position the (15) Middle Nailer Panel in the designated space on the same Vertical Side Panel.
- Align the Locking pins on the (15) Middle Nailer Panel with the matching keyhole slots in the vertical.
- Press the (15) Middle Nailer Panel straight down so all pins enter the slots.

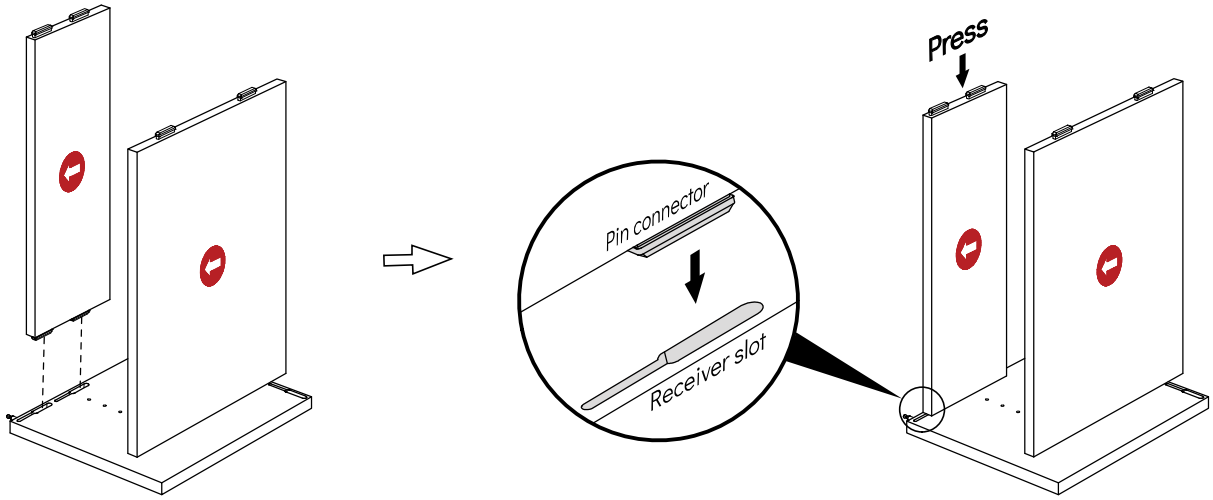


*The red arrow sticker on the back identifies the Locking pins slide-to-lock direction for Middle Nailer Panel.*

Leave this connection loose - slide only enough to hold the panel upright (do not lock yet).

### 3 Attach Toe-kick Panel

- Position the (31) Toe-kick Panel in the designated space on the same Vertical Side Panel.
- Align the Locking pins on the (31) Toe-kick Panel with the matching keyhole slots in the vertical.
- Press the (31) Toe-kick Panel straight down so all pins enter the slots.

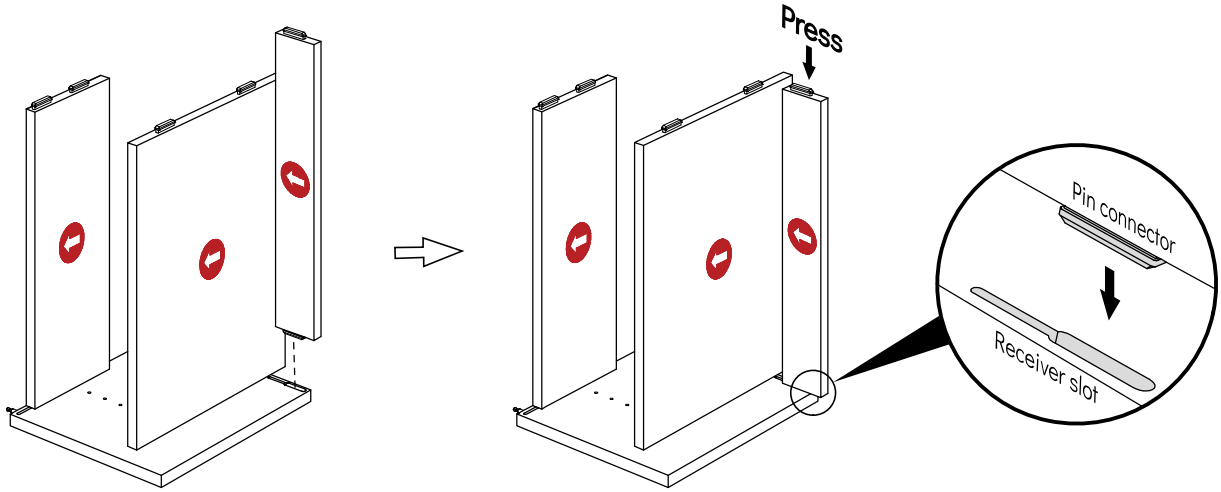


*The red arrow sticker on the back identifies the Locking pins slide-to-lock direction for Toe-kick Panel.*

Leave this connection loose - slide only enough to hold the panel upright (do not lock yet).

## Carcass Assembly

### 4 Attach Second Vertical Side Panel

- Take the second Vertical Side Panel and orient it so the inside face faces the horizontals and the front edge aligns with the first vertical.
- Position the second vertical above the exposed ends of the:
  - (2) Bottom Panel V2
  - (15) Middle Nailer Panel
  - (31) Toe-kick Panel
- Carefully lower the second vertical, making sure all Locking pins on the horizontals enter their matching keyhole slots in the second vertical.

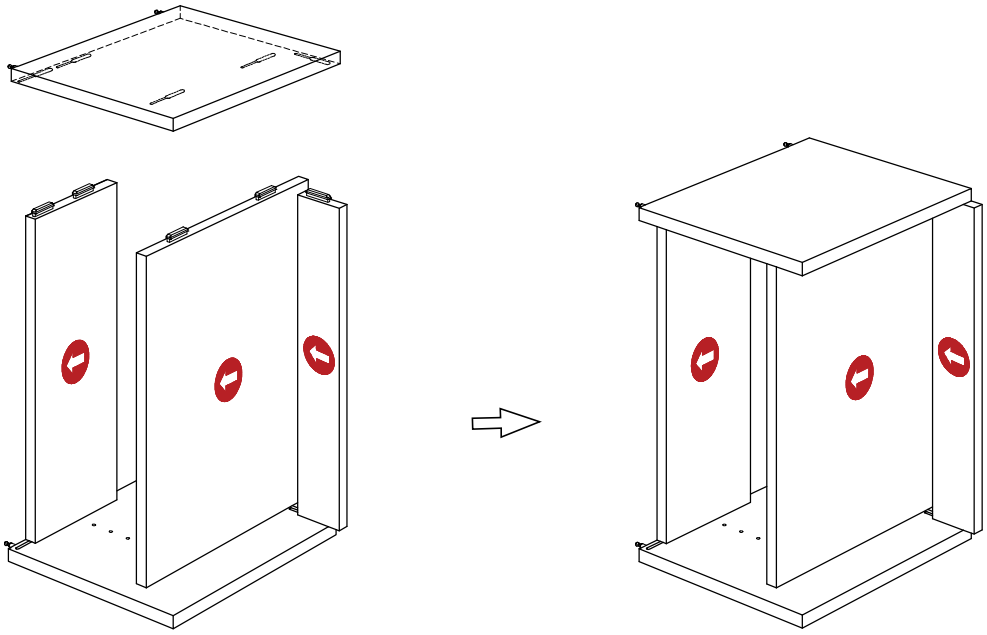

- Once everything is aligned, press the second vertical down until all pins and dowels are fully inserted.
- At this point, all Locking pins joints remain in the loose position; nothing has been slid to lock yet.

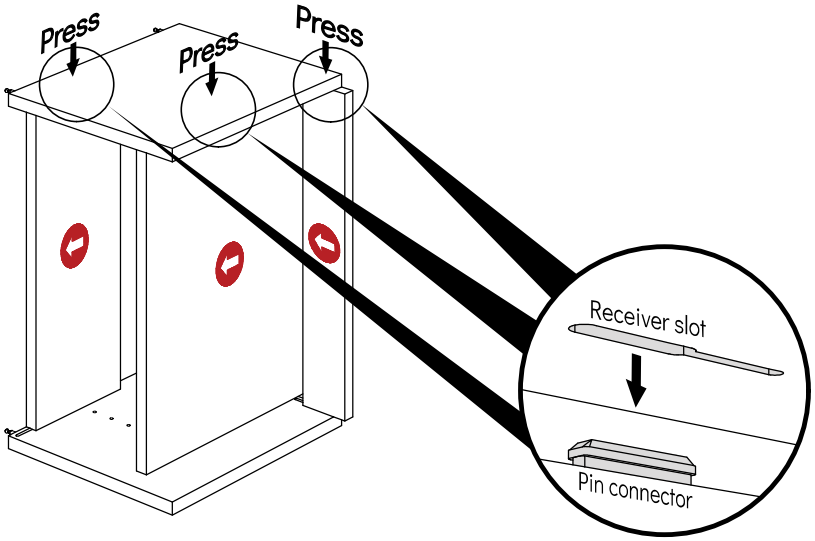

## Carcass Assembly

### 5 Tighten Joints

- With both Vertical Side Panels in place, tighten the Locking pins joints in the following order:
  - (2) Bottom Panel V2
  - (15) Middle Nailer Panel
  - (31) Toe-kick Panel
- For each panel:
  - Support the carcass as needed.
  - Slide the panel in the Locking pins locking direction until the joint is fully seated and tight.

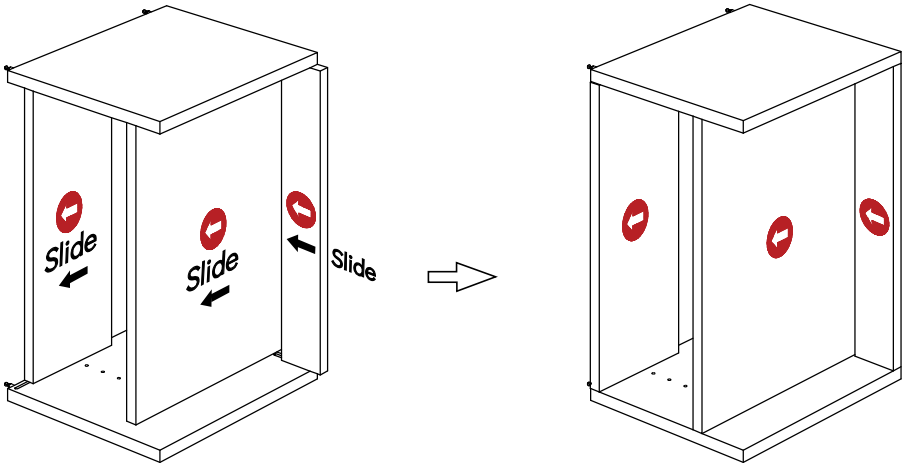


After all panels are locked, check that:
- The two Vertical Side Panels are parallel.
- The front edges of the Bottom Panel V2 and verticals are flush.
- The Middle Nailer Panel and Toe-kick Panel sit tight between the verticals with no visible gaps.

### 6 Attach Bottom Module to Main Cabinet

Ensure both the main cabinet and bottom module are fully assembled and empty.
- Lay both carcasses on their sides, resting on the nailer panels, on a protected floor surface.
- Align the pre-installed pinlocks (pins) with the pinhole receivers at the bottom of the main cabinet.

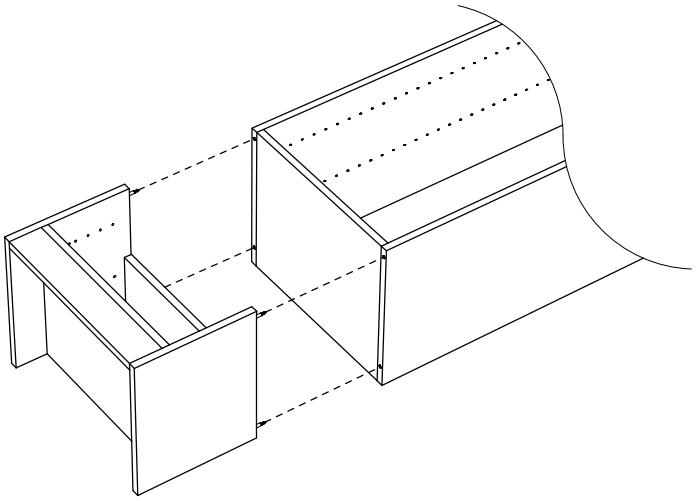

## Carcass Assembly

- Press the two carcasses together straight and evenly until the pinlocks engage. Engagement is confirmed by a firm seated feel.

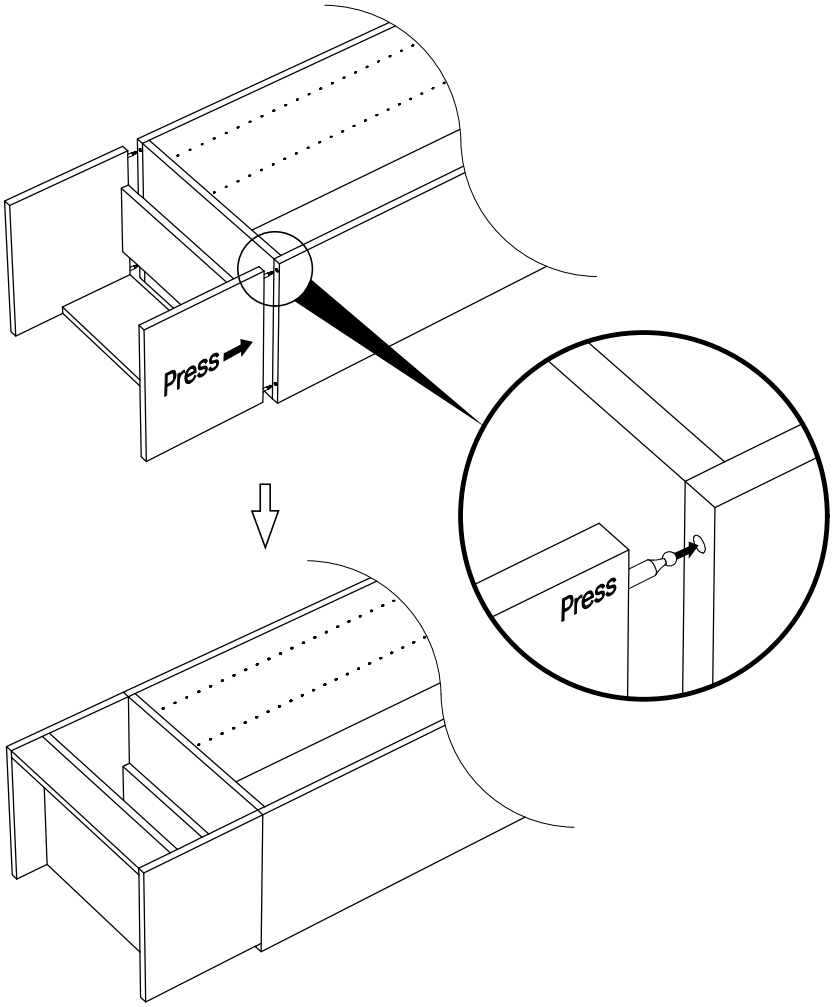


**Important:**

- Do not attempt to engage the pinlocks while the cabinet is upright. This connection must be made with both units lying flat.
- Using a two-person lift, bring the combined assembly into the upright position while supporting the full structure.

**Note:**

The pinlock system provides alignment only. Final load support is achieved through wall mounting and the bottom module resting on the floor.

# Cabinet Mounting Guide

## Required Tools

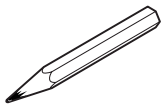

Pencil

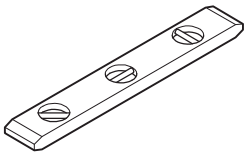

Level

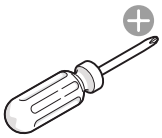

Screwdriver or impact driver

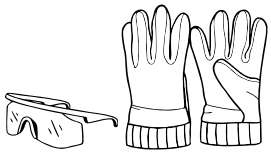

Safety glasses & gloves

## Installation Steps

### 1 Mount Cabinet to Suspension Rail

- Confirm suspension brackets are pre-installed inside cabinet uprights.

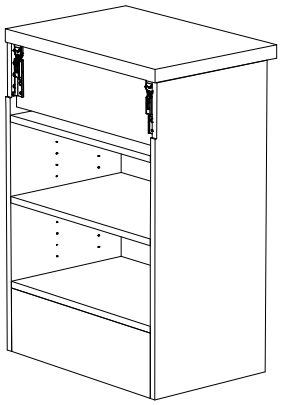

- Lift cabinet and engage both suspension brackets onto suspension rail.

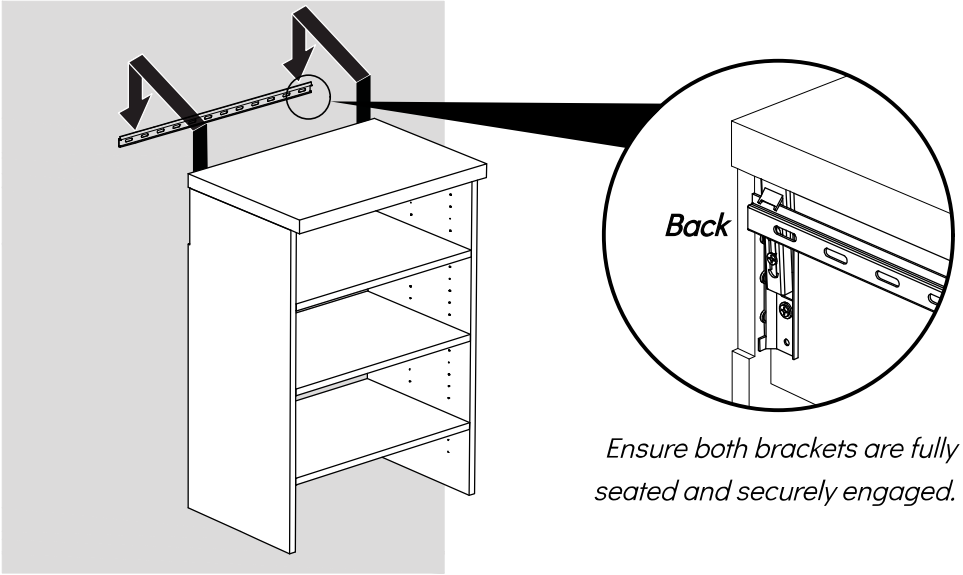


*Ensure both brackets are fully seated and securely engaged.*

## Installation Steps

### 2 Level and Position Cabinet

- Adjust height (bottom screw) and depth (top screw).

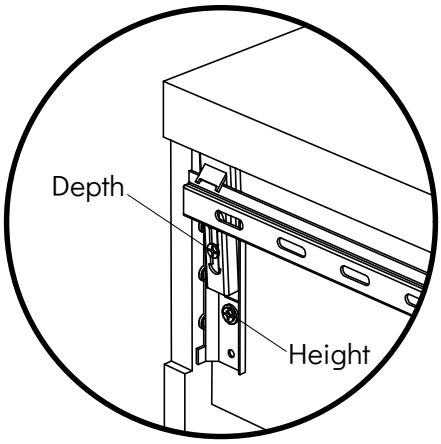


*Back*

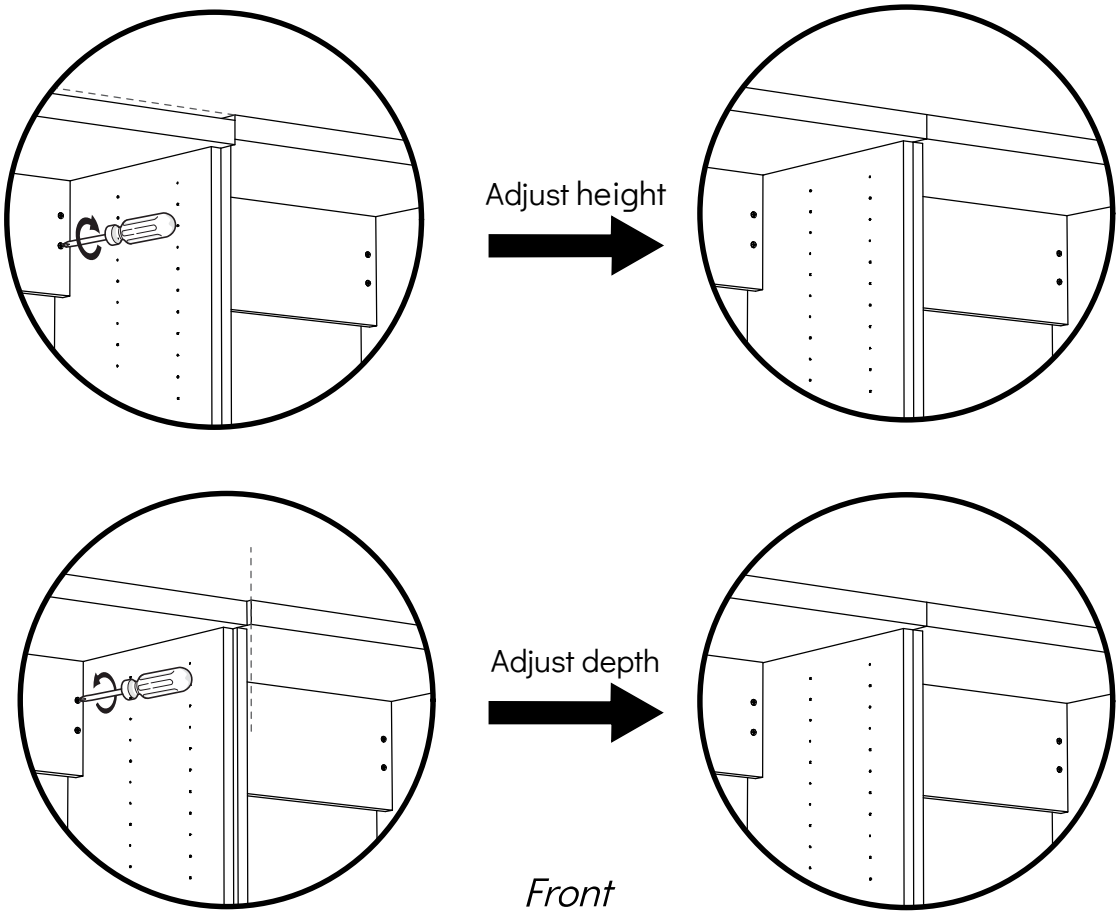


*Front*

- Repeat cabinet mounting and adjustment steps for remaining modules.

## Installation Steps

### 3 Final Cabinet Alignment

Verify cabinets are level, plumb, and aligned across all modules.

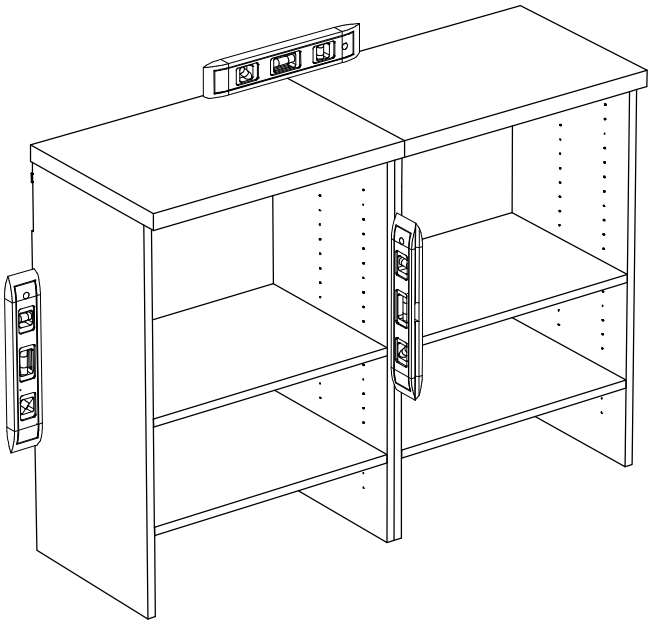

### 4 Bottom Nailer Anchoring

Anchor Bottom Nailer Panel to wall through pre-drilled holes.

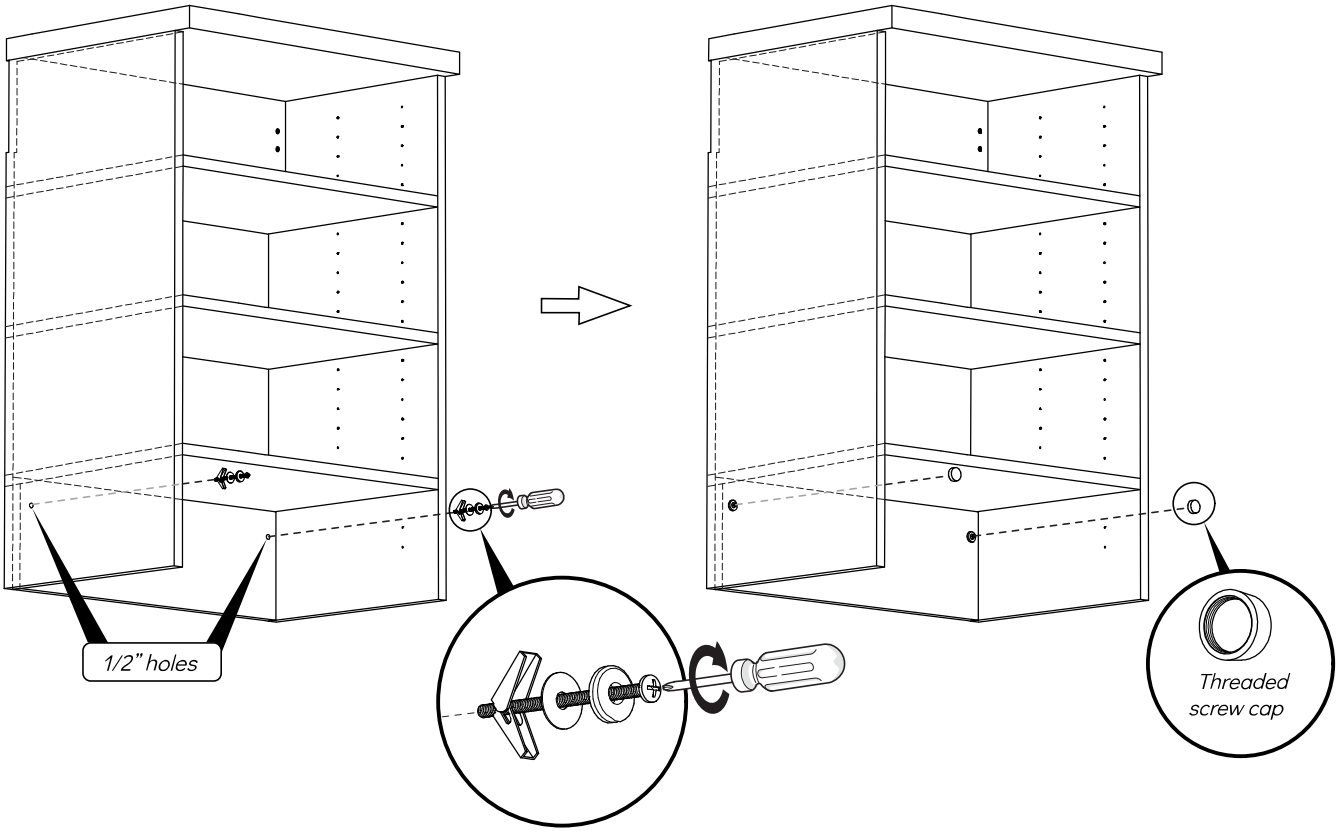

## Installation Steps

- **Drywall Anchor Installation Detail**

1. Drill a 1/2" hole through the wall surface.

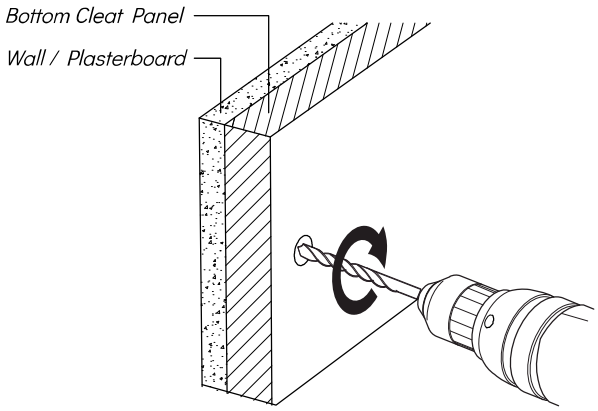


2. Insert folded butterfly anchor through the Bottom Nailer Panel and wall.

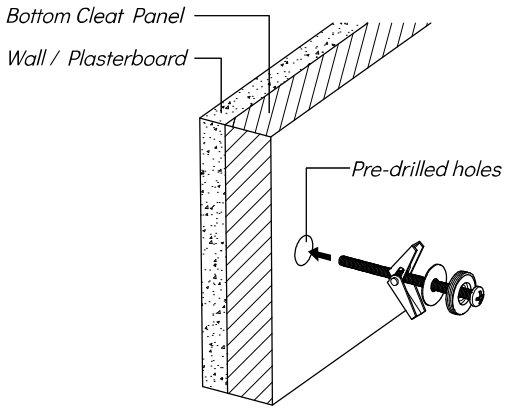


3. Tighten screw until anchor fully expands behind wall surface.

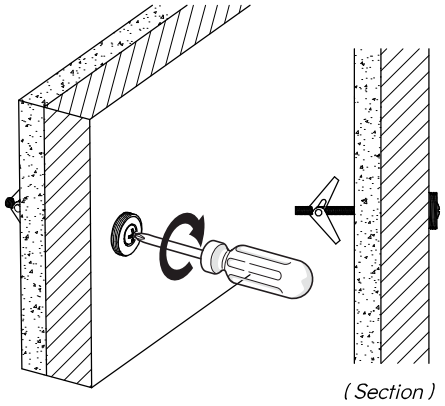


4. Do not overtighten.

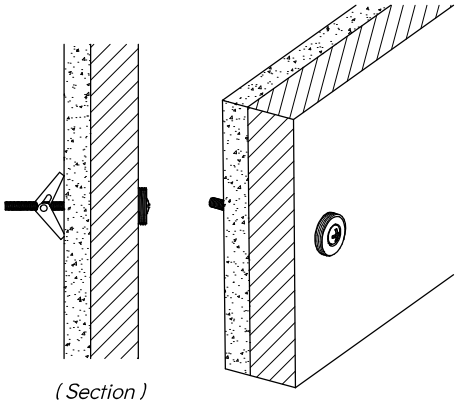


5. Install Screw Cap

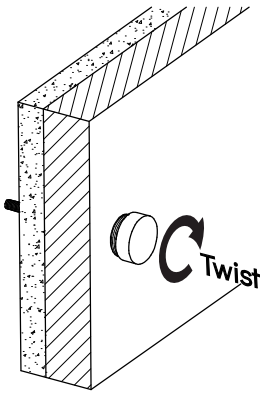

## Installation Steps

### 5 Final Safety Check

- Confirm all connections are tight; cabinet fully seated on rail.

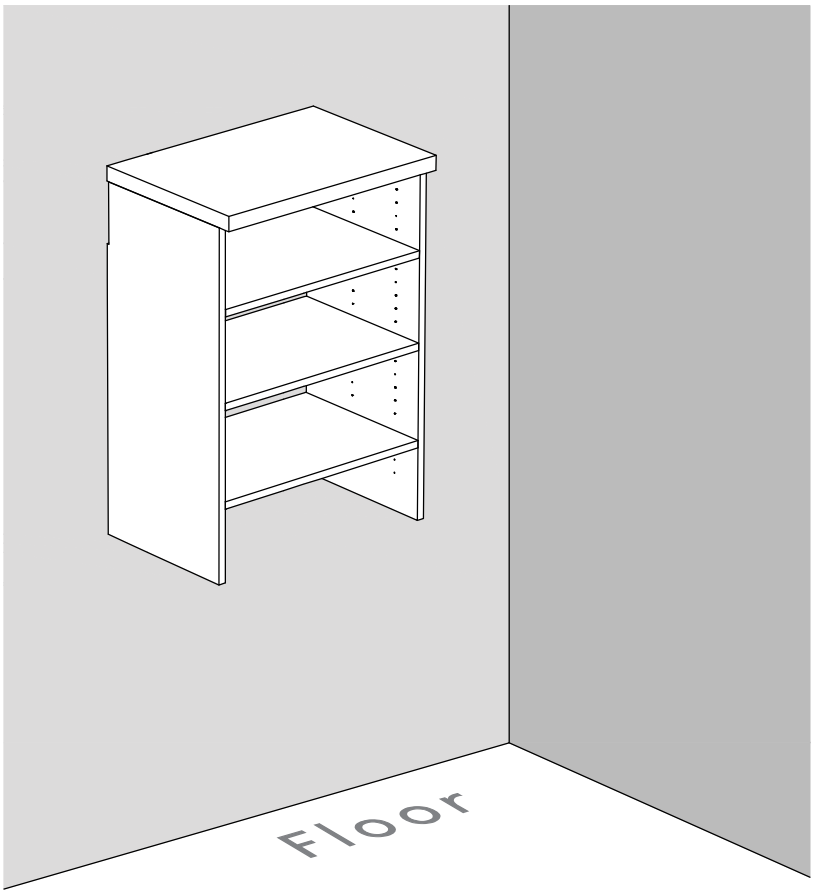


### Wall Type Reference Table

| Wall Type | Recommended Fasteners | Notes |
|---|---|---|
| Drywall + Wood Stud | #10 wood screws into studs | Do not use anchors alone |
| Concrete / Masonry | Masonry anchors or wall plugs + stainless screws | Drill with masonry bit |
| Metal Stud | Self-drilling metal screws or toggle bolts rated for load | Pre-drill to avoid stud deformation |

### Notes:

- Safe load depends on proper fasteners and wall type.
- Always use two installers.
- Refer to Hettich technical sheets for load limits.
- Compatible with all Via Closets modular systems.

# DRAWER ASSEMBLY REVEAL

## System Overview

This guide covers the assembly of the solid-wood drawer box using pre-cut dovetail joinery.
All components are designed to assemble **without fasteners.**
Drawer box heights and styles:

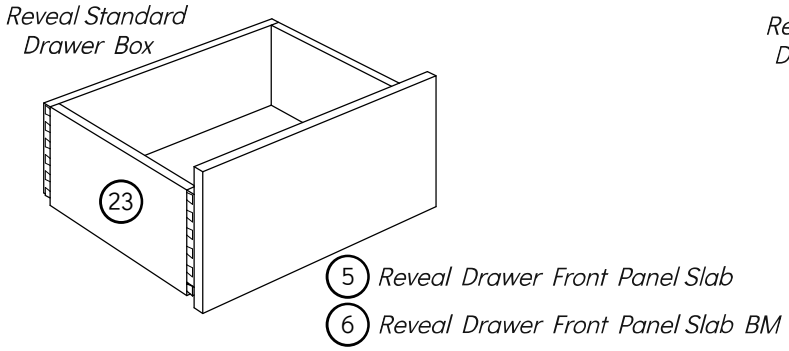


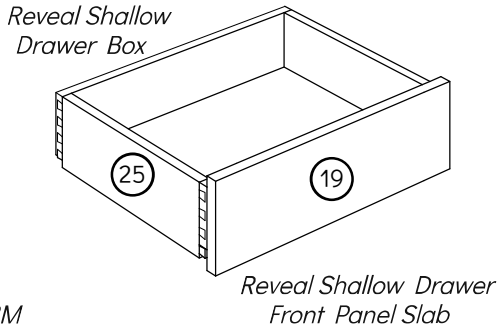


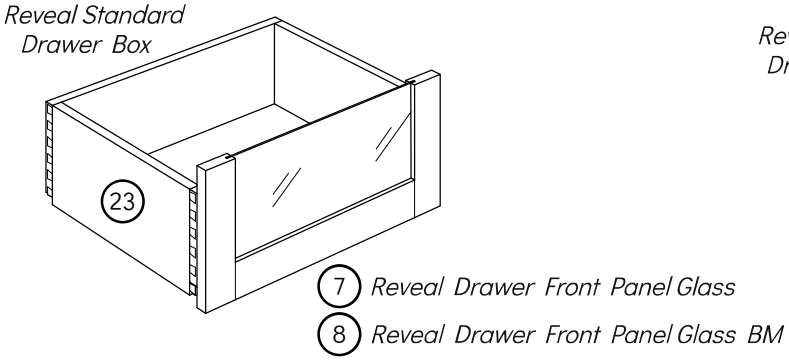


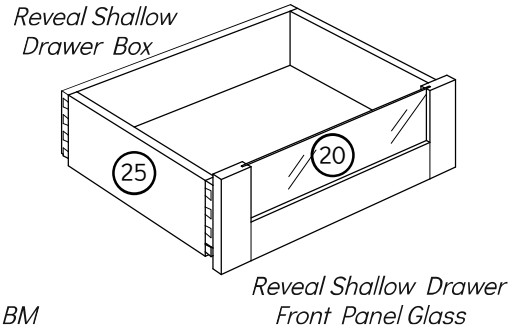


Select and set aside the Drawer box and Drawer front panel that matches your drawer height and style configuration.

## Included Components

Ensure all drawer box components are present and oriented correctly before starting.

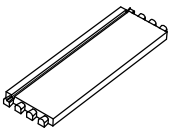
Left side panel

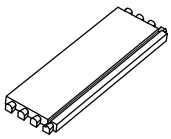
Right side panel

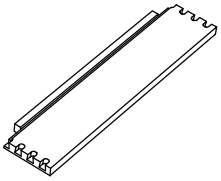
Drawer back panel

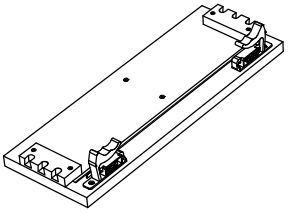
Drawer front panel

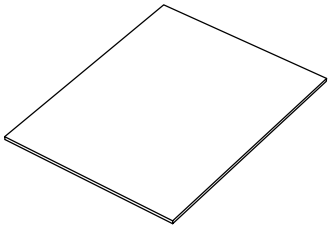
Drawer bottom panel

## Assembly Steps

### 1 Insert Drawer Bottom Panel

- Slide the bottom panel into the groove of the drawer front panel.
- Ensure the panel is fully seated and aligned within the groove before proceeding.

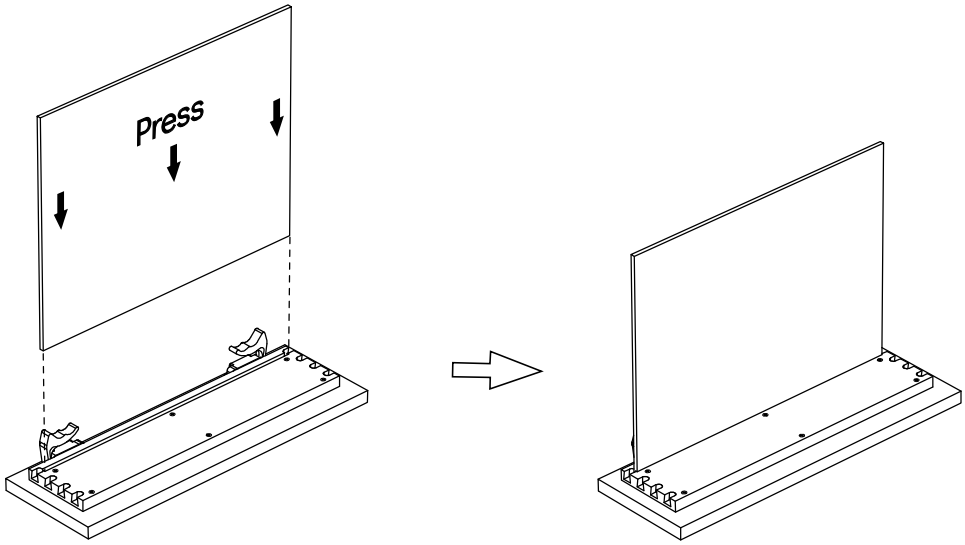


### 2 Attach Side Panels to Front Panel

- Align the dovetail joints of the left and right side panels with the drawer front panel.
- Press or tap into place until fully seated and flush.
- Ensure the bottom panel remains captured within the grooves of all connected components.

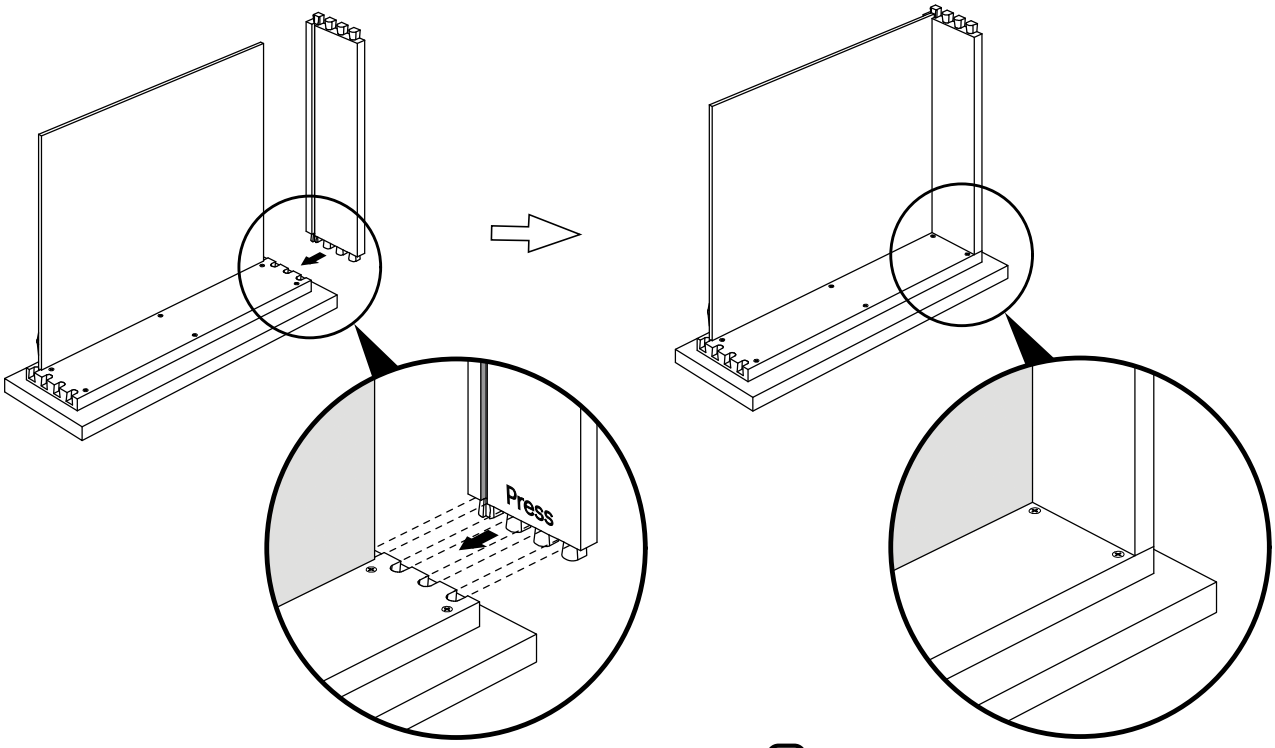


☑ Verify The Bottom Panel grooves are aligned

## Assembly Steps

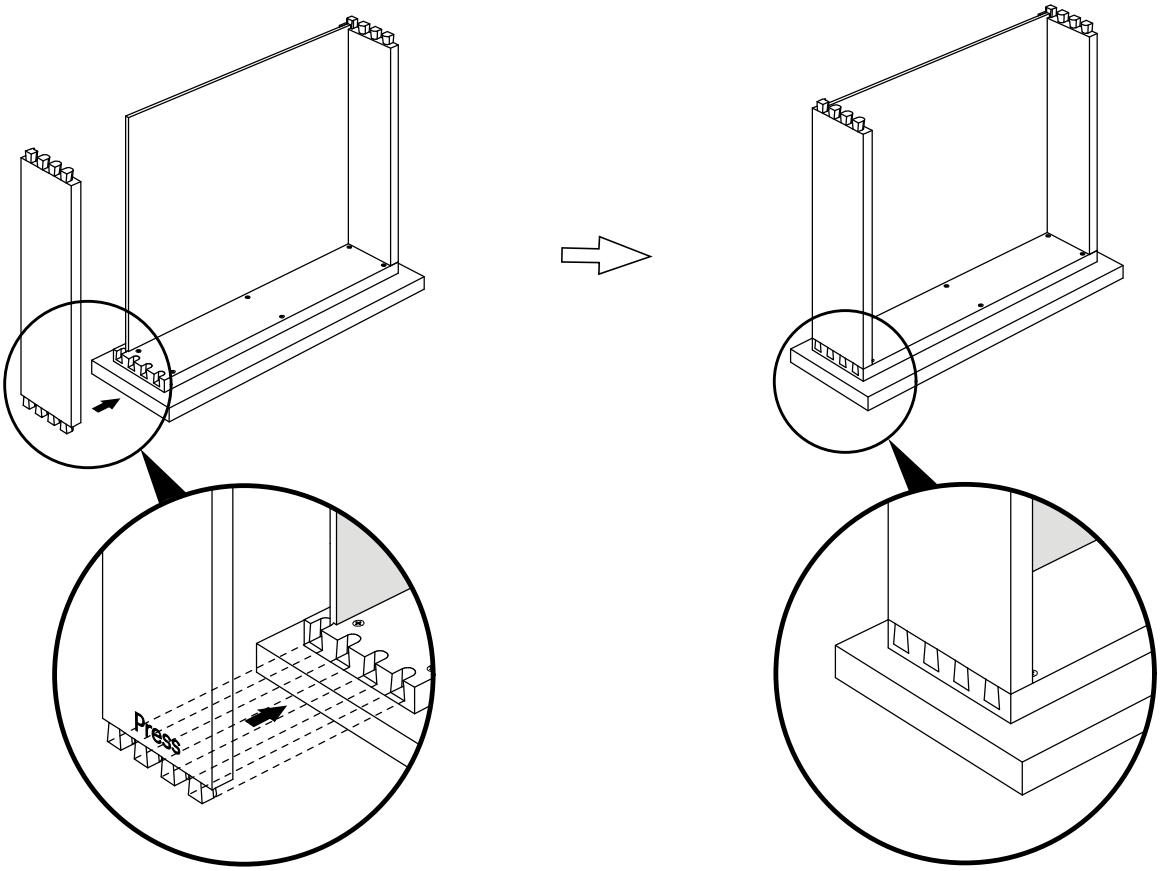


**Important:**
Do not force the joint. If resistance is felt, realign and try again.

### 3 Attach Drawer Back Panel

- Align the dovetail joints of the back panel with the side panels.
- Press or tap into place until fully seated and flush.

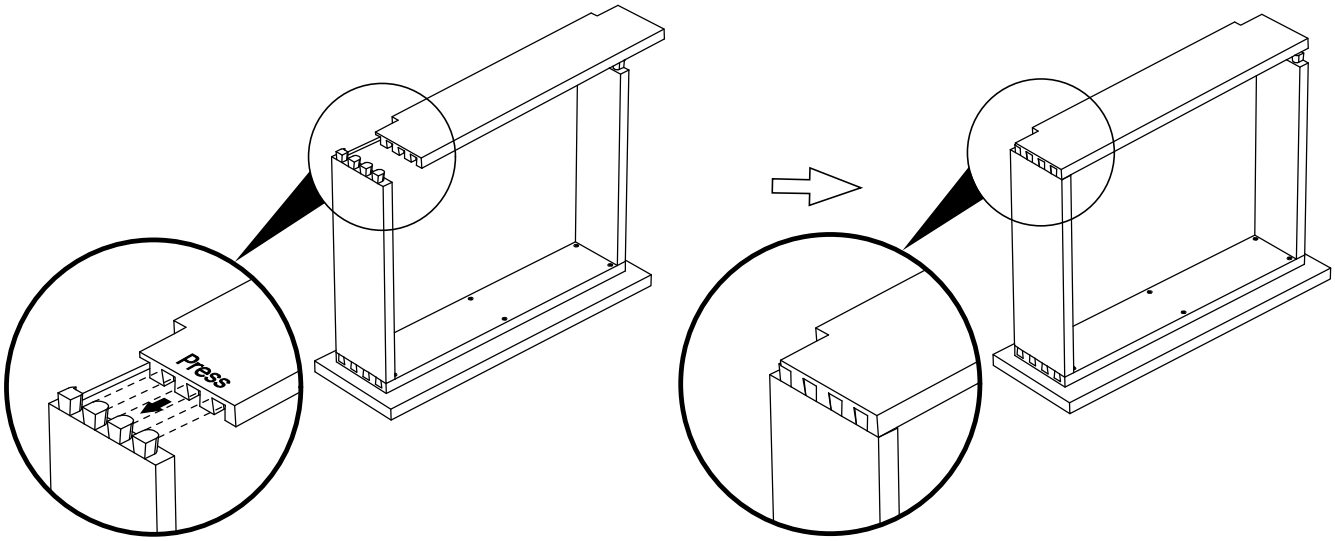

## Assembly Steps

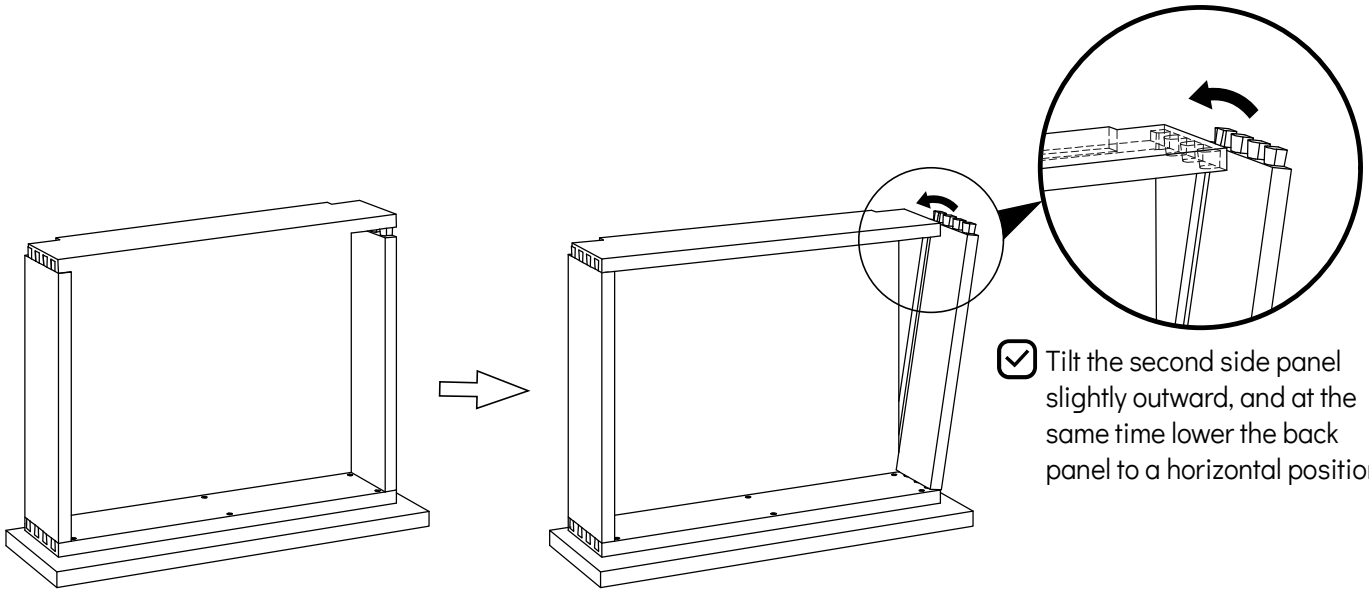

Tilt the second side panel slightly outward, and at the same time lower the back panel to a horizontal position.

### 4 Final Alignment Check

- Verify all joints are tight and fully engaged.
- Bottom panel is fully captured on all sides.
- Assembly is square and stable.

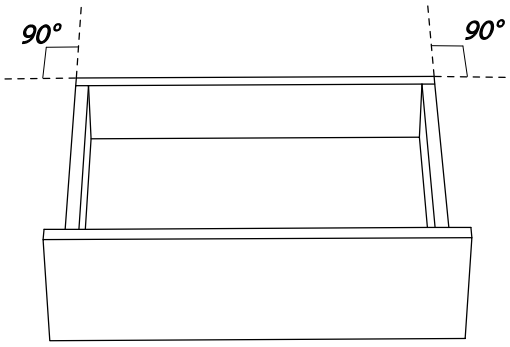


*Front*

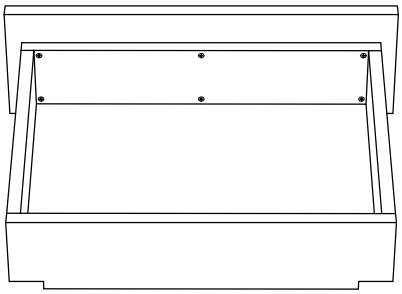

*Back*

### Completion

The drawer box is now fully assembled and ready to be mounted in the cabinet.

# DRAWER SLIDE INSTALLATION GUIDE

This guide covers the installation of drawer slides and drawer boxes using the cabinet's 32 mm system holes. All mounting locations are pre-defined to ensure proper alignment and spacing.

## Included Hardware

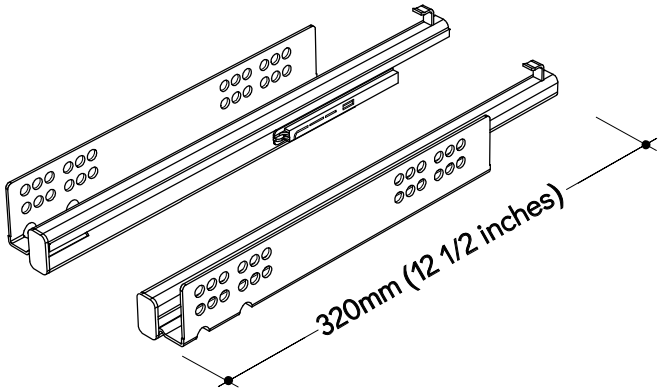


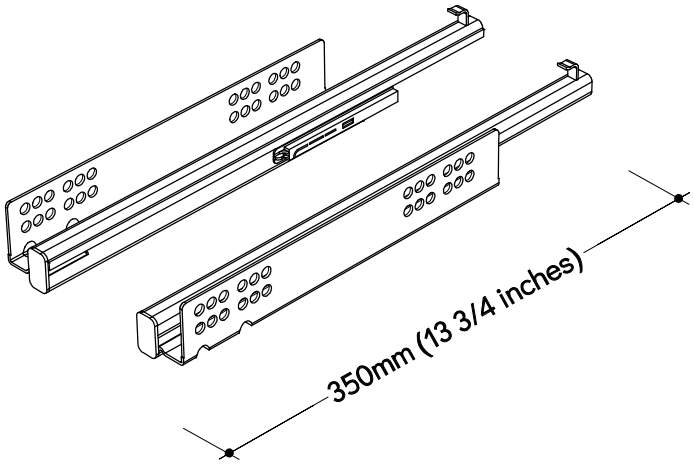


## Required Tools

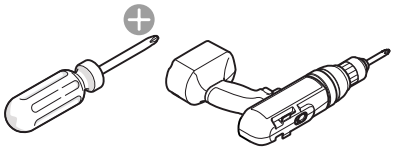

Phillips screwdriver or drill

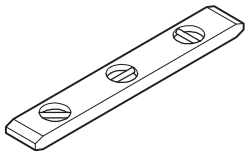

Level

**GENERAL GUIDELINES:**

- Install slides using the 32 mm system holes in the cabinet side panels.
- Always use the same hole positions on both sides.
- Ensure all components are level and aligned before securing.
- Do not force the drawer into position – realign if resistance is felt.

**DRAWER SPACING REFERENCE:**

- Shallow Drawer → Mount slide screws in every 6th hole position.
  Example: If one slide is mounted in hole position 1, the next drawer slide mounts in hole position 6.
- Standard Drawer → Mount slide screws in every 8th hole position.
  Example: If one slide is mounted in hole position 1, the next drawer slide mounts in hole position 8.

Spacing is measured vertically from one slide mounting position to the next.

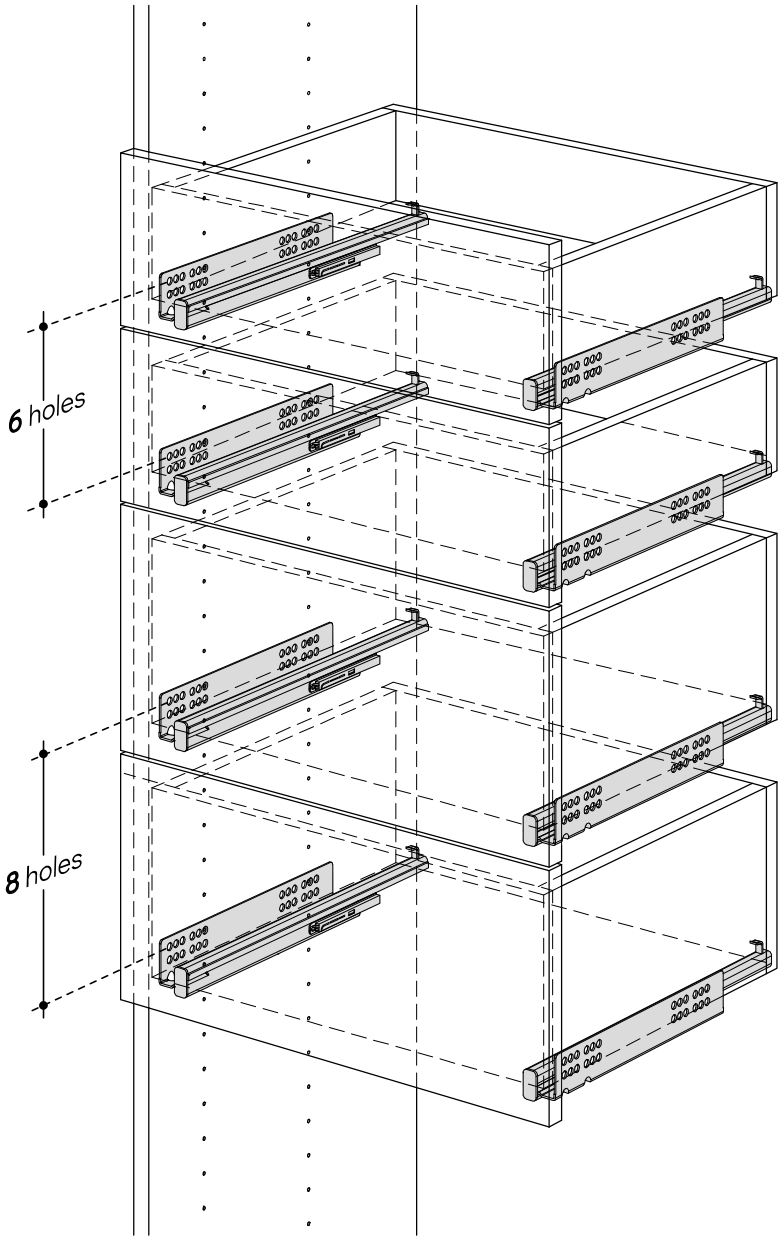

## Installation Steps

**DRAWER SLIDE TYPE REFERENCE:**

- 350 mm slides → Standard drawer boxes.
- 320 mm slides → Reveal-style drawer boxes.

Slide mounting positions vary by type. Refer to the illustrations for correct hole placement.

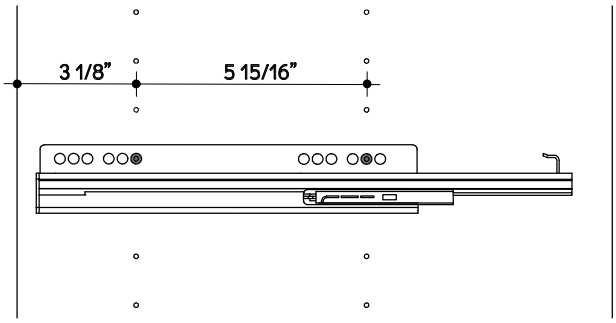


*350 mm slides position for Standard drawer boxes*

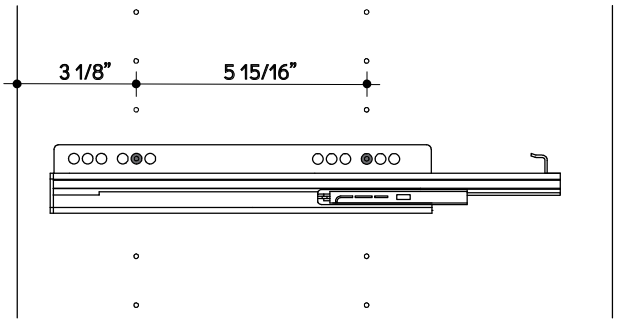


*320 mm slides position for Reveal-style drawer boxes*

### 1 Install Cabinet Slides

- Identify the left and right slides.
- Position each slide against the vertical side panel.
- Align the slide with the selected 32 mm system holes.
- Secure using the provided screws.

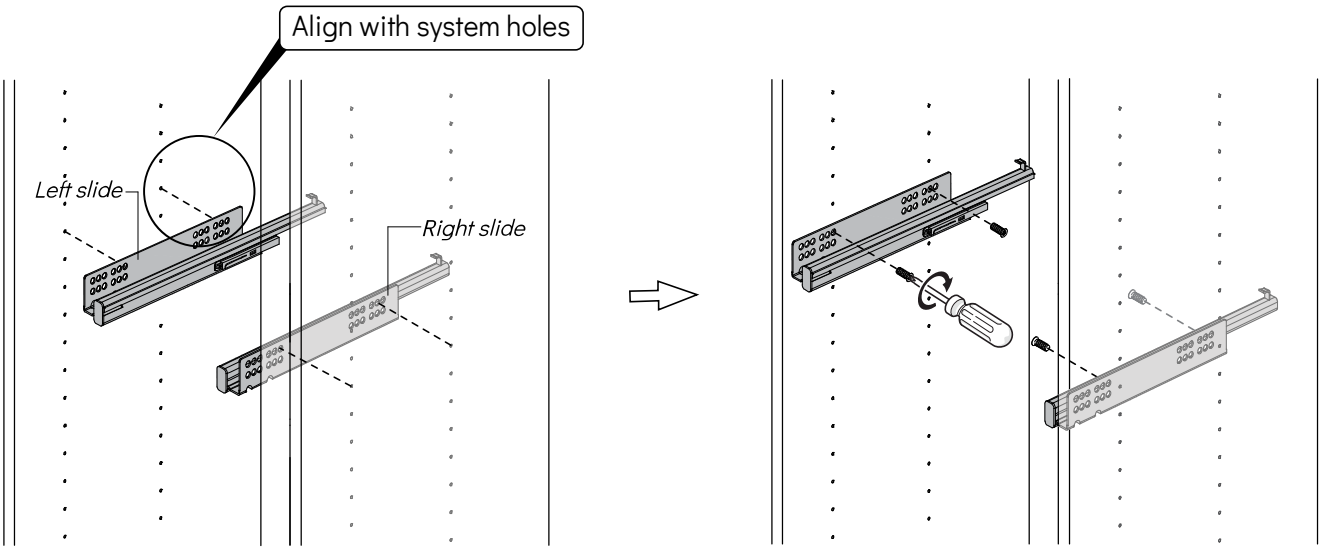


**Important:**

- Slides must be installed level and parallel.
- Hole positions must match on both sides.

## Installation Steps

### 2 Insert Drawer Box

- Fully extend both drawer slides.
- Place the drawer box onto the extended slides.
- Press the drawer catch on one side.
- Push the slide hook into the drawer until engaged.

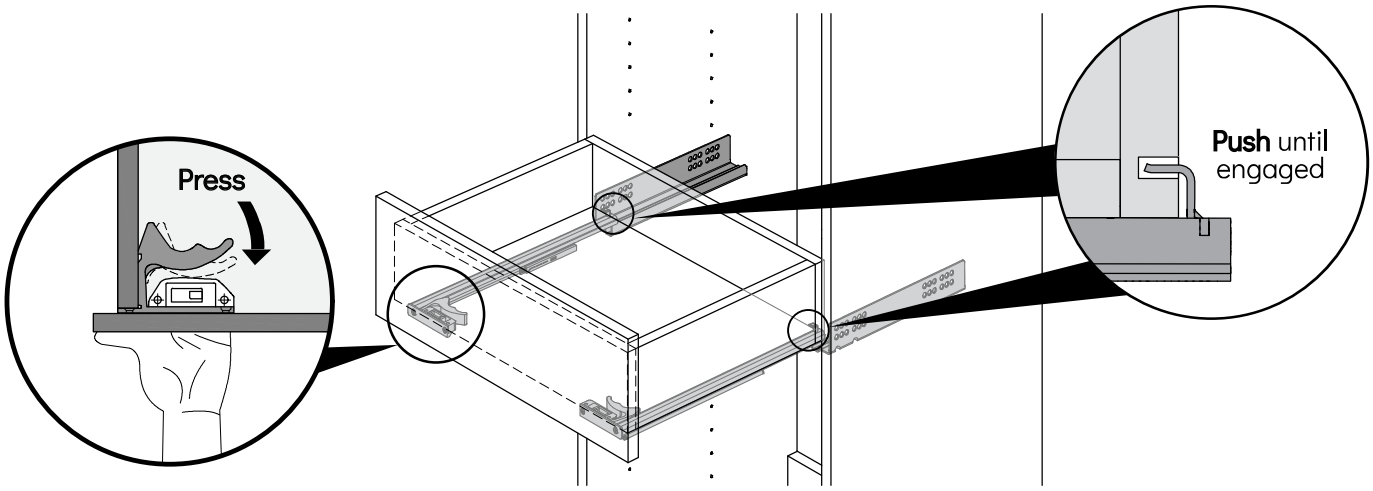


- Repeat on the opposite side.
- Close the Drawer.

**Important:**

- Insert evenly on both sides.
- Do not tilt or force the drawer during installation.

### 3 Verify Operation

- Open and close the drawer several times.
- Confirm smooth movement and full closing.

If resistance is felt:

- Remove the drawer.
- Check slide alignment and hole positioning.

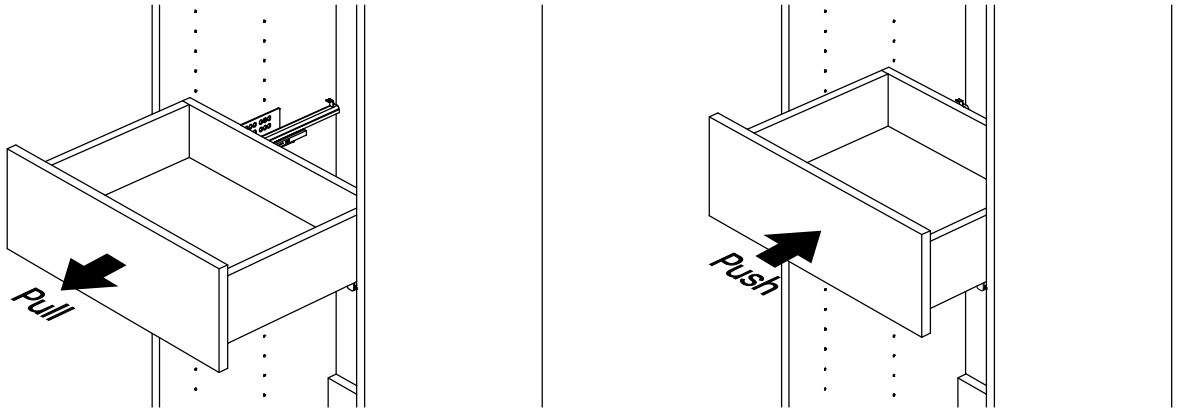

## Installation Steps

### 4 Height Adjustment

- Use the adjustment mechanism underneath the drawer.
- Turn to raise or lower the drawer front.

Adjustment range: ±2 mm.

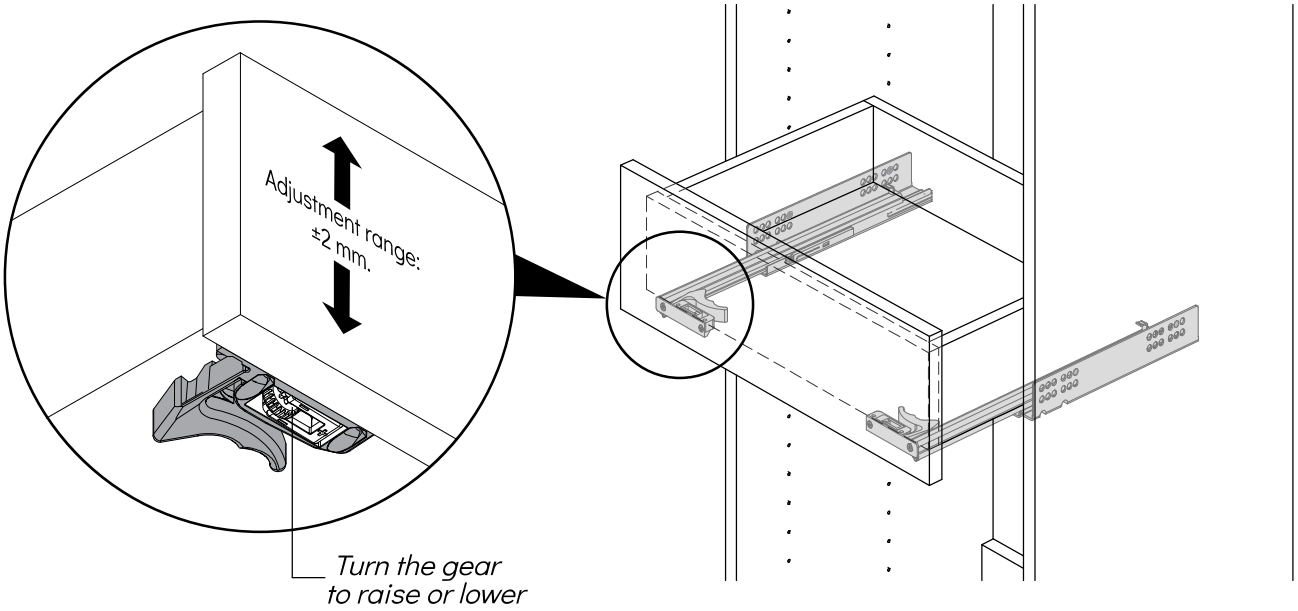


### 5 REMOVE DRAWER

- Fully open the drawer.
- Locate the release levers underneath the drawer front.
- Press both release levers.
- Lift the drawer slightly.
- Pull the drawer out

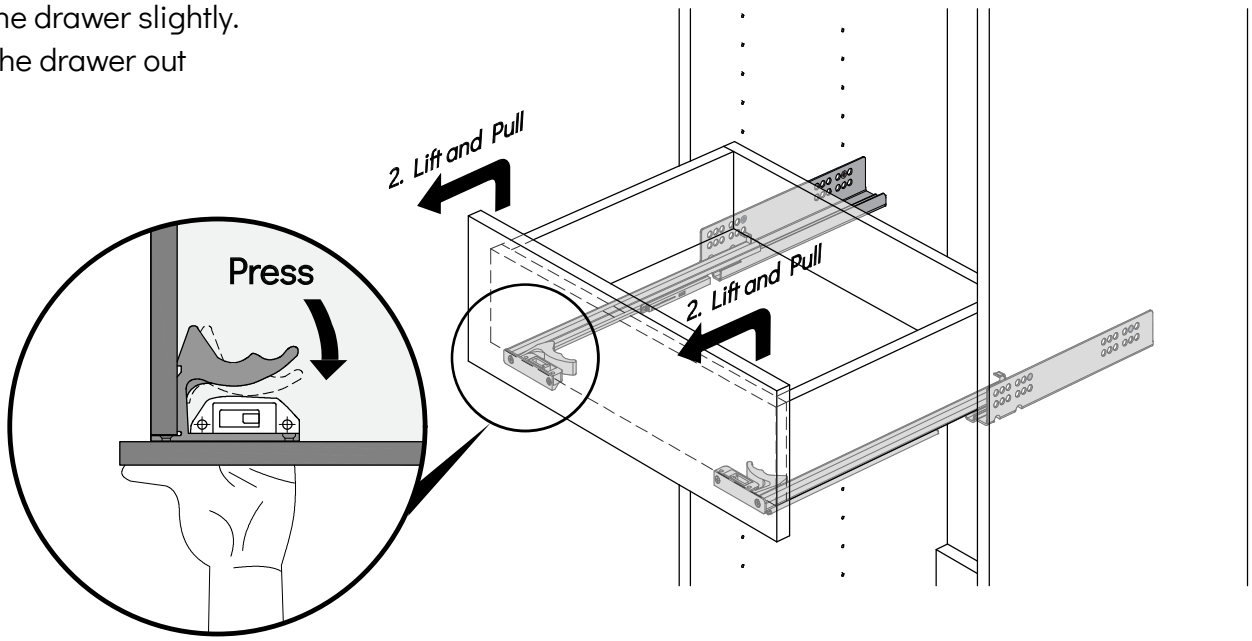

## SHELF & SHOE SHELF INSTALLATION GUIDE

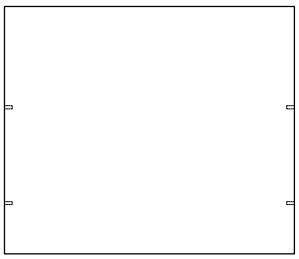

Flat Mount Shelf (9)

Flat Mount Shelf V2 (10)

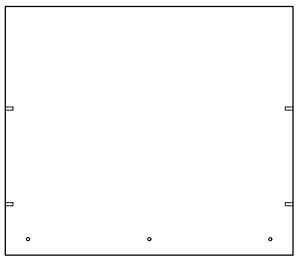

Shoe Shelf (29)

Shoe Shelf V2 (30)

## Installation Steps

### FLAT SHELF INSTALLATION

**1 Install Support Pins**

- Insert shelf support pins into the predrilled holes on both vertical panels at the desired height.
- Ensure all pins are level and fully seated.

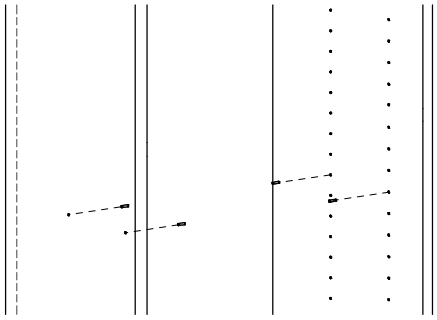

**2 Install Shelf**

Align the shelf notches with the pins and lower it into place until fully seated and stable.

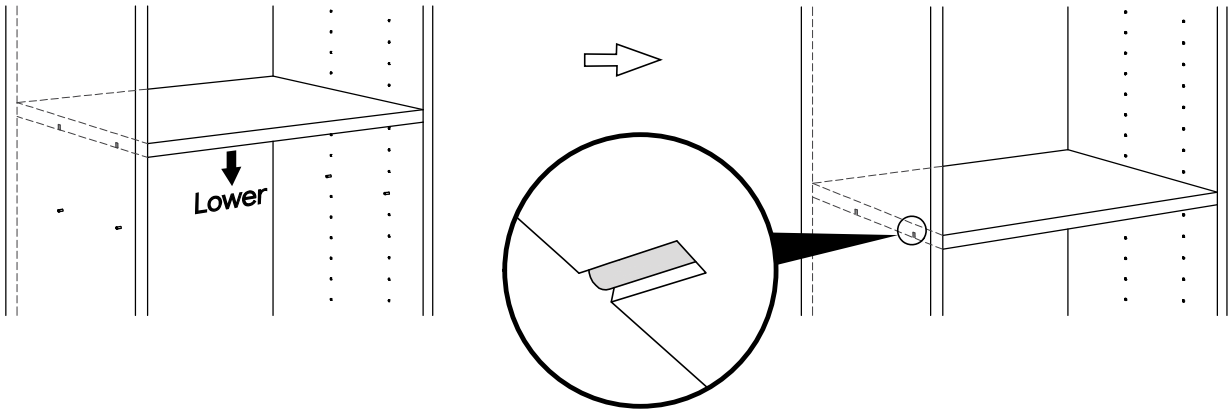

## Installation Steps

## SHOE SHELF INSTALLATION

### 1 Install Support Pins

Insert shelf support pins at two different vertical positions—rear pins higher, front pins lower to create an angle.

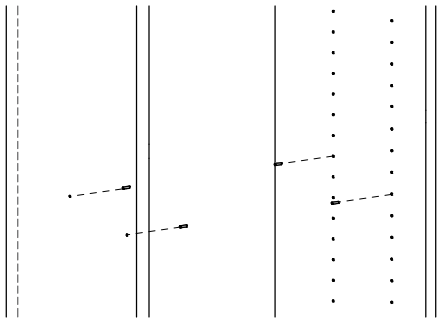

### 2 Install Shoe Guards

Attach shoe guards to the shelf before placing it into the cabinet.

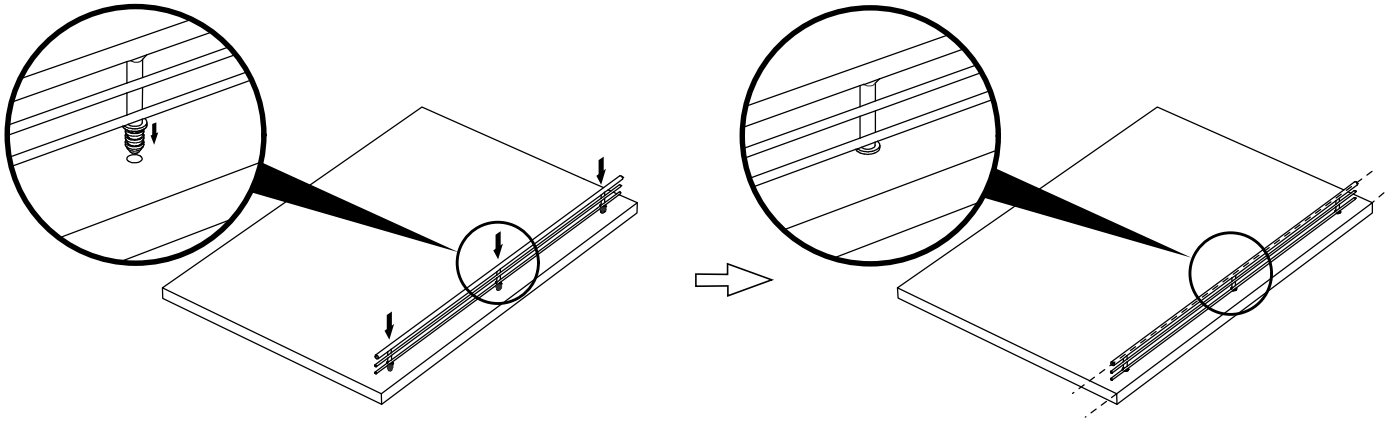

- Press each rod into the holes until fully seated.
- Confirm the rail sits flush and parallel to the shelf front.

### 3 Install Shelf

Align the shelf notches with the pins and lower it into place until fully seated inthe angled position.

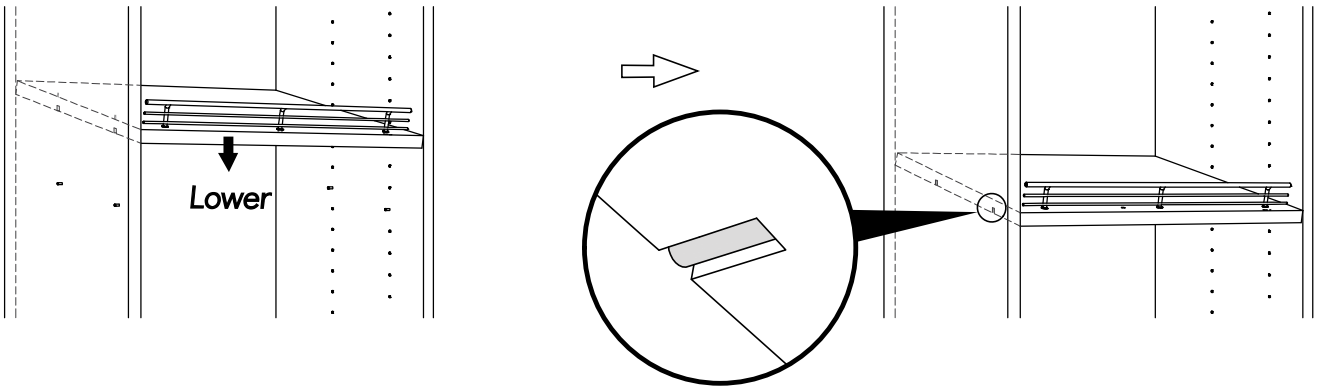

# INSTALLATION GUIDE – HANGING ROD

- This guide covers installation and setup instructions for The Rod Company's TRC-A-HR-RR-14 closet hanging rods.

## Installation Instructions

### 1 Install the Mounting Brackets

- Locate the pre-drilled 5mm holes on the interior faces of the closet's vertical panels.

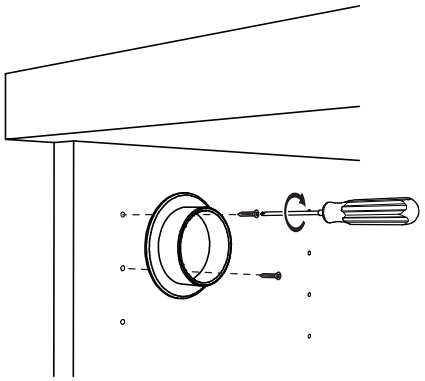

*( Left Panel )*

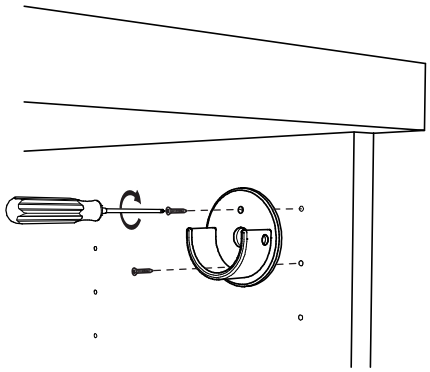

*( Right Panel )*

If your closet is not pre-drilled, position the brackets at the desired height, mark the mounting hole locations, and drill 3/32 in (2.5 mm) pilot holes.

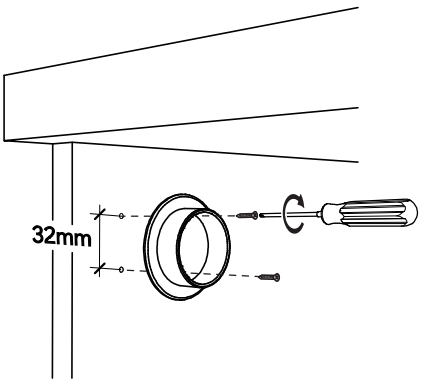


*( Left Panel )*

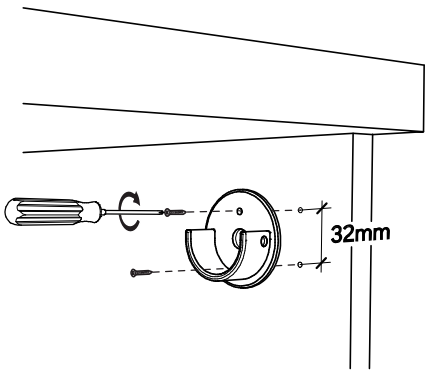


*( Right Panel )*

- Align each mounting bracket with these holes.
- Secure the brackets using the supplied 5mm screws, and tighten firmly with a screwdriver.

⚠ In a typical installation, the rod is positioned 2.5 in (64mm) below the top panel.

## Installation Instructions

### 2 Attach the Hanging Rod

- Position the TRC-HR rod so that each end aligns with the installed brackets.
- Press the rod into the bracket openings until fully seated.

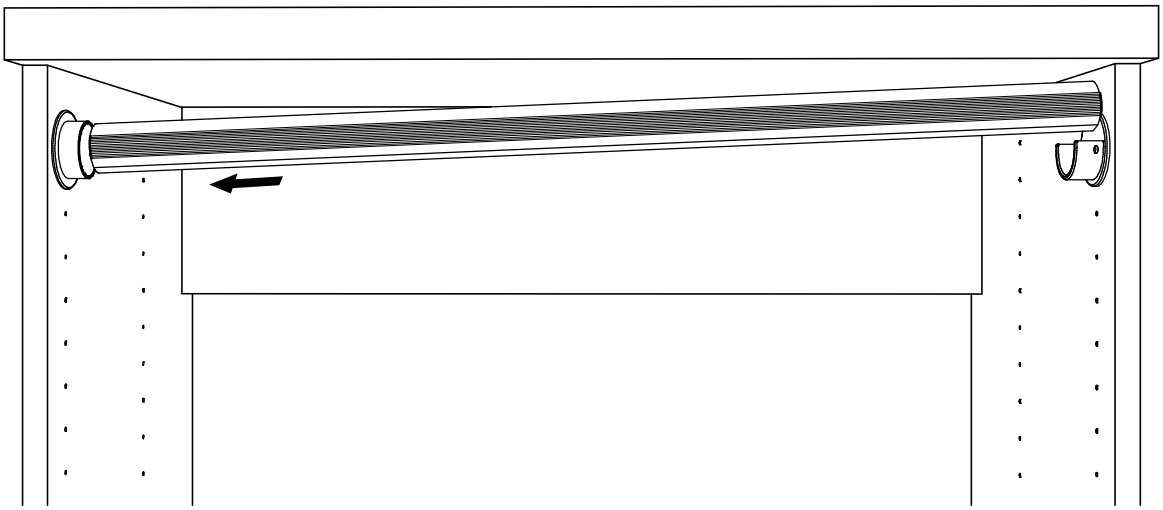
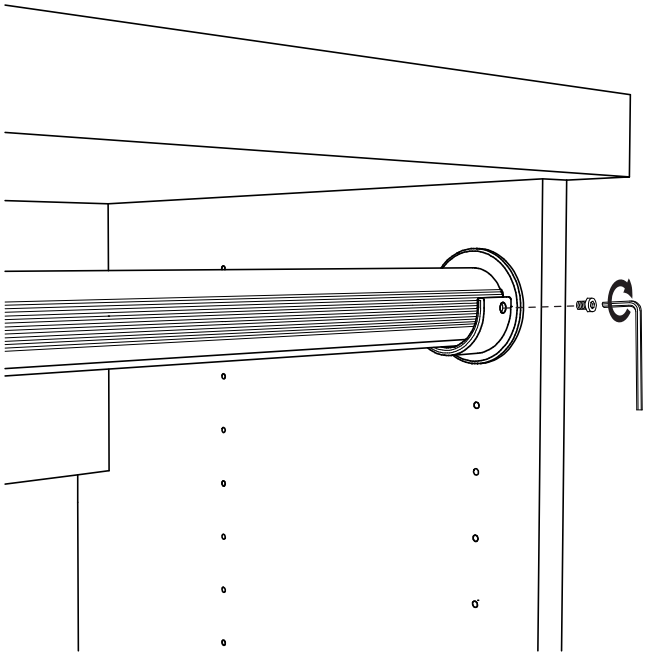
- Use the provided hex key to tighten the set screw on each bracket, locking the rod securely.