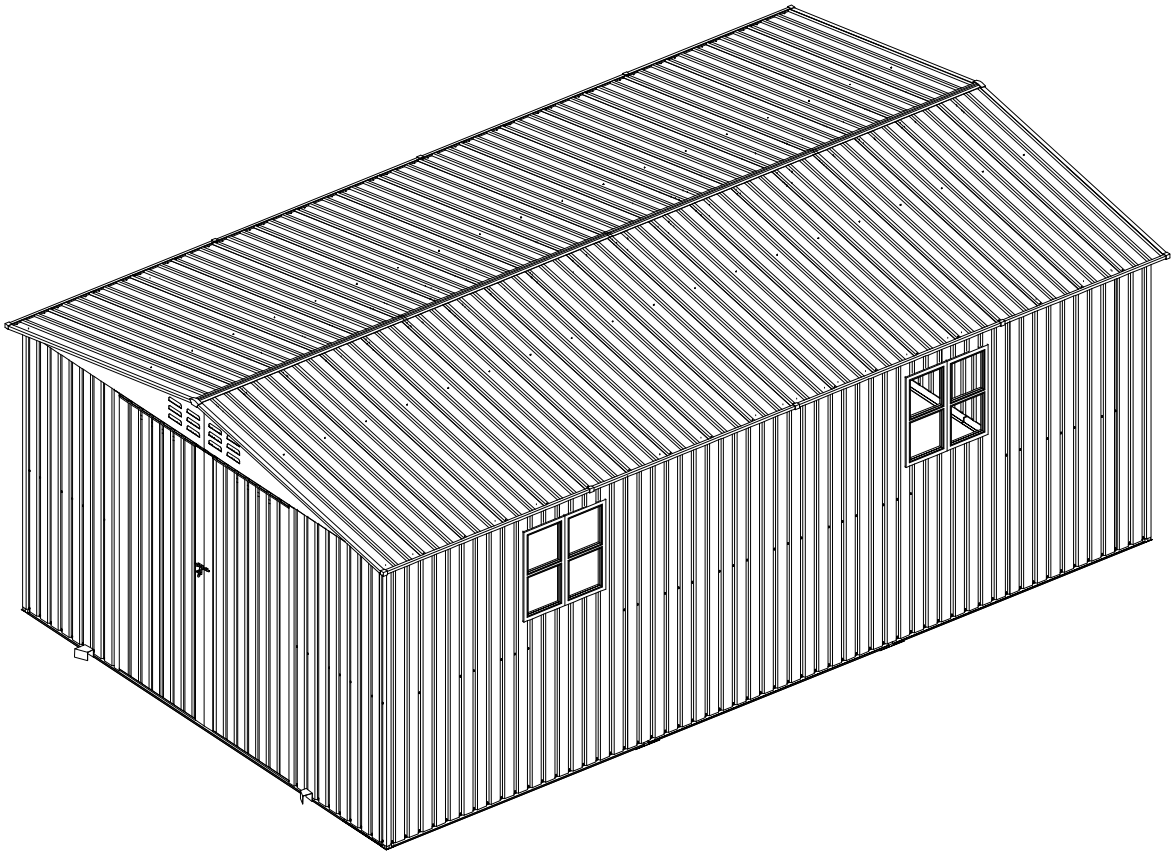
ASSEMBLY INSTRUCTIONS

METAL GARDEN SHED

12(W)x20(D)FT WITH WINDOWS



EASYHAWKservice@outlook.com

Our team is available 24/7 to help with any product questions. Contact us anytime!

Recommended to wear gloves to avoid scratches.
Please read the instructions COMPLETELY before assembly.

After opening the package, if you notice a slight deformation in the wall panels, there's no need for concern.
Our material is flexible and can be manually bent back into place.

ASSEMBLY PREPARATION

Please check local building codes regarding footings, location and other requirements before beginning construction. Study and understand this owner's manual of important information and helpful tips for easier and more enjoyable assembly.

Assembly instructions:

Reviewing all instructions and the appropriate information before you begin, make sure following the step sequence carefully for successful results.

Flooring base:

The site must be prepared so that the base of the shed is level all round and checking with a spirit level is required.
The base can be constructed by treated timber or concrete,in order to stop the moisture getting into the shed,The shed is not designed to be built onto lawn directly.Also the ground will get muddy during rainy days.
If a concrete pad is made,it is important that this slopes towards the edges to prevent water ingress.Time must be allowed for any concrete or cement to dry before building the shed on top.
Bases can also be constructed from bricks,blocks,or mounted on a concrete pad.
The bricks or blocks should be cemented onto firm and level concrete footings and the greenhouse frame drilled and screwed to the base.

Parts and Parts List:

Before you start, separate and identify all the parts and hardware to be sure that you have all the necessary parts for your building (refer to the Parts List Page).

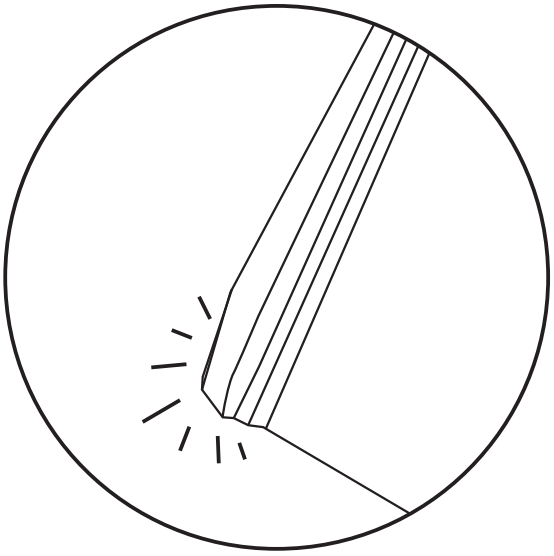
Do not attempt to assemble the building if parts are missing because any building left partially assembled may be seriously damaged by light winds.

Safety must be put in the No. 1 position:

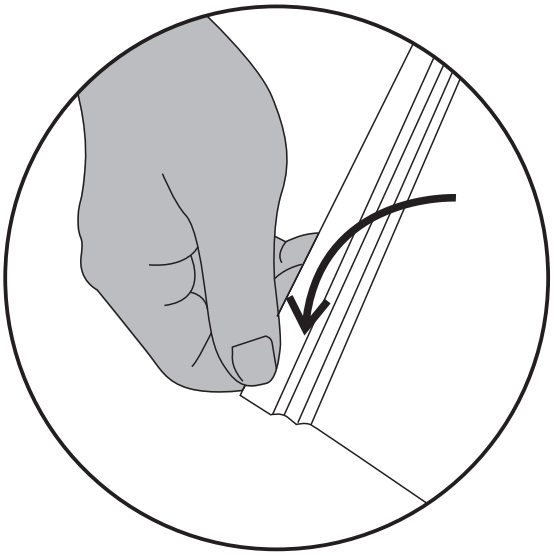
1 Select a dry and calm day for your assembly. Team works (Two or more people) are required during the assembly;
2 Wearing safety gloves, eye protection and long sleeves during the assembly to prevent injury; Pay attention to the sharp edge of some parts;
3 Children and pets are not allowed entering into the construction site;
4 Never concentrate your total weight on the roof of the building. When using a step ladder make sure that it is safety;

Care & Maintenance:

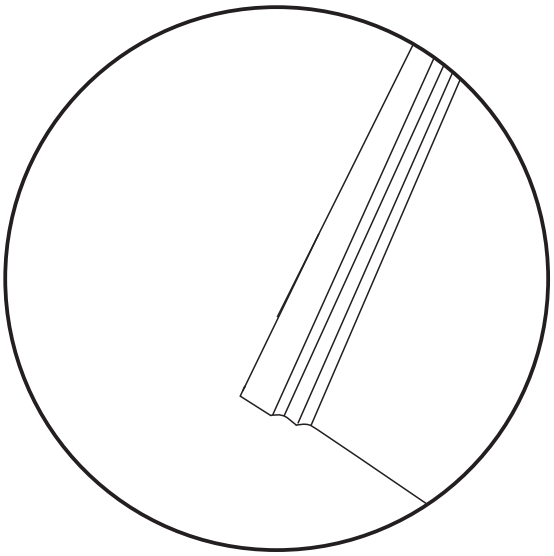
1 Keep the shed clean with soft cloth, use water if necessary;
2 Keep the door tracks clear of dirt and other stuff that prevent them from sliding easily.
3 Clean the snow with necessary tools to make sure it is safe to enter into;
Heavy snow may cause collapse, please make sure safety before entering into.
4 The shed is not made for living but storing stuff.



NOTICE:If there is slight bending on the corners

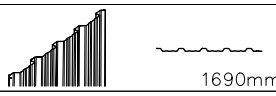
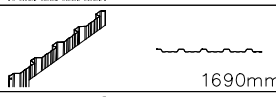
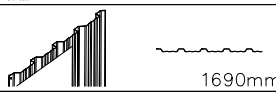


Pls wear gloves and stretch the corners slightly until they are flat

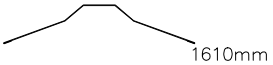
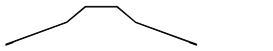
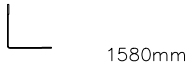
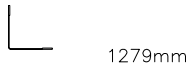


Then the sheets will be normal and there is no effection to the assembling

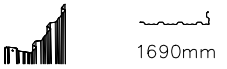
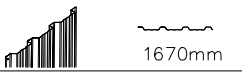
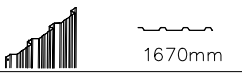
Carton:1/5

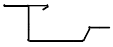
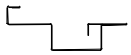
NO.	PART.	Qty.
W5	 1690mm	24
W5L	 1690mm	2
W5R	 1690mm	2

Carton:2/5

NO.	PART.	Qty.
W12	 1890mm	29
18	 1610mm	3
18Z	 1292mm	1
19	 1580mm	4
19L	 1597mm	2
19R	 1279mm	2
20	 1890mm	4
23	 1830mm	1

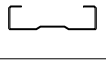
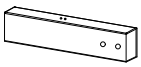
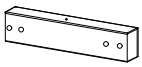
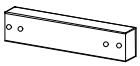
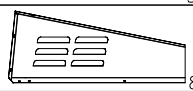
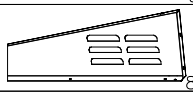
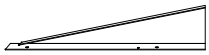
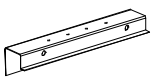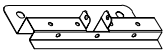
Carton:3/5

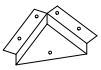
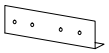
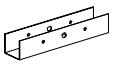
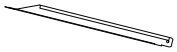
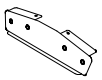
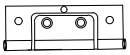
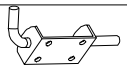
NO.	PART.	Qty.
W12	 1890mm	9
W3	 1690mm	13
W8	 1690mm	4
D1	 1670mm	2
D2	 1670mm	2

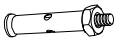
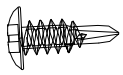
5	 1645mm	4
17L	 1690mm	1
17R	 1690mm	1
17E	 1670mm	2
17F	 1670mm	1
17G	 1670mm	1
22A	 838mm	4

Carton:4/5

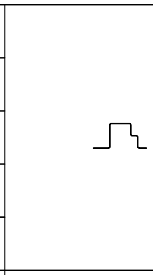
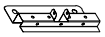
NO.	PART.	Qty.
2L	 1959mm	2
2	 1878mm	2
2R	 1959mm	2
3L	 1762mm	2
3R	 1762mm	2
7B	 1967mm	2
7	 1878mm	2
7F	 1967mm	2
8L	 1769mm	2
8R	 1769mm	2
9F	 2009mm	2
9	 1878mm	1
25	 2009mm	2

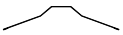
26	 2009mm	2
26Z	 1880mm	2
28	 835mm	2
28D	 983mm	4
5A	 1672mm	4
A6	 1828.2mm	4
A7	 1000mm	4
YE1	596.5mm	2
YE2	 868mm	2
	Carton:5/5	
NO.	PART.	Qty.
21A	 950*188mm	2
21L	 842*352mm	2
21R	 842*352mm	2
21B	 950*188mm	2
WD	 640*318mm	4
PC	 568*254mm	4
Y	 640*318mm	4
	Part Listing	
NO.	PART.	Qty.
4B	 200mm	2
4D	 188*87mm	4

4H	 140*140mm	4
4M	 200*40mm	4
10	 100mm	2
10F	 350mm	2
11L	 350mm	2
11R	 350mm	2
27	 120*148mm	4
27A	 120*148mm	4
30L	 174mm	2
30R	 174mm	2
A1	 93*89mm	4
A2	 93*89mm	4
A3	 124*155mm	4
A4	 124*155mm	4
A5	 265*58mm	4
A8	 167*30mm	8
Y1L		1
Y1R		1
H		4
H1		1
H2		1
H3		2

C		4
F		4
F4		4
F5		2
F7		890
F8		140
F10		6
M8		50
M10		16
S4		1080
S6		180
S7		180
S8		40
S10		30
Gloves		2
Brochures		1

PART LIST

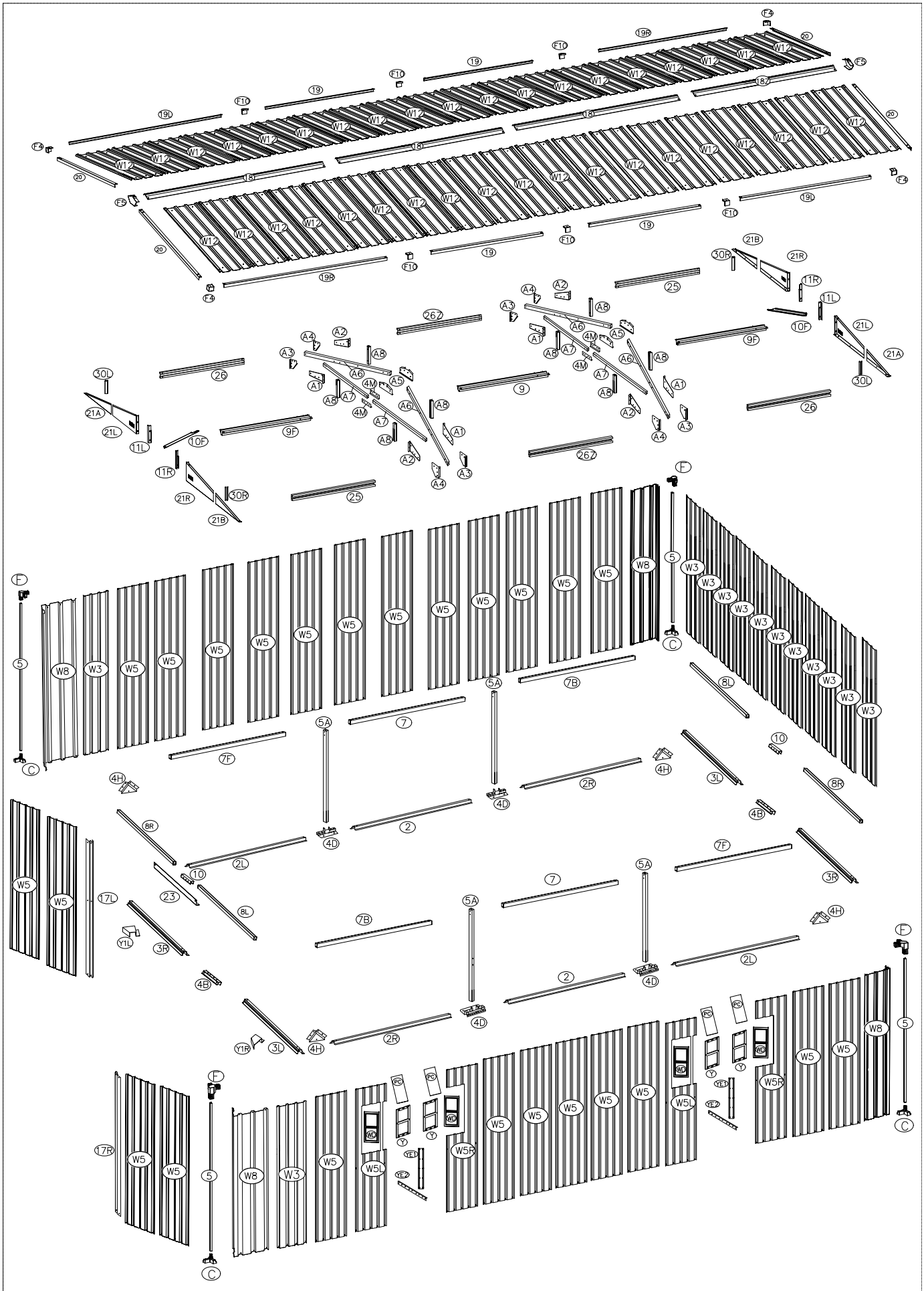
NR.	PART	MM	QTY
UNDER			
2L		1959mm	2
2		1878mm	2
2R		1959mm	2
3L		1762mm	2
3R		1762mm	2
4B		200mm	2
4D		188*87mm	4
4H		140*140mm	4
Y1L			1
Y1R			1
MIDDLE			
5		1645mm	4
7B		1967mm	2
7		1878mm	2
7F		1967mm	2
8L		1769mm	2
8R		1769mm	2
10		100mm	2
W3		1690mm	13
W5		1690mm	24
W5L		1690mm	2
W5R		1690mm	2
W8		1690mm	4
5A		1672mm	4
TOP1			
21A		950*188mm	2
21L		842*352mm	2
21R		842*352mm	2
21B		950*188mm	2
A1		93*89mm	4
A2		93*89mm	4

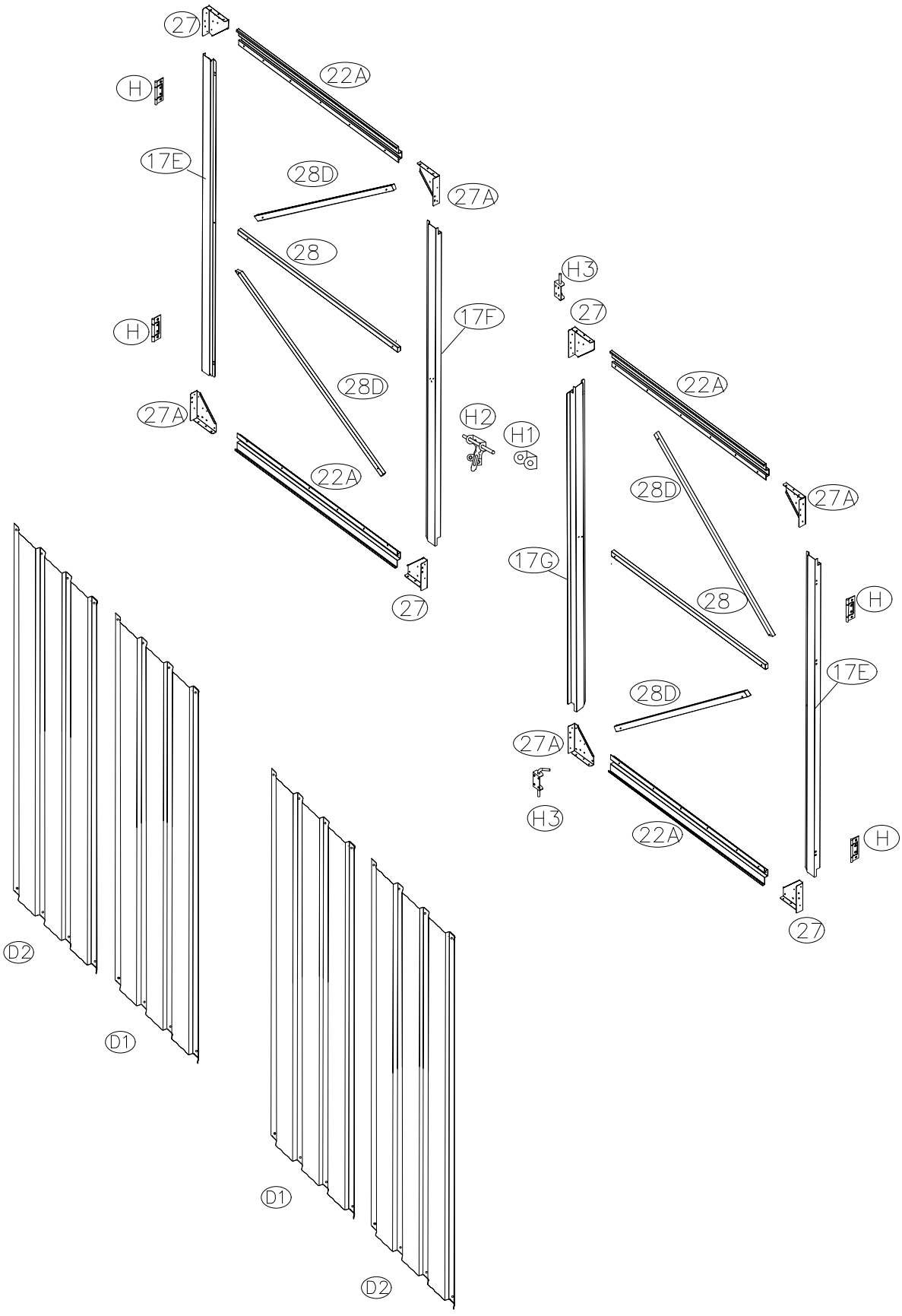
NR.	PART	MM	QTY
A3		124*155mm	4
A4		124*155mm	4
A5		265*58mm	4
A6		1828.2mm	4
A7		1000mm	4
A8		167*30mm	8
4M		200*40mm	4
9F		2009mm	2
9		1878mm	1
10F		350mm	2
11L		350mm	2
11R		350mm	2
25		2009mm	2
26		2009mm	2
26Z		1880mm	2
30L		174mm	2
30R		174mm	2
	TOP2		
W12		1890mm	38
18		1610mm	3
18Z		1292mm	1
19		1580mm	4
19L		1597mm	2
19R		1279mm	2
20		1890mm	4
23		1830mm	1
WD		640*318mm	4
PC		568*254mm	4
Y		640*318mm	4
YE1		596.5mm	2
YE2		868mm	2

PART LIST

NR.	PART	MM	QTY
FRONT DOOR			
17L		1690mm	1
17R		1690mm	1
17E		1670mm	2
17F		1670mm	1
17G		1670mm	1
22A		838mm	4
27		120*148mm	4
27A		120*148mm	4
28		835mm	2
28D		983mm	4
D1		1670mm	2
D2		1670mm	2
ANNEX			
H			4
H1			1
H2			1
H3			2
C			4
F			4
F4			4
F5			2
F7			890
F8			140
F10			6
M8			50
M10			16
S4			1080
S6			180
S7			180
S8			40
S10			30

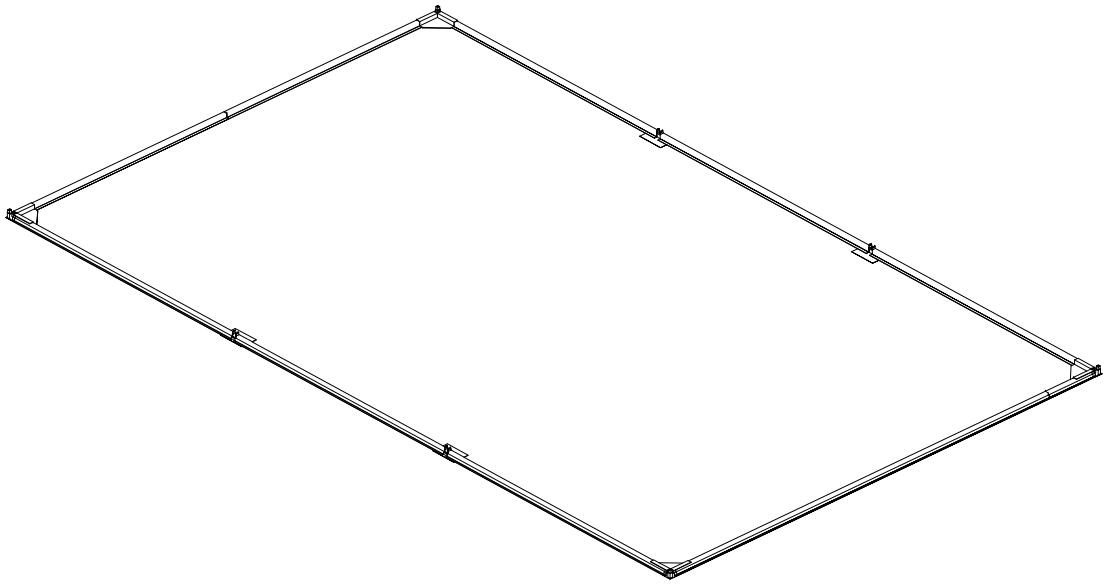
NR.	PART	MM	QTY
Gloves			2
Brochures			1


F4
F10
F5
19R
19L
19
18
20
W12
21B
21R
30R
11R
11L
25
26
10F
9F
21L
21A
30L
9
A1
A2
A3
A4
A5
A6
A7
A8
4M
F
C
5
W8
W3
W5
5A
7B
8L
7
7F
4H
2R
3L
8R
4D
4B
2
10
2L
8R
W5
17L
23
Y1L
3R
Y1R
17R
W5L
W5R
PC
WC
Y
YE1
YE2


27
22A
H
17E
28D
27A
28
H
17F
28D
27A
H2
H1
22A
27
H3
27
22A
28D
27A
17G
28
H
17E
28D
27A
H3
22A
H
27
D2
D1
D1
D2

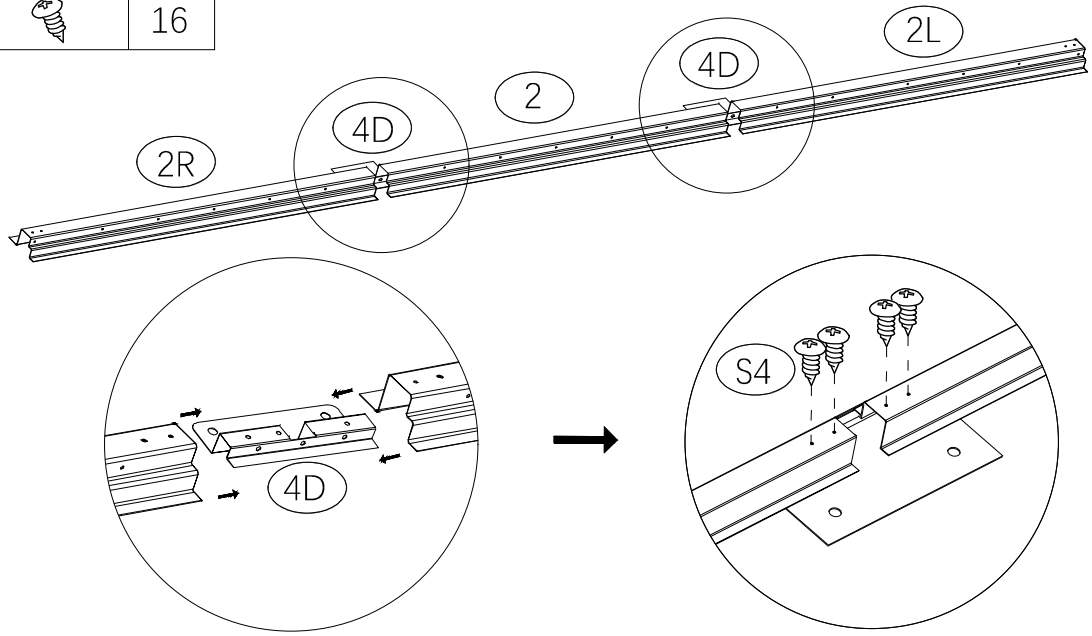
Part 1 :

Foundation Installation



STEP 1

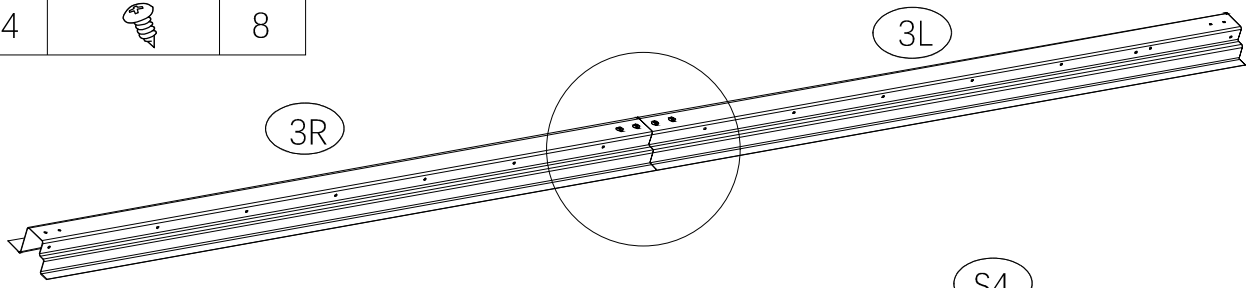
2L		2
2		2
2R		2
4D		4
S4		16

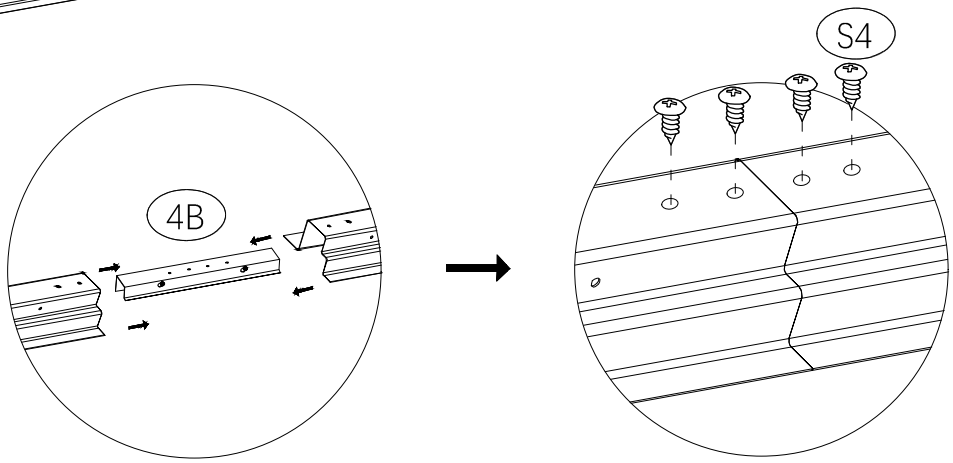


X2

STEP 2

3L		2
3R		2
4B		2
S4		8

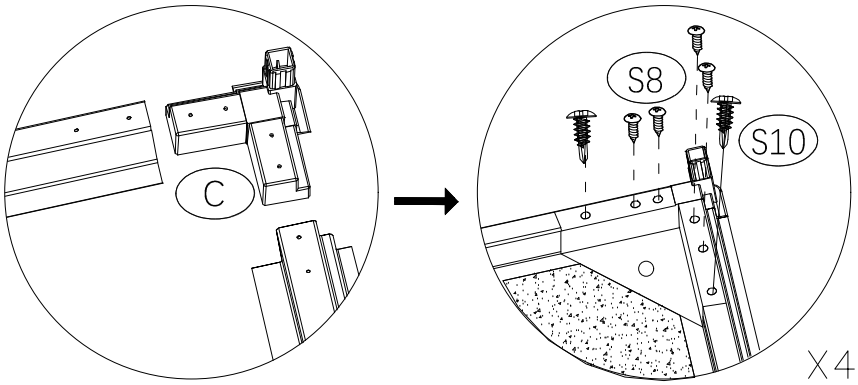




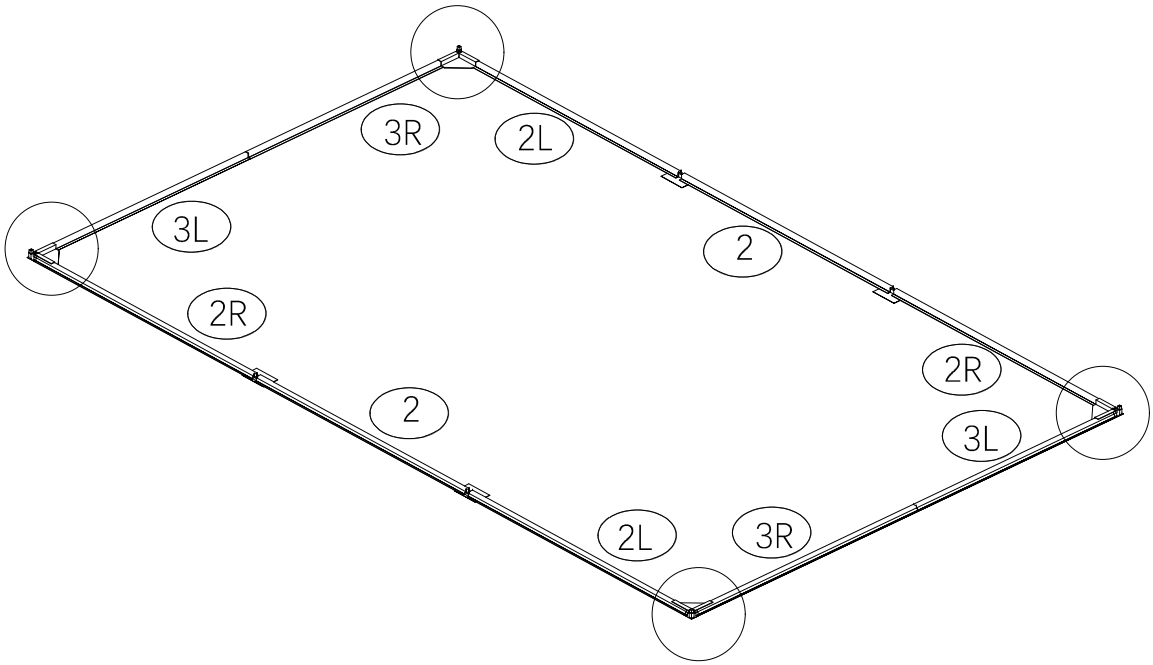
X2

STEP 3

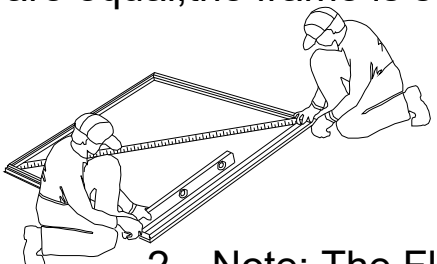
C		4
4H		4
S4		4
S8		16
S10		8



X4



1、Note: When diagonal measurements are equal,the frame is square.

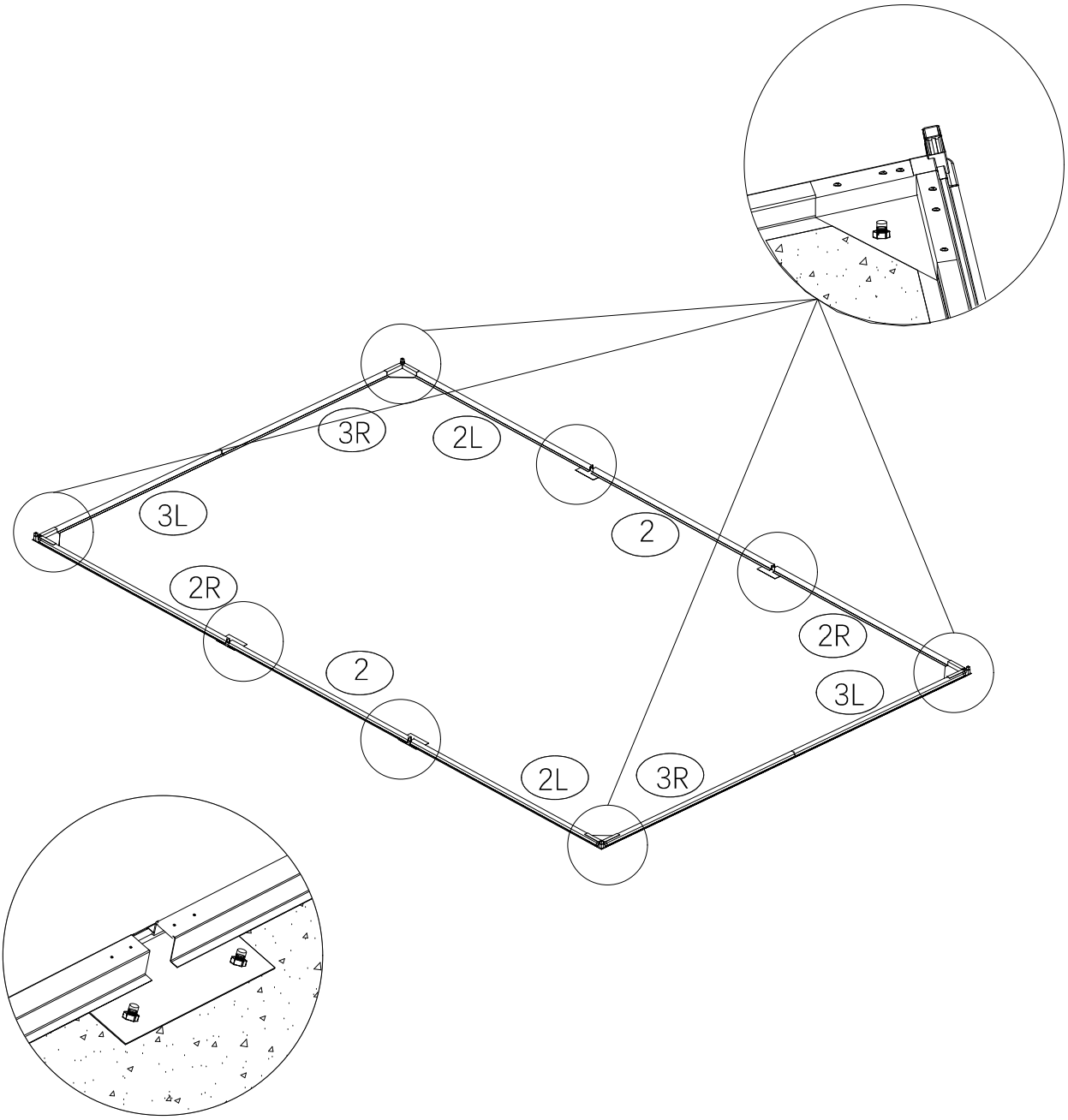


2、Note: The Floor Frame must be BOTH square AND level or the holes will not line up properly.

X2

M10		12

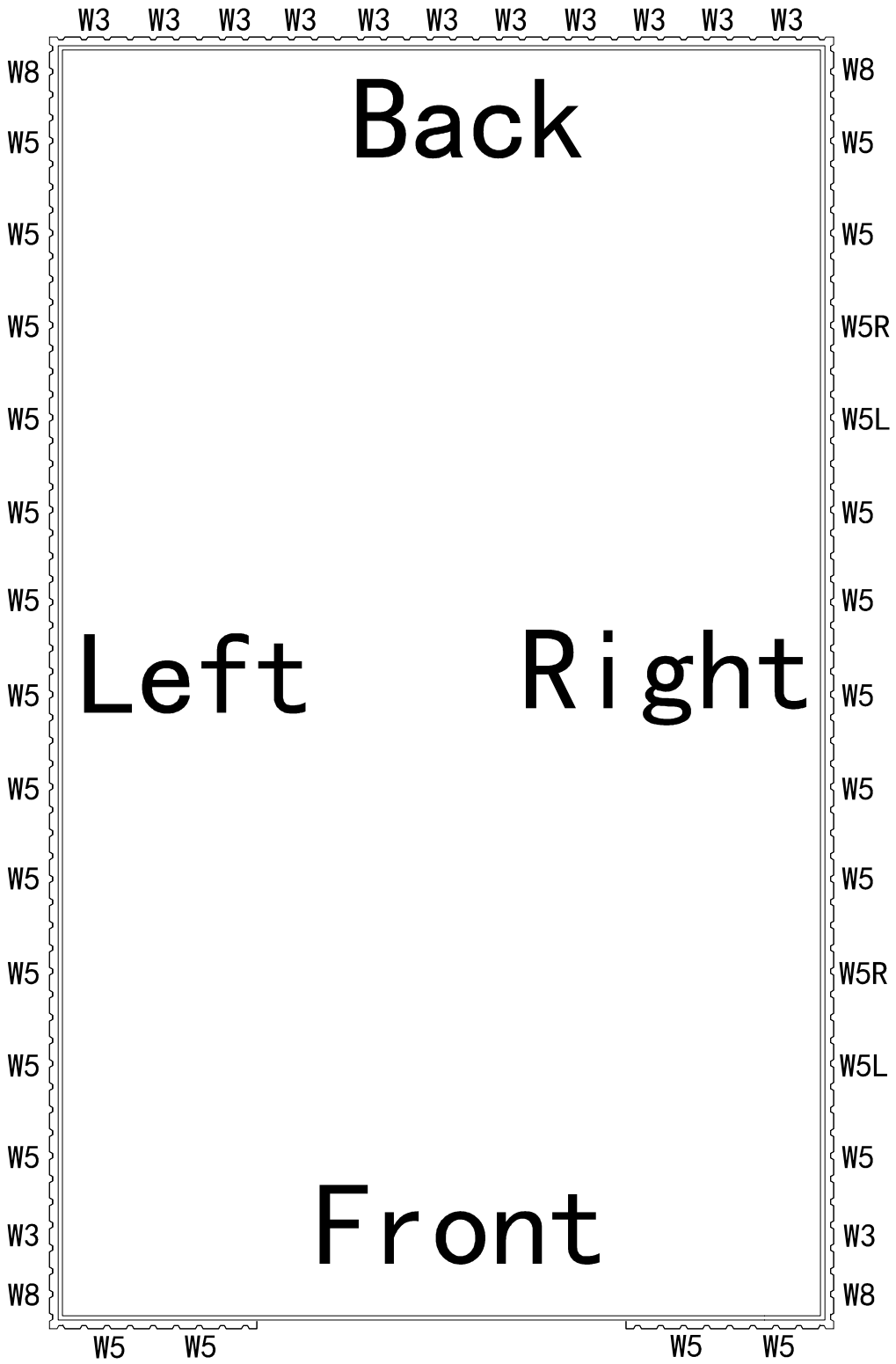
STEP 4



Note: Fix M10 after determining the diagonal length

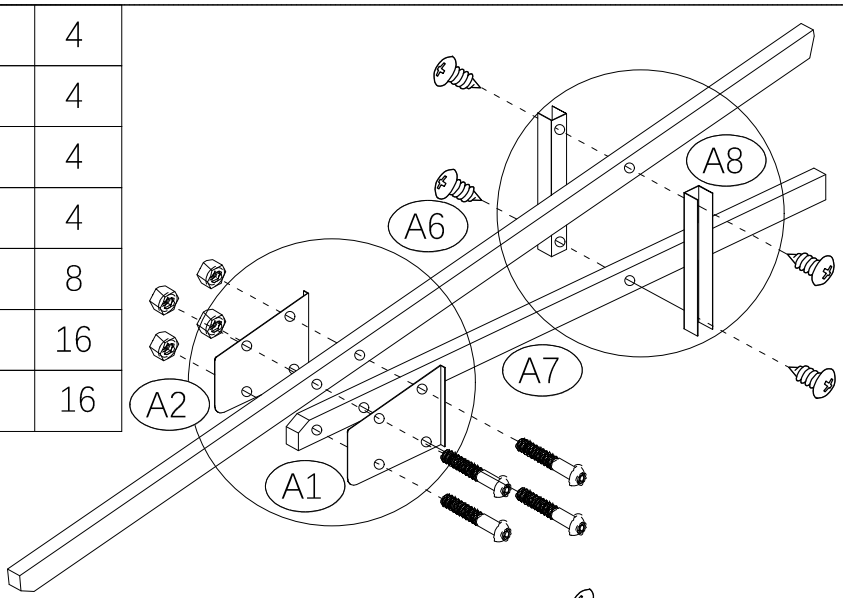
Part 2 :

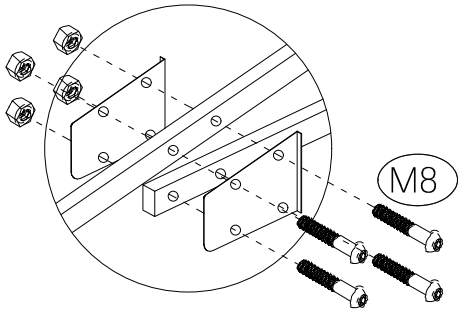
Wall Installation

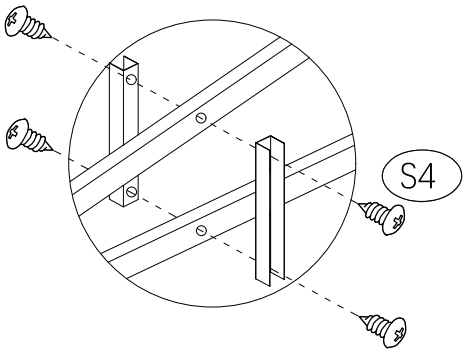


A1		4
A2		4
A6		4
A7		4
A8		8
M8		16
S4		16

STEP 5



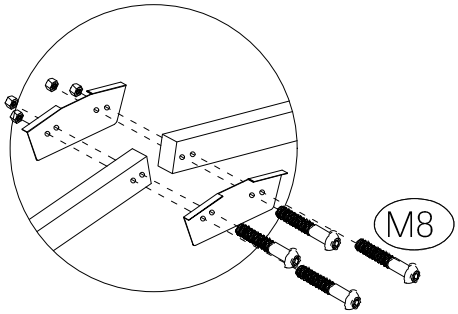


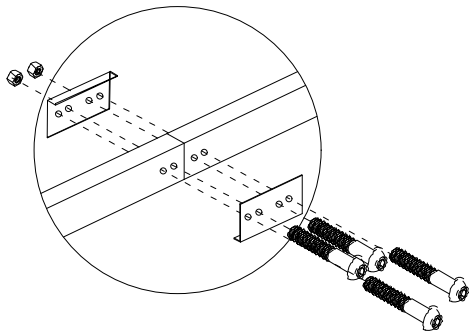


X4

A5		4
4M		4
M8		16

STEP 6

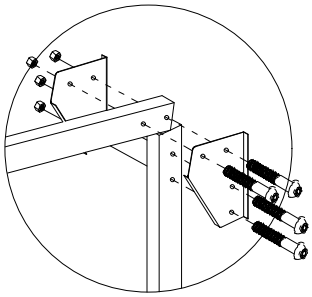


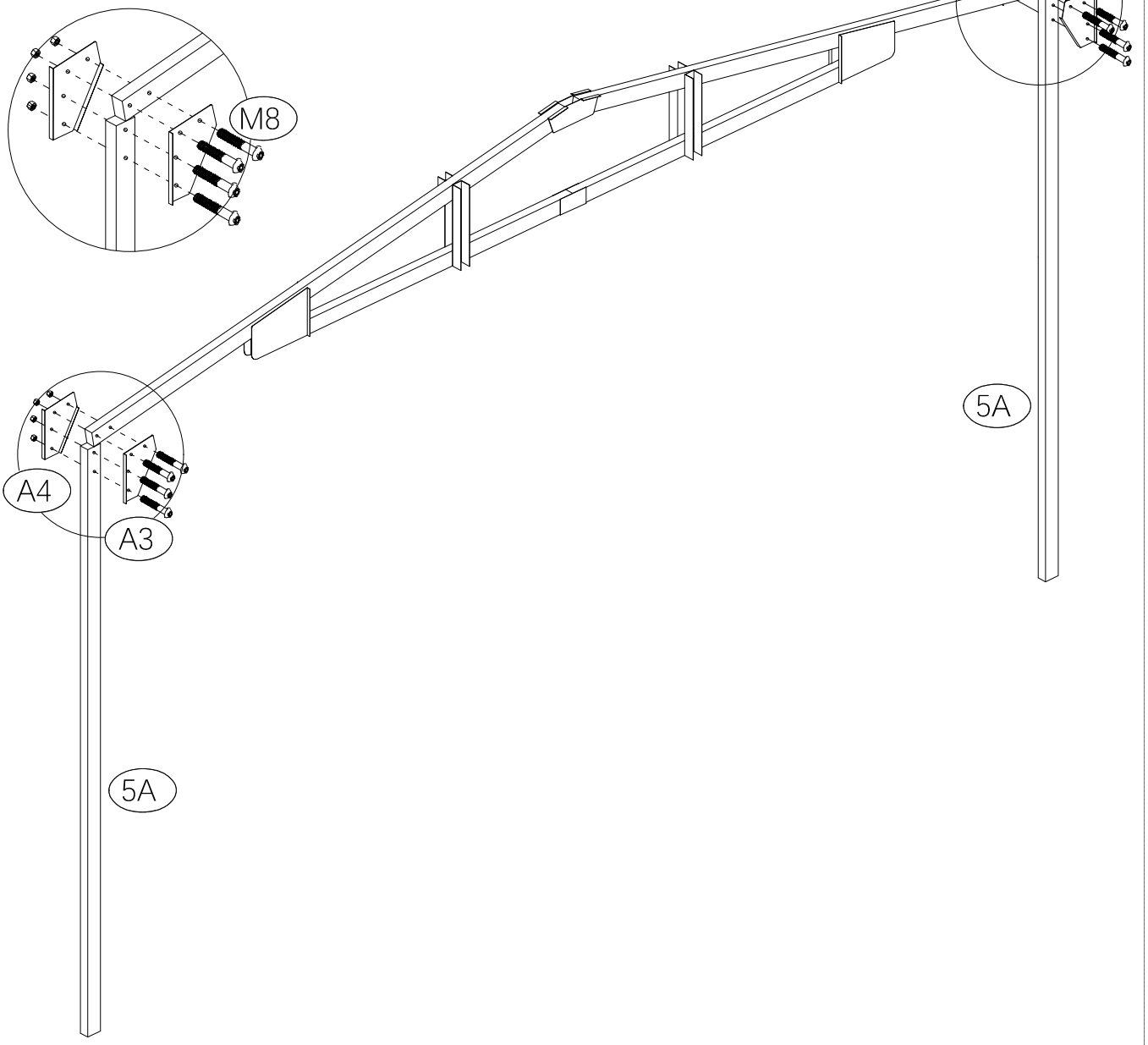


X2

A3		4
A4		4
5A		4
M8		16

STEP 7

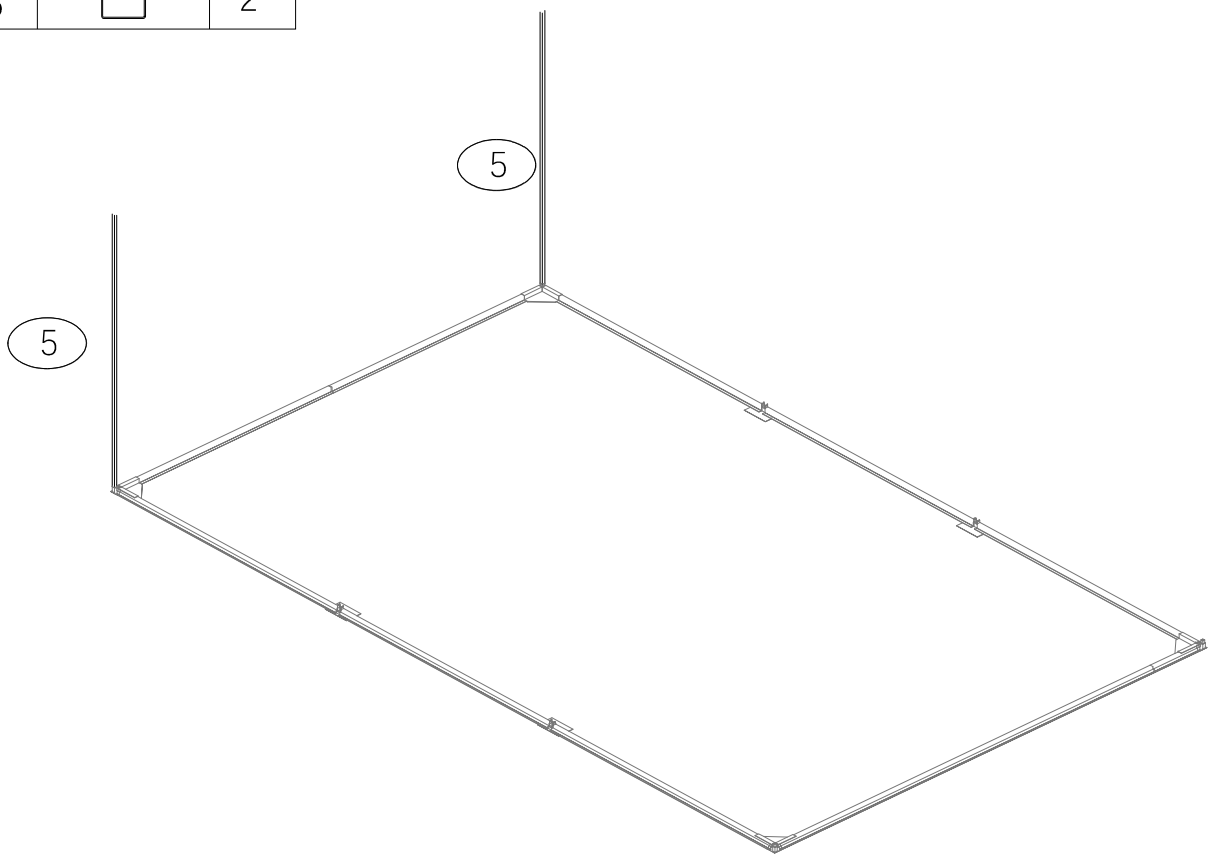




X2

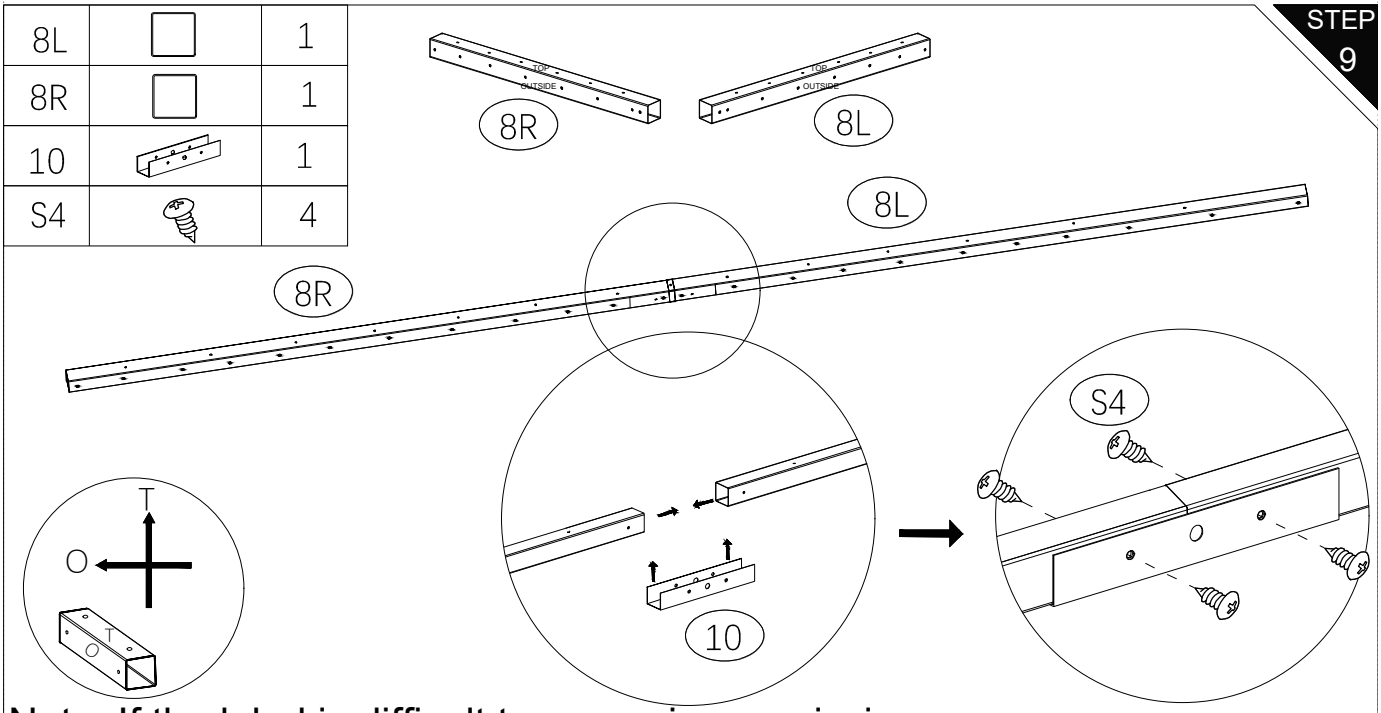
STEP 8

5		2



STEP 9

8L		1
8R		1
10		1
S4		4

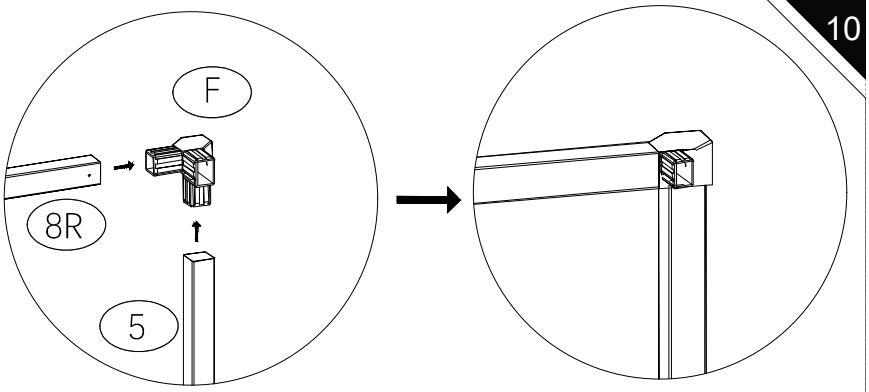


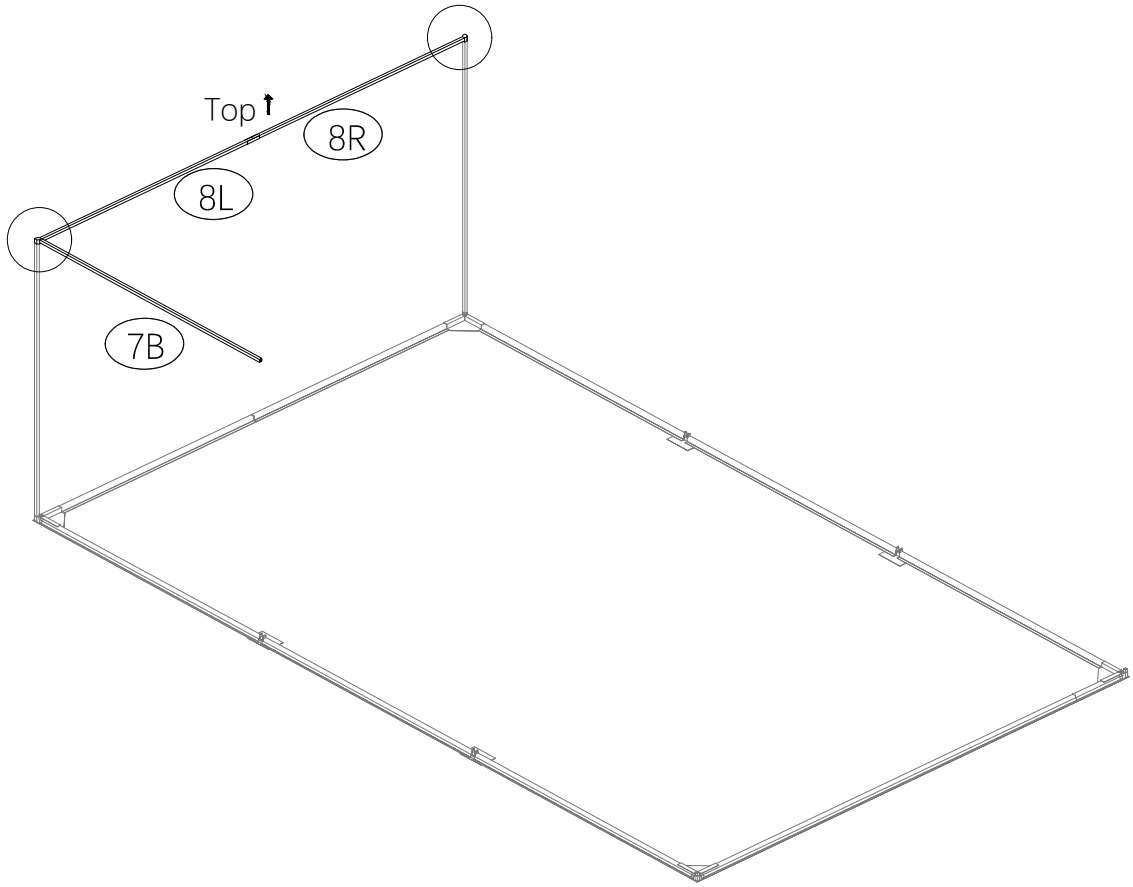
Note: If the label is difficult to recognize or missing, please refer to the hole positions indicated in the instruction manual for installation.

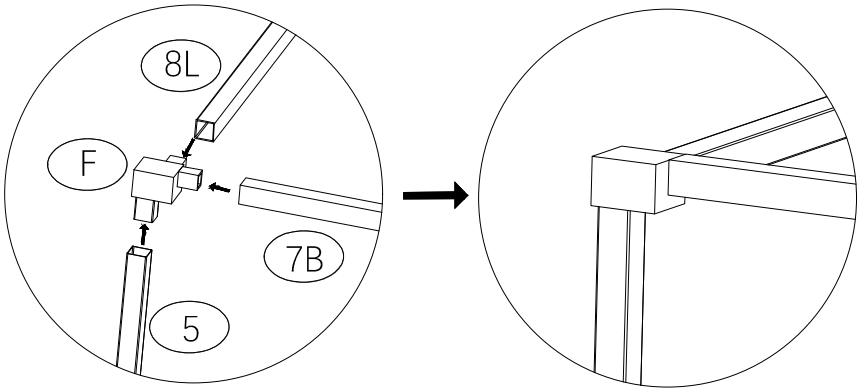
Note: The side with the TOP(T) label should face up, and the side with the OUTSIDE(O) label should face outward.

F		2
7B		1

STEP 10

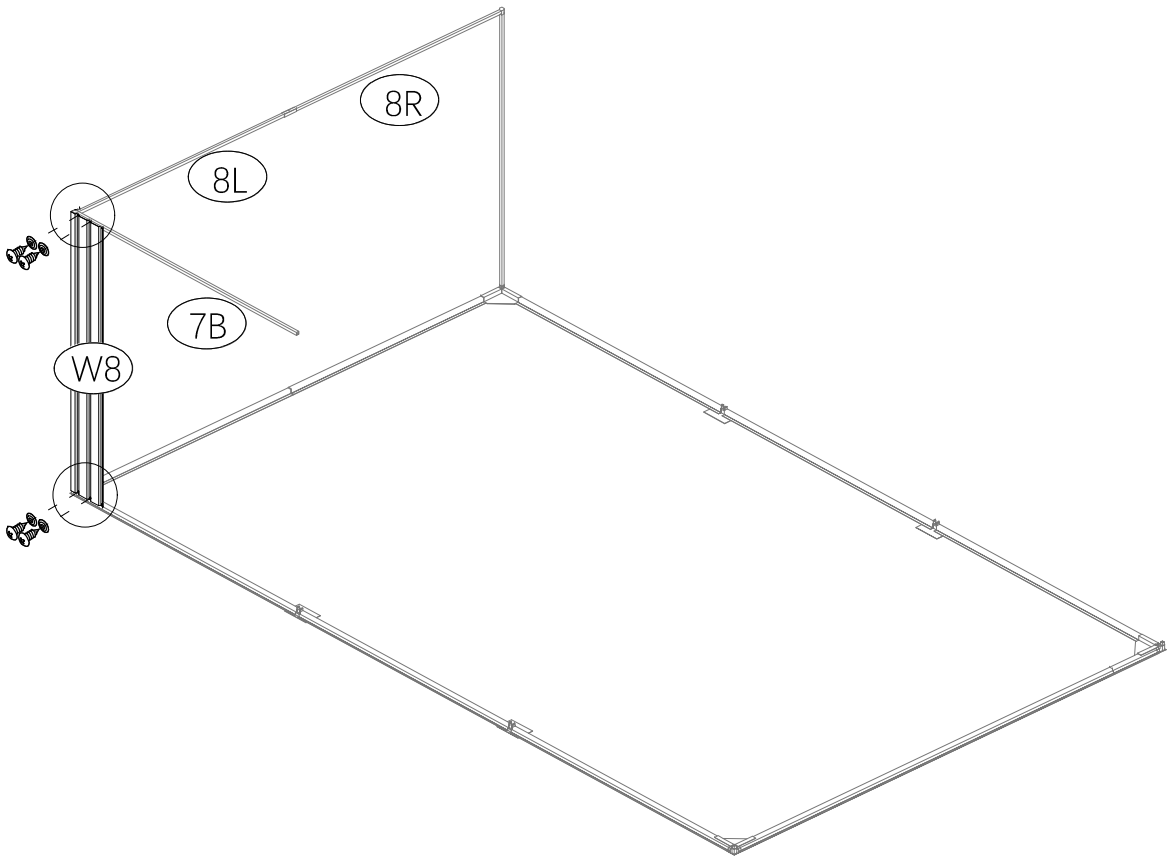


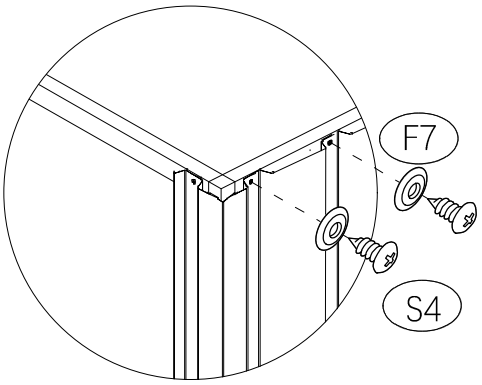


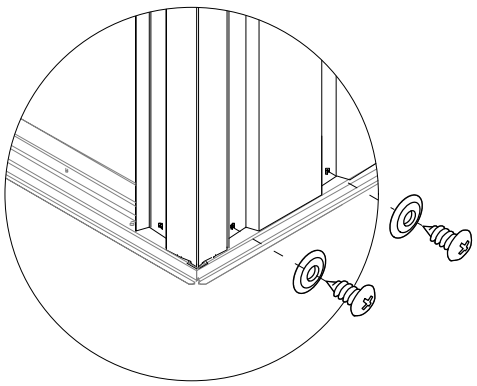


W8		1
S4		4
F7		4

STEP 11

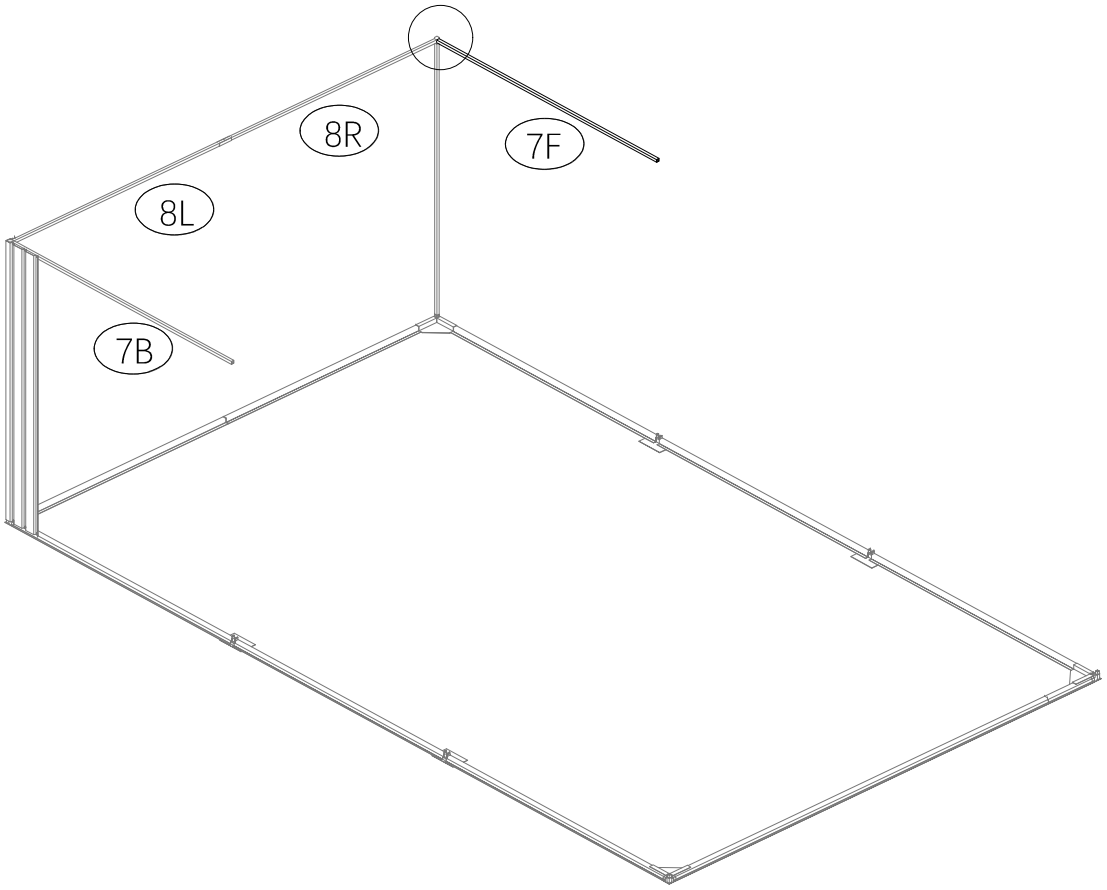


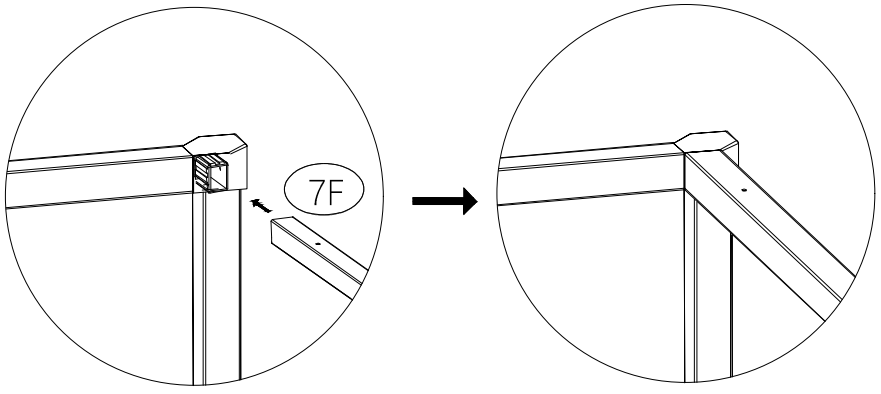


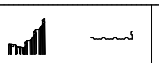


7F		1

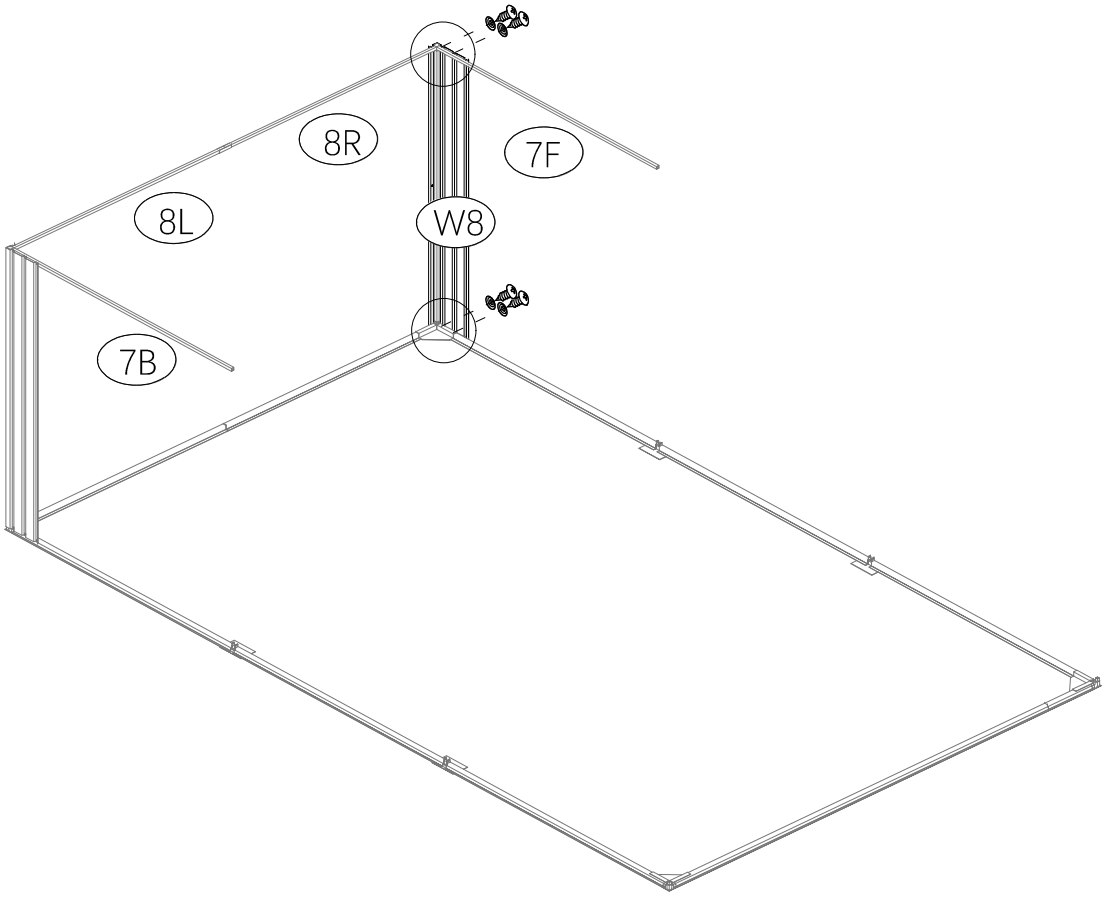
STEP 12

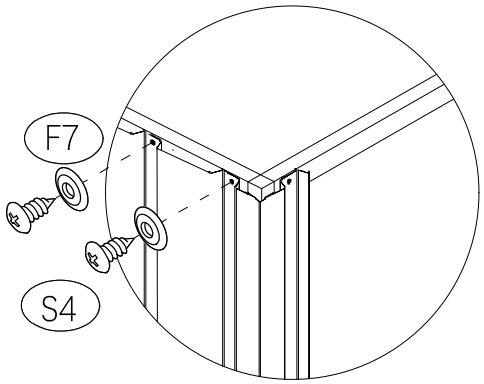


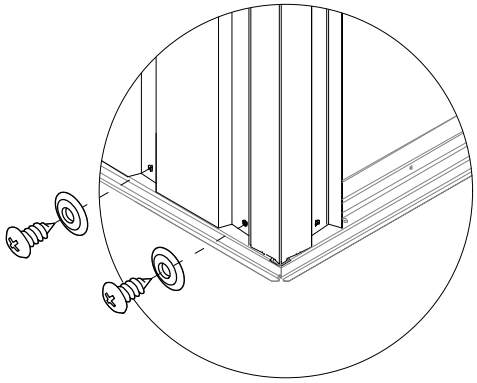


W8		1
S4		4
F7		4

STEP 13

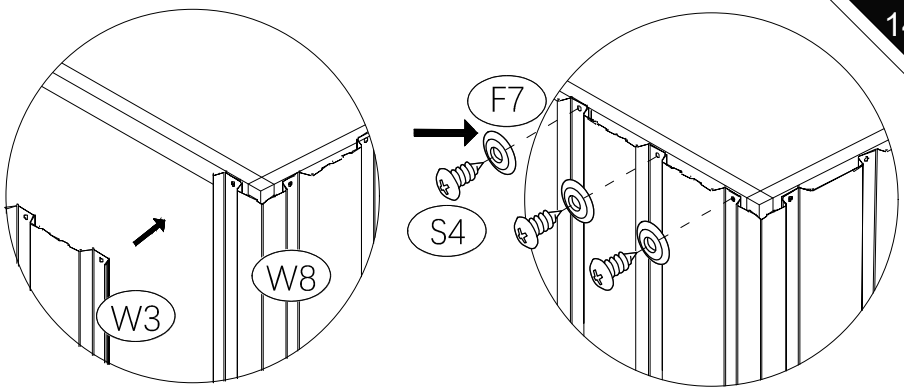


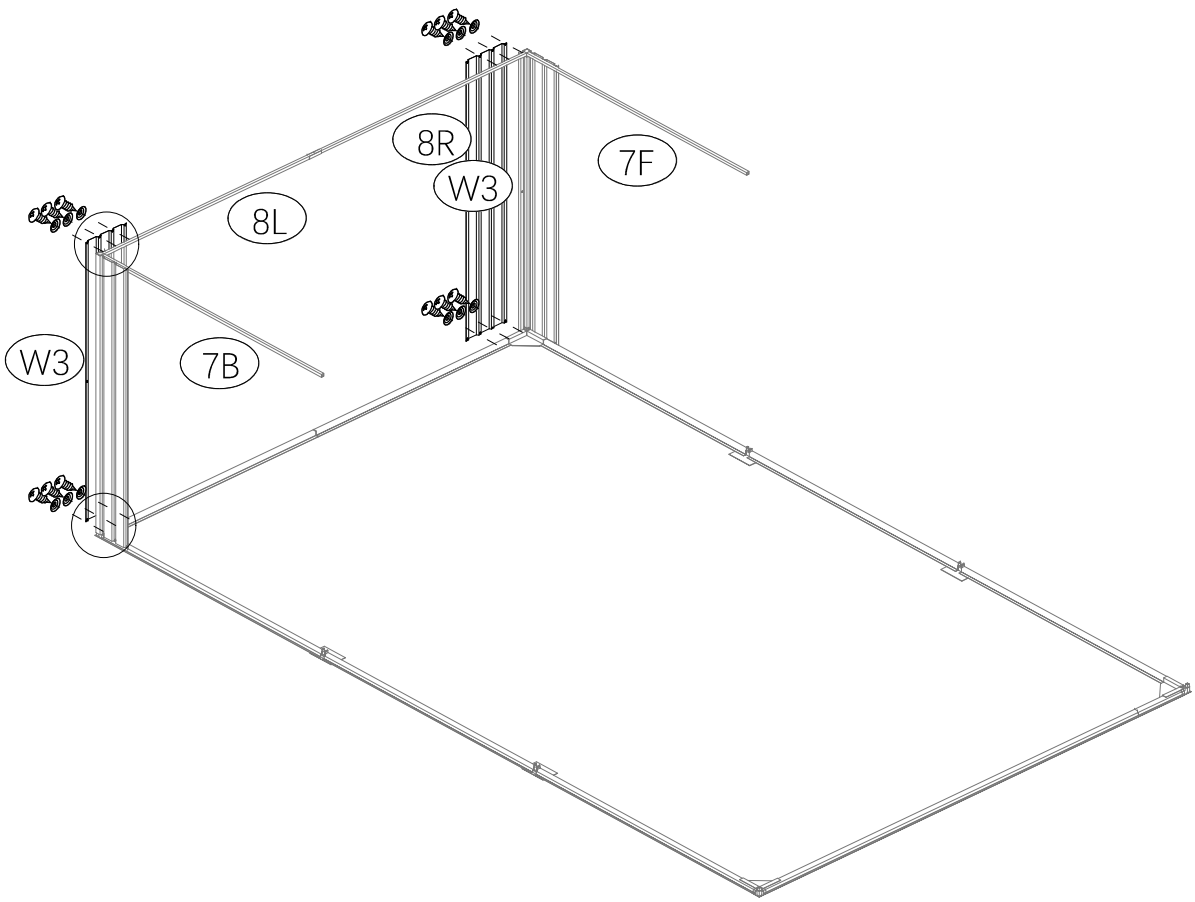


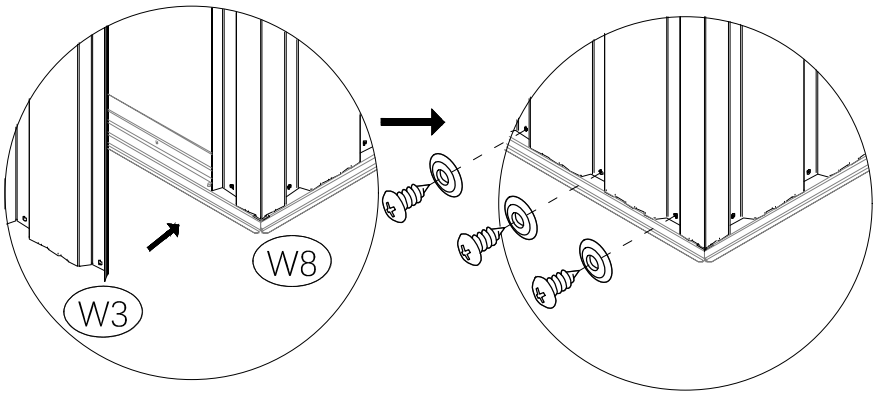


W3		2
S4		12
F7		12

STEP 14

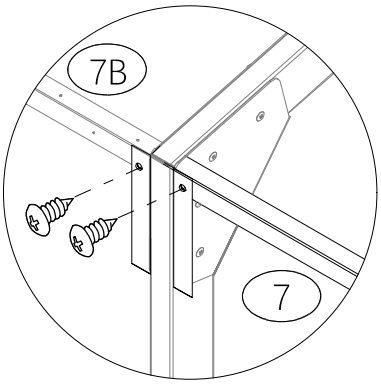


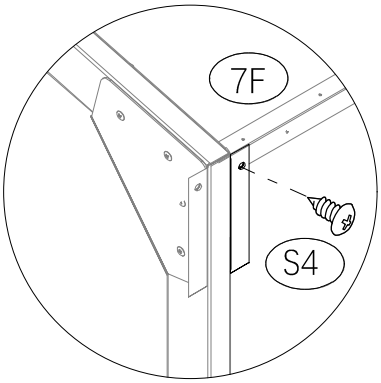


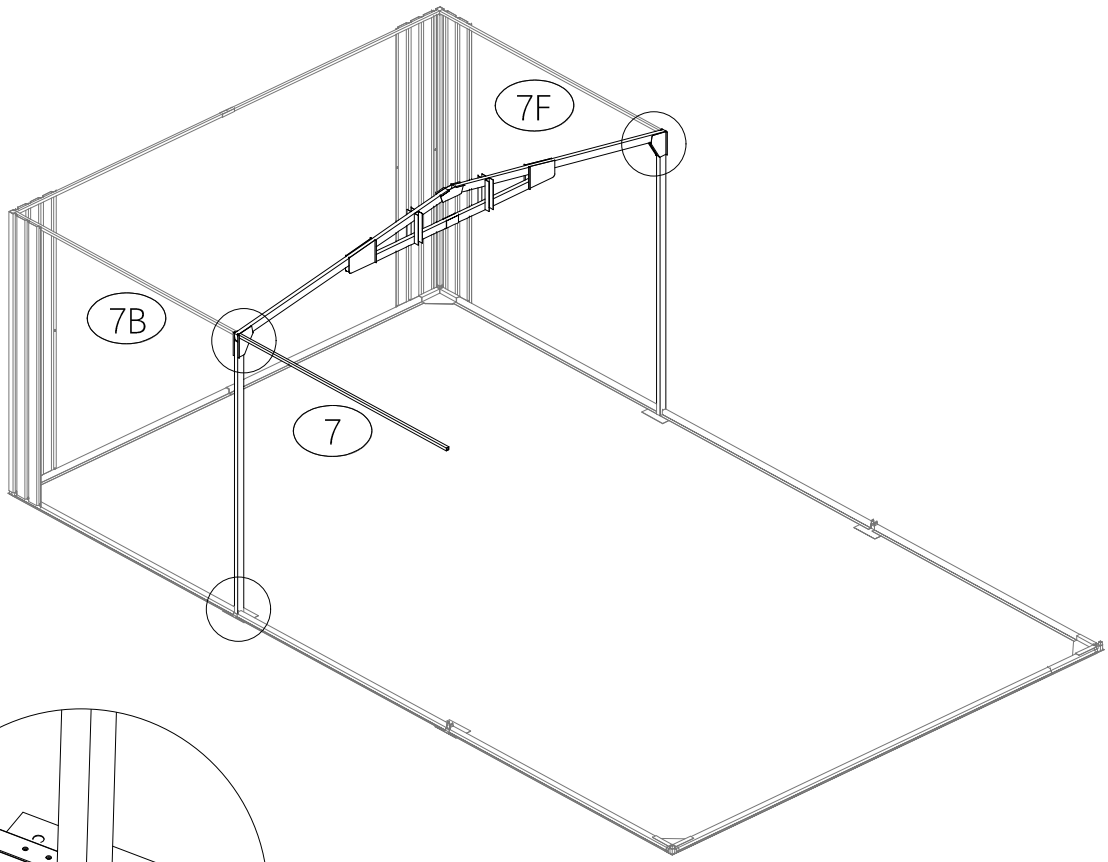


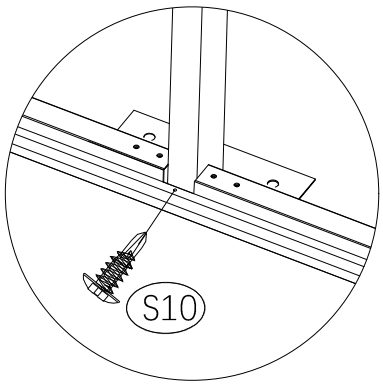
STEP 15

7		1
S4		3
S10		2

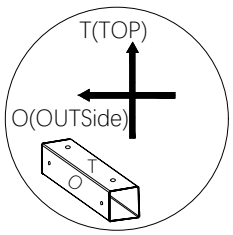






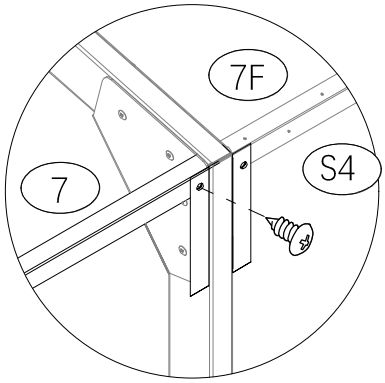


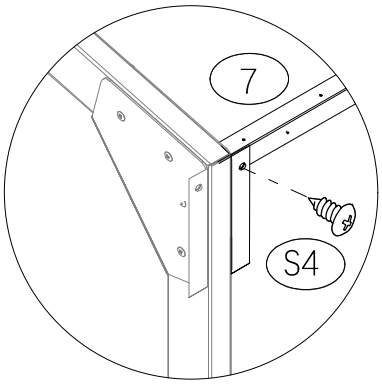
Note: The side with the TOP(T) label should face up,
and the side with the OUTSIDE(O) label should face outward.
During installation, ensure that square tube 7 is flush with the top of the connecting component.

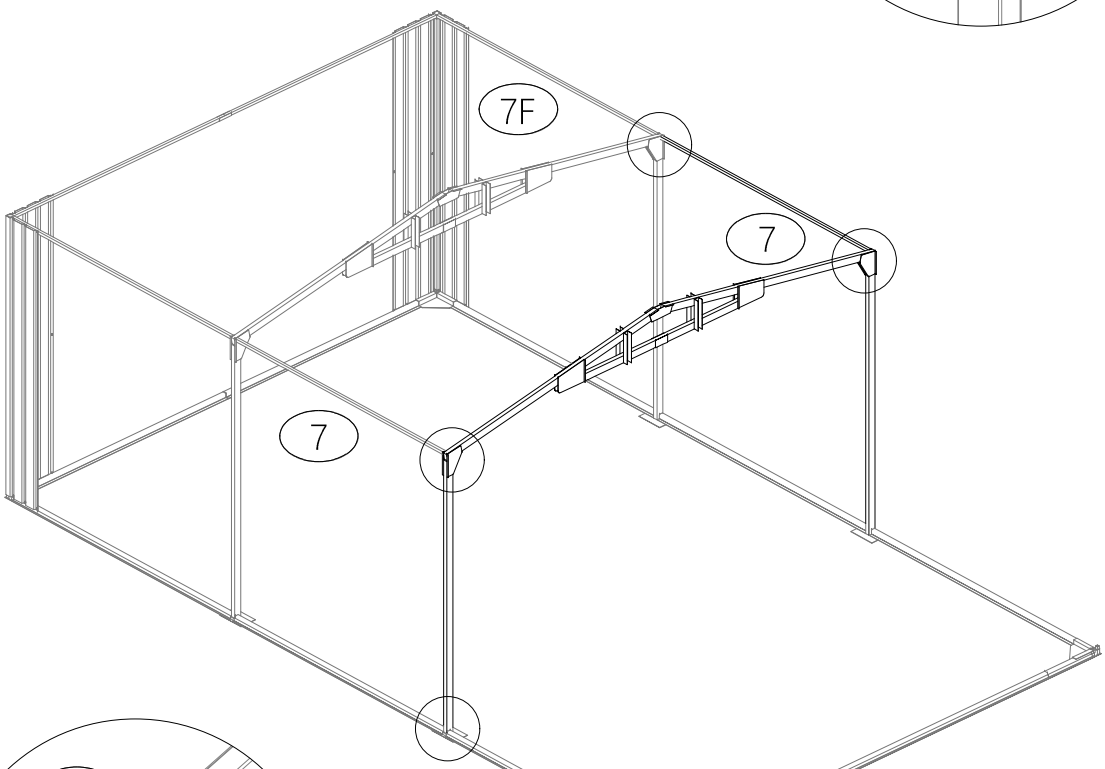


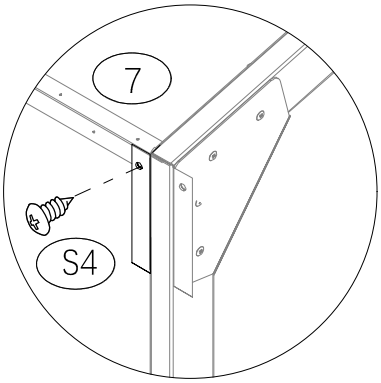
STEP 16

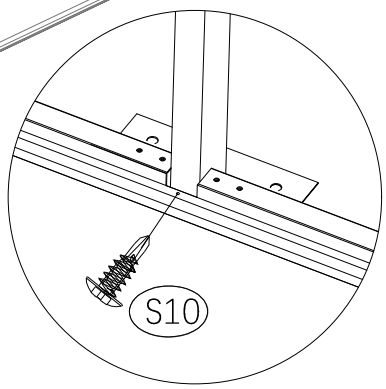
7		1
S4		3
S10		2



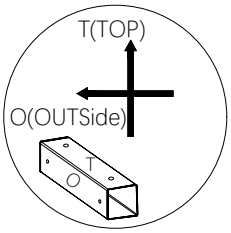






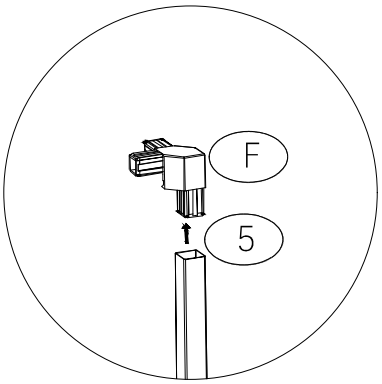


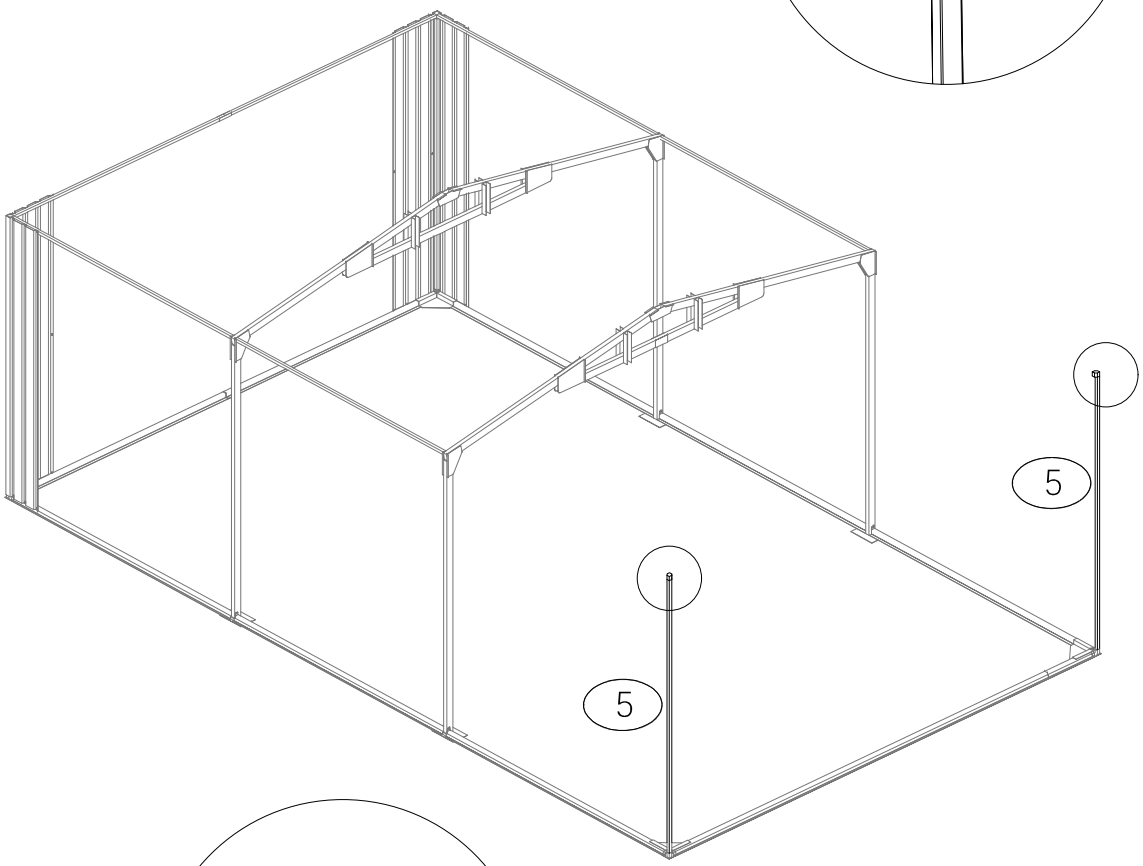
Note: The side with the TOP(T) label should face up,
and the side with the OUTSIDE(O) label should face outward.
During installation, ensure that square tube 7 is flush with the top of the connecting component.

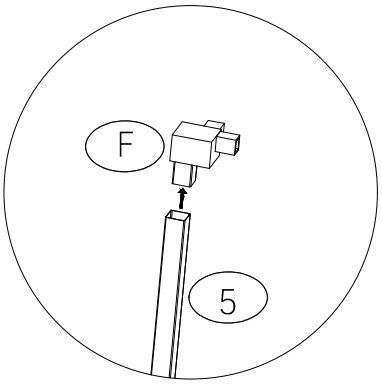


5		2
F		2

STEP 17

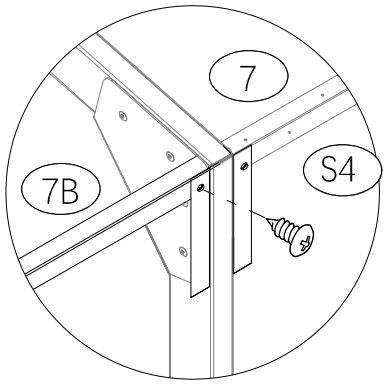


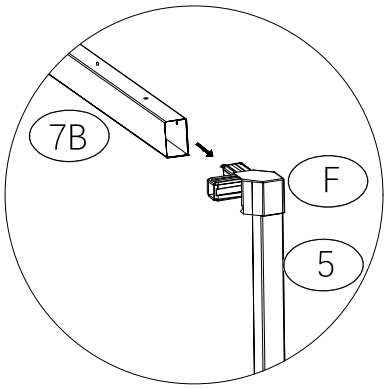


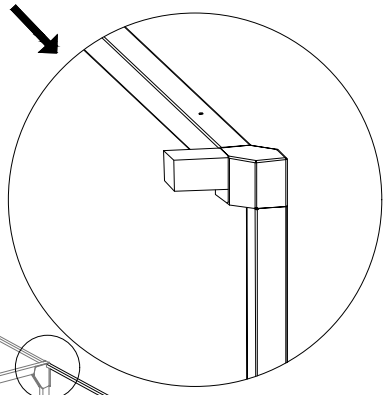


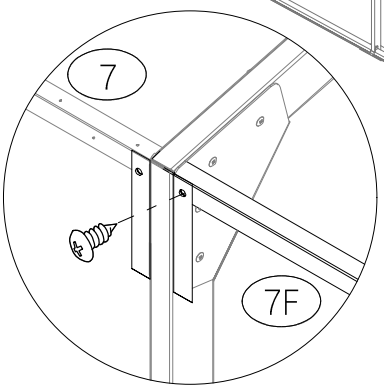
STEP 18

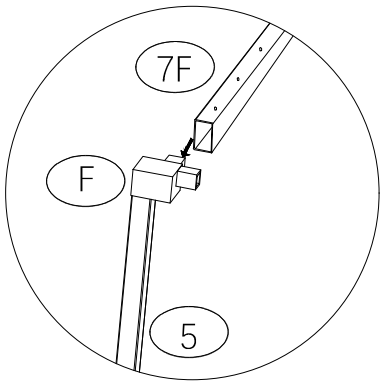
7B		1
7F		1
S4		2

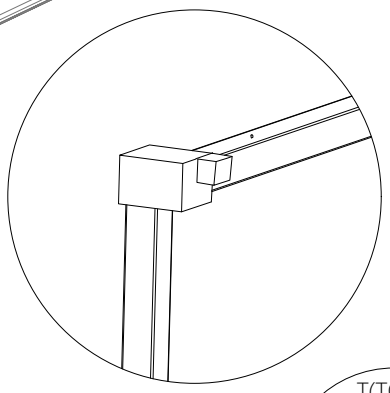




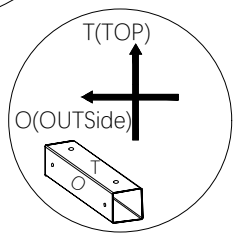






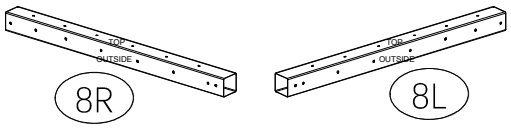


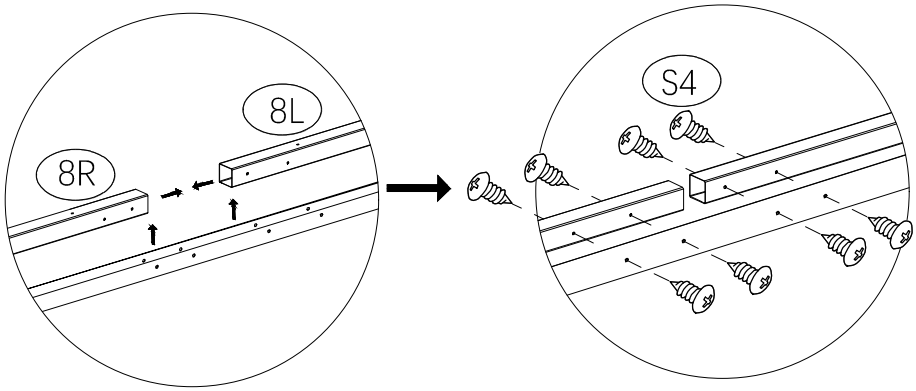
Note: The side with the TOP(T) label should face up,
and the side with the OUTSIDE(O) label should face outward.
During installation, ensure that square tube 7 is flush with the top of the connecting component.

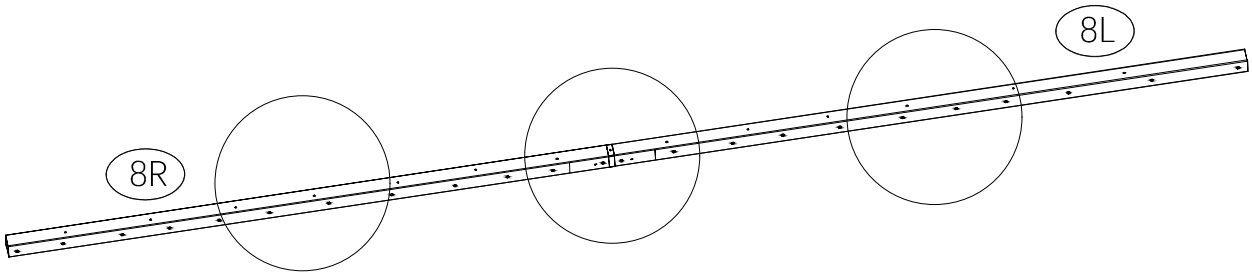


STEP 19

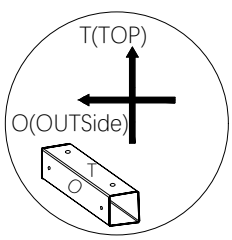
8R		1
8L		1
23		1
S4		8



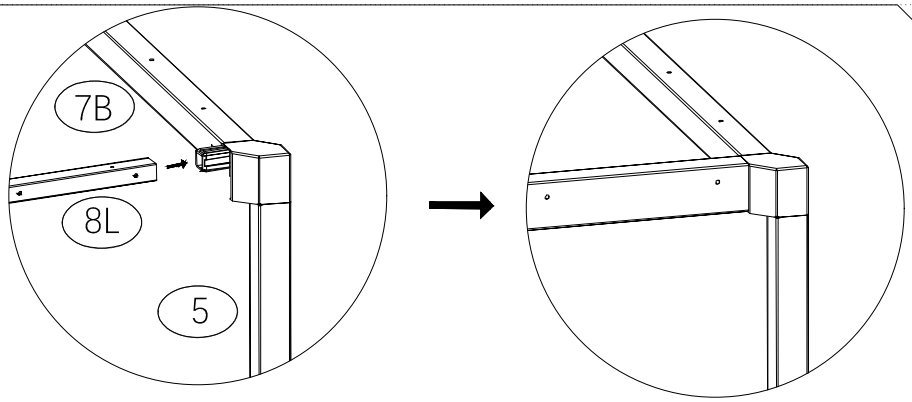


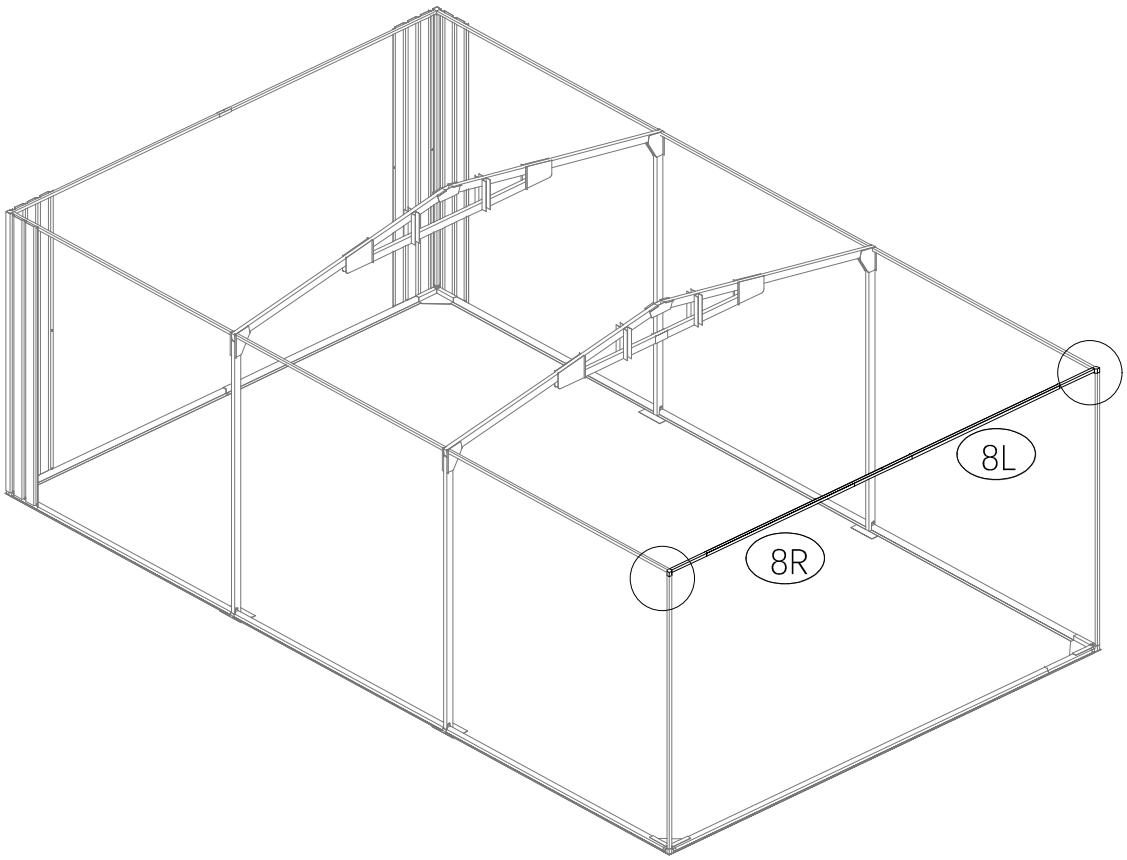


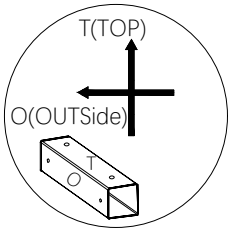
Note: If the label is difficult to recognize or missing, please refer to the hole positions indicated in the instruction manual for installation.
Note: The side with the TOP(T) label should face up, and the side with the OUTSIDE(O) label should face outward.

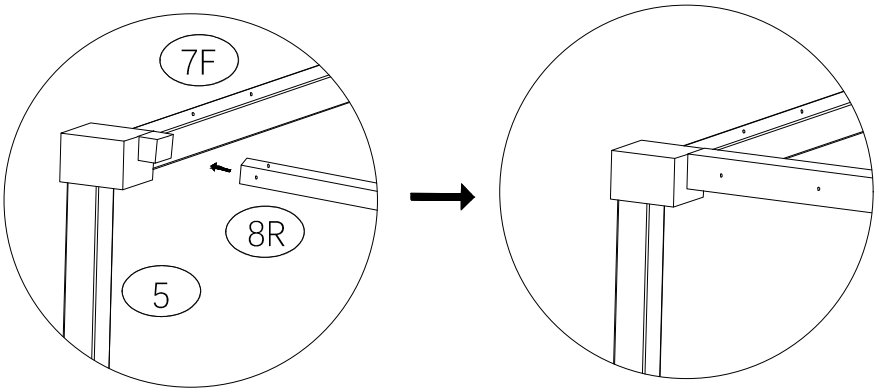


STEP 20





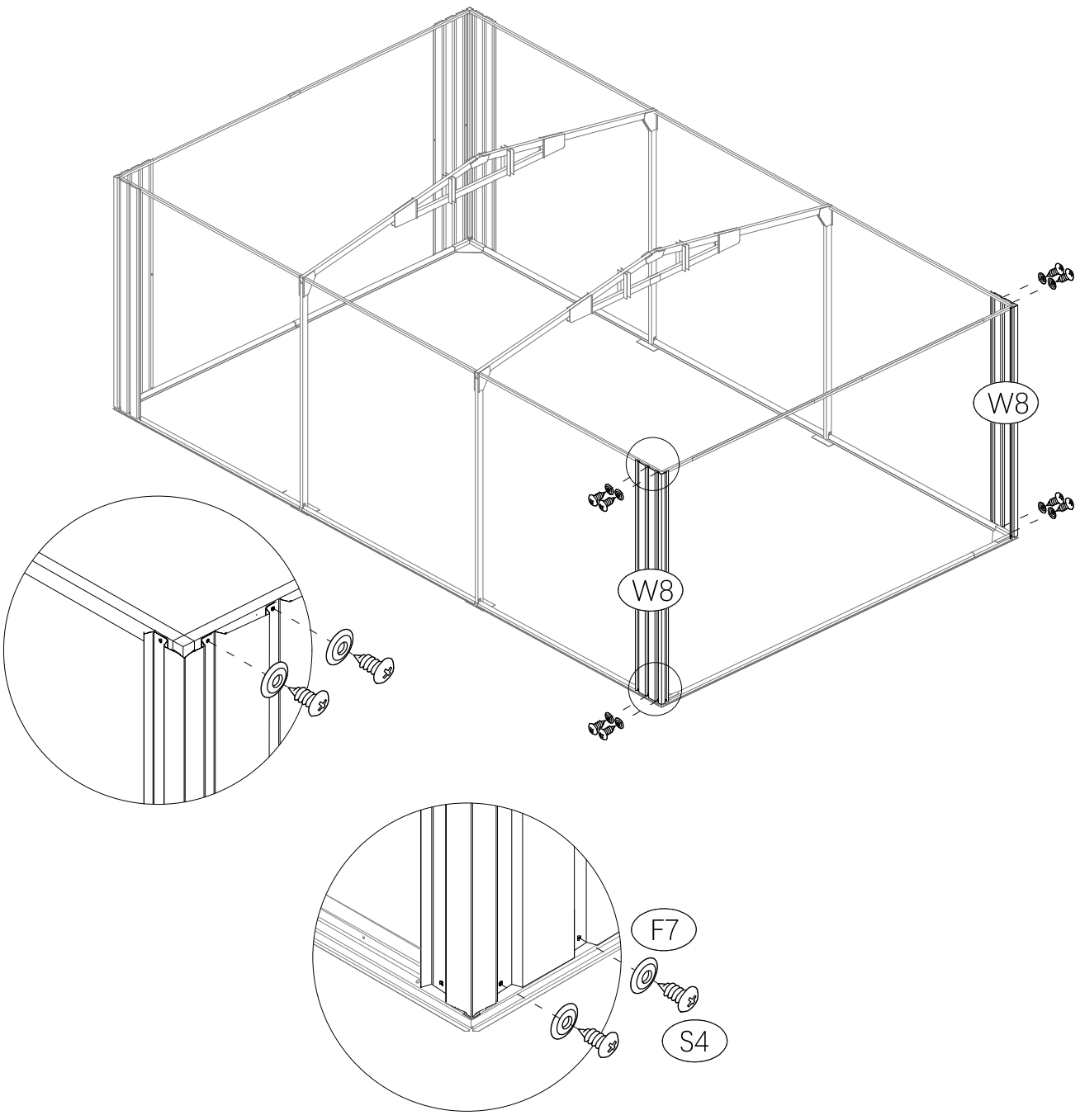


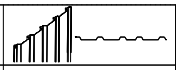


Note: The side with the TOP(T) label should face up,
and the side with the OUTSIDE(O) label should face outward.

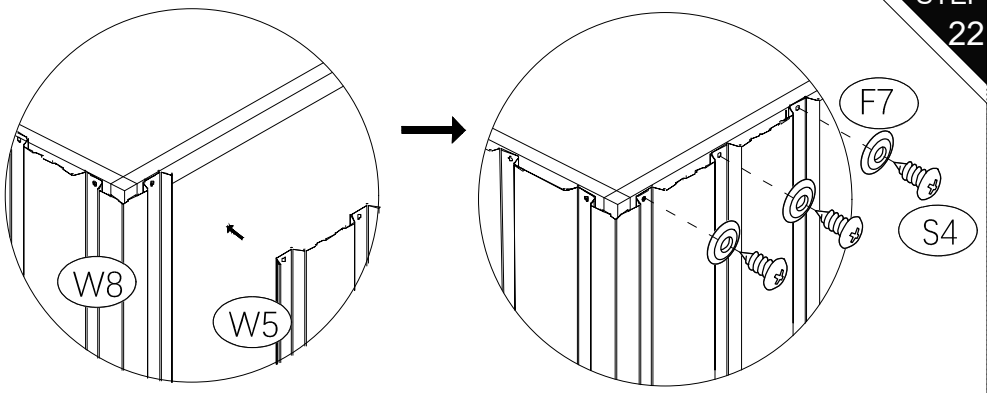
STEP 21

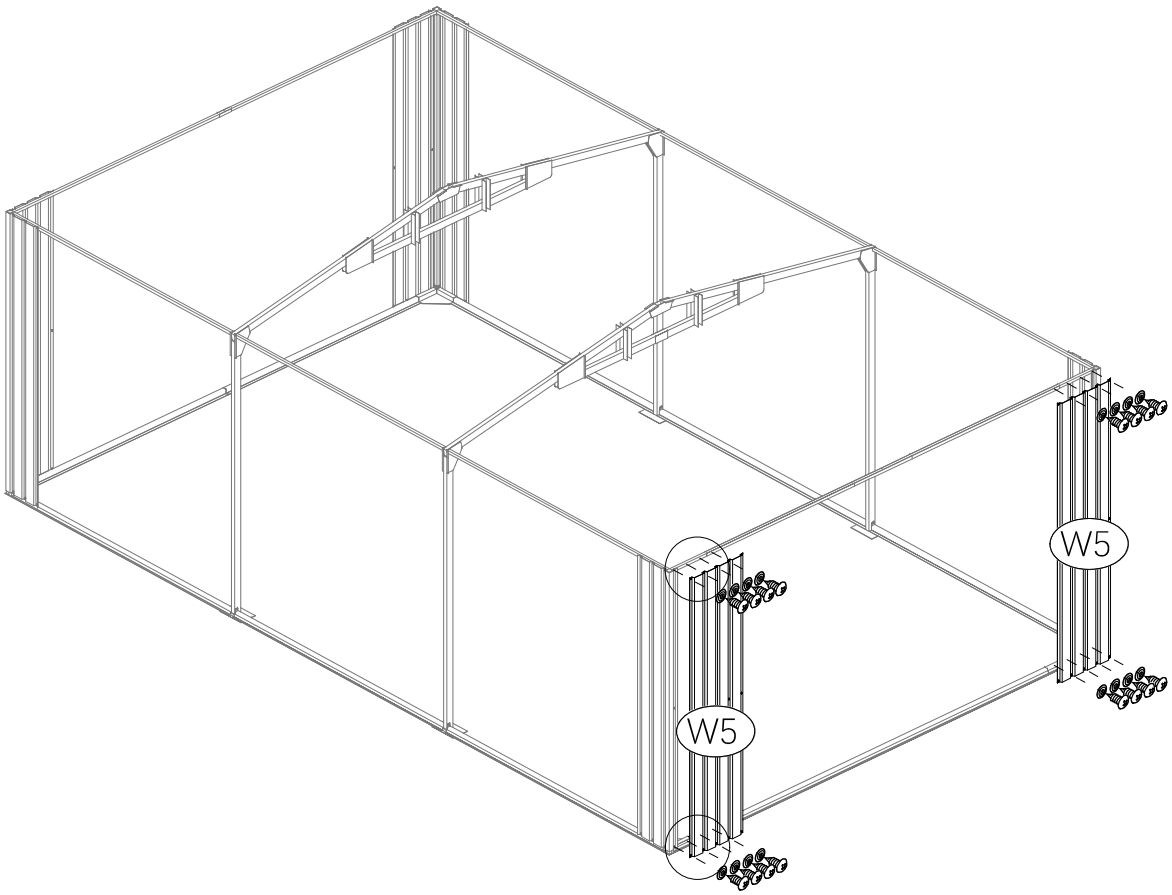
W8		2
S4		8
F7		8

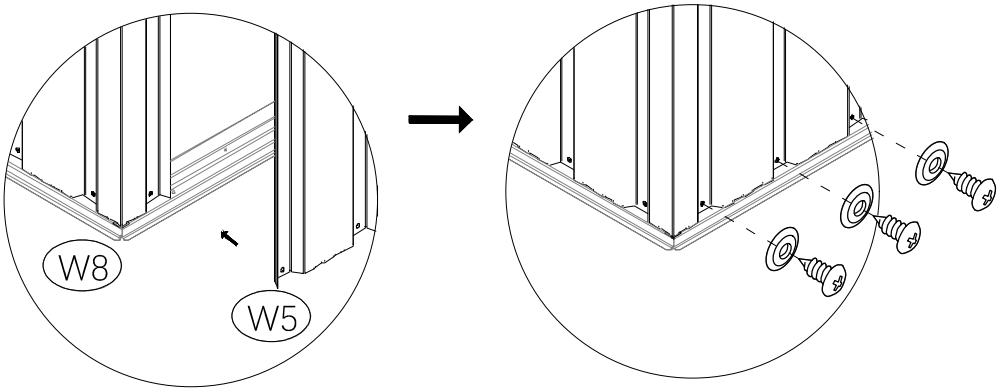


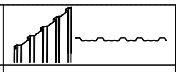
W5		2
S4		16
F7		16

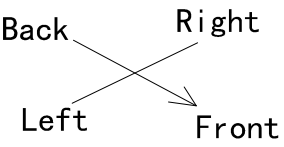
STEP 22

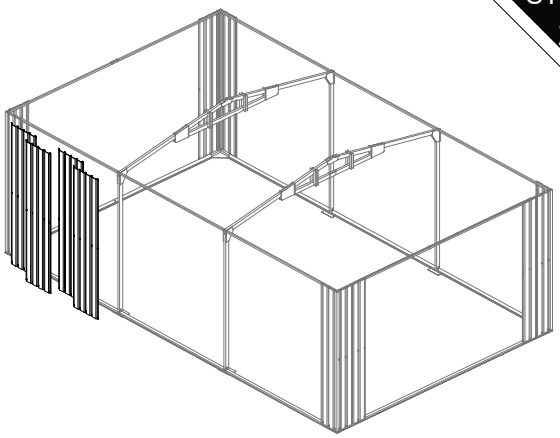


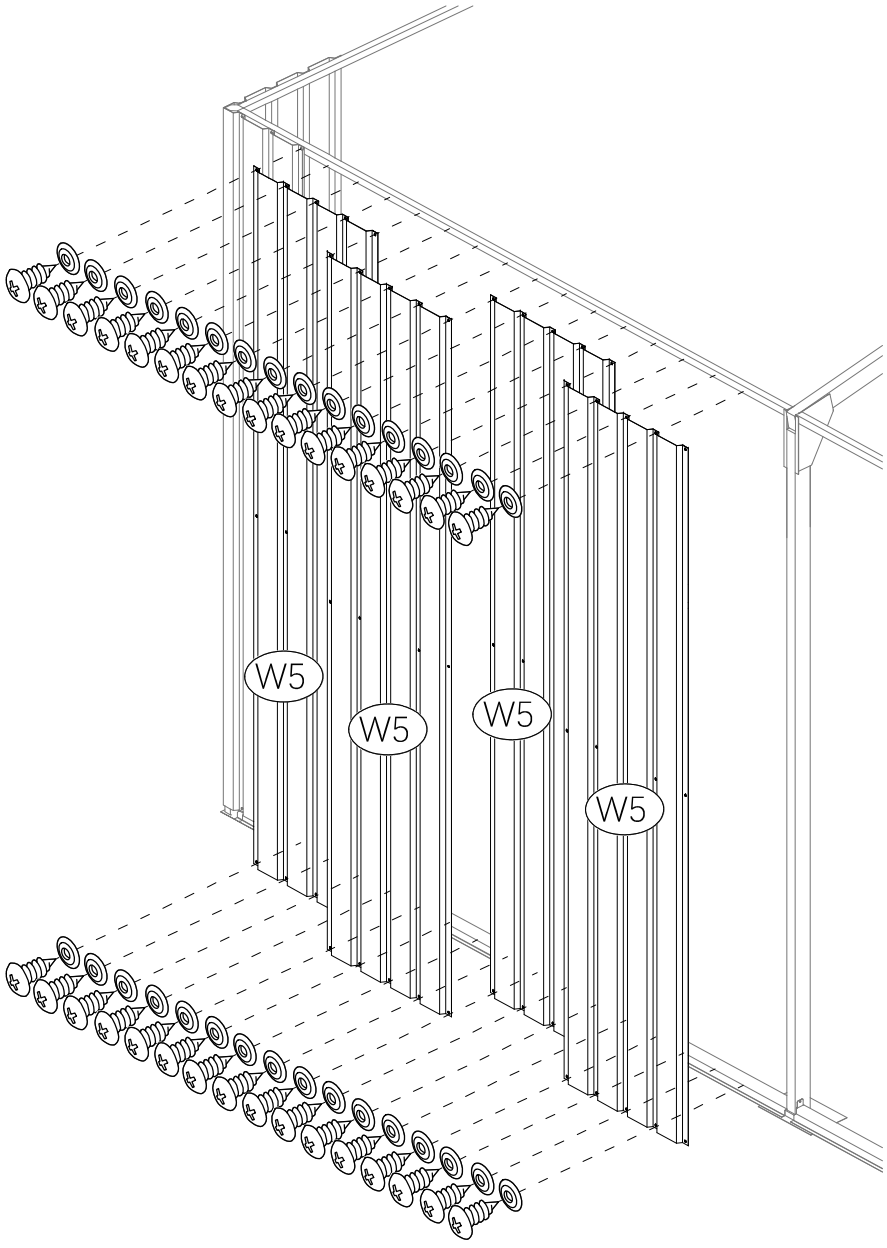




W5		4
S4		32
F7		32

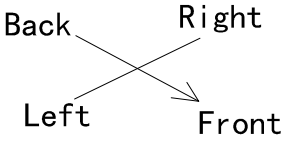




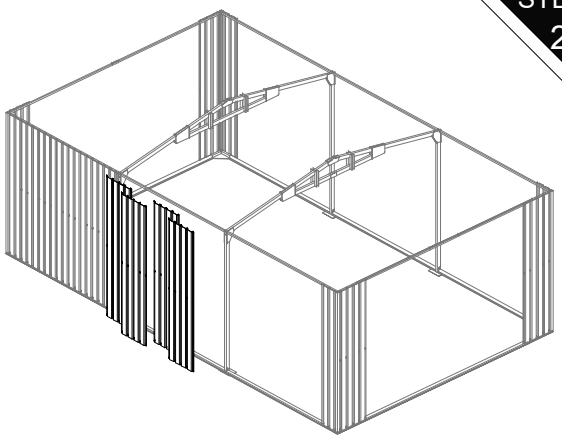


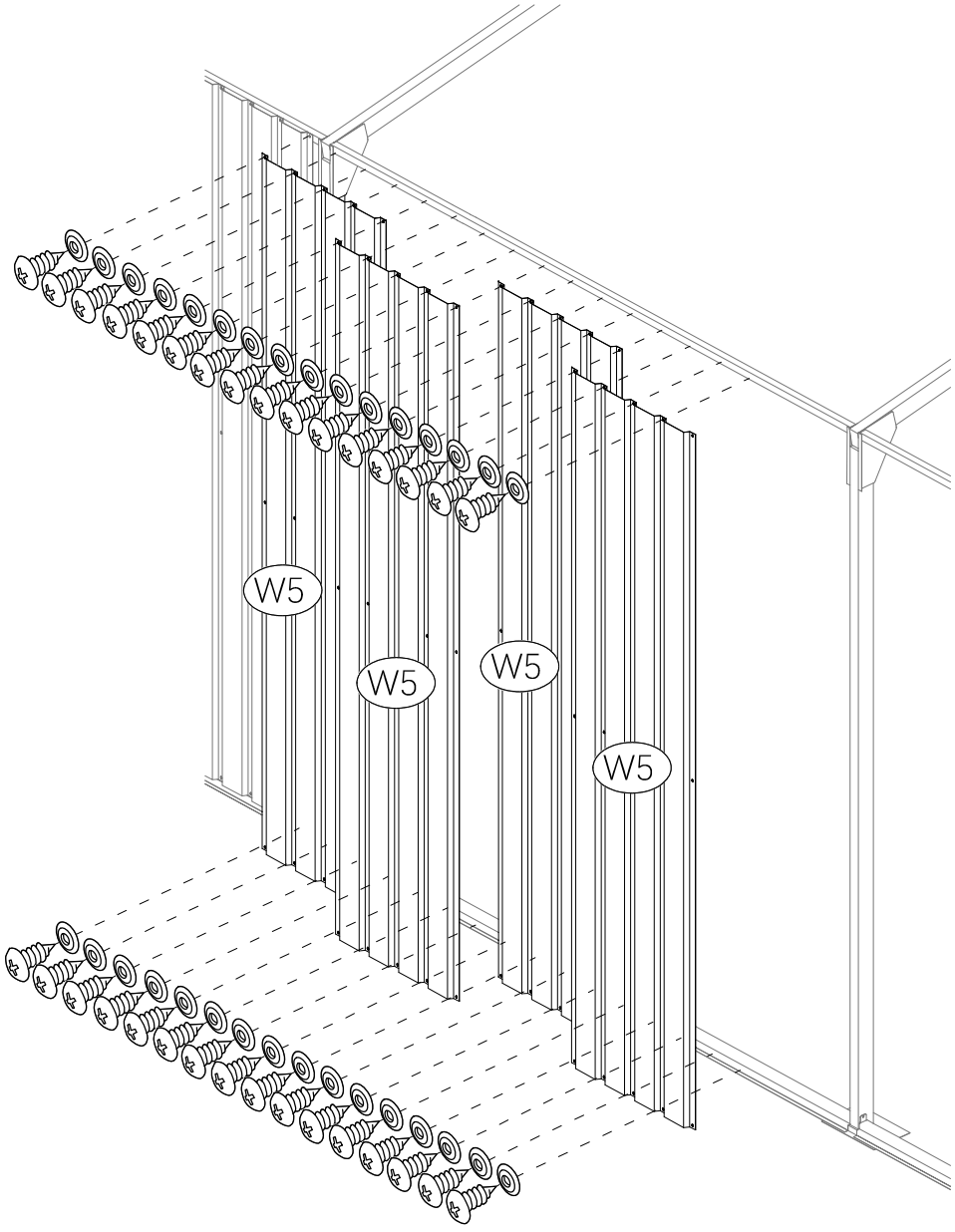
Note: When assembling difficult parts with screws S4,
use screws S10 as alternatives

W5		4
S4		32
F7		32



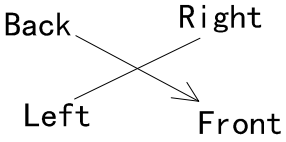
STEP 24

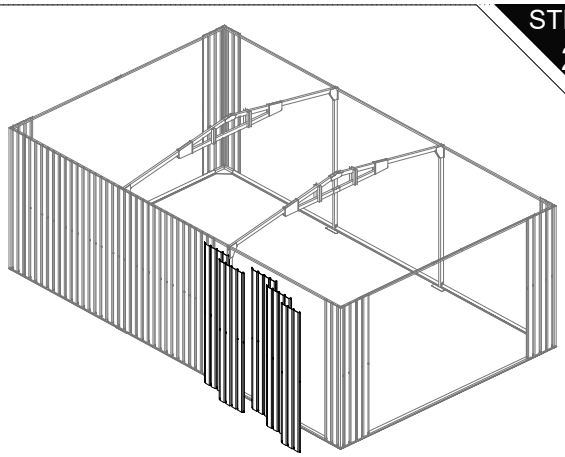


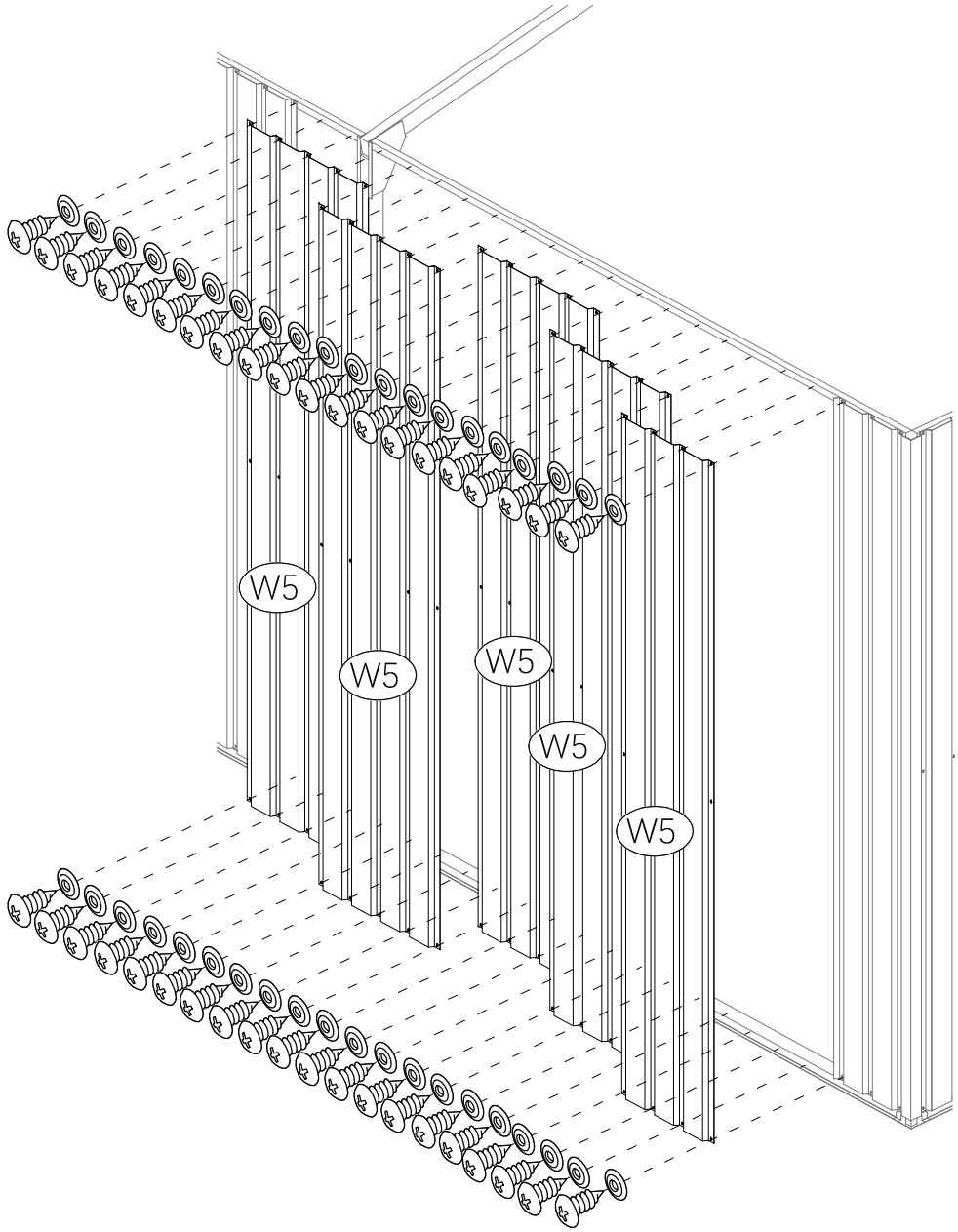


Note: When assembling difficult parts with screws S4, use screws S10 as alternatives

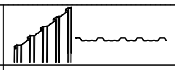
W5		5
S4		40
F7		40

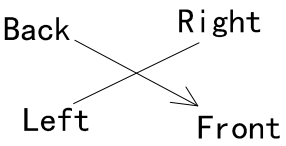




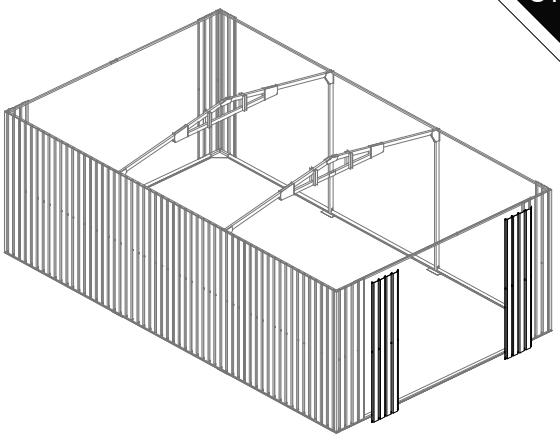


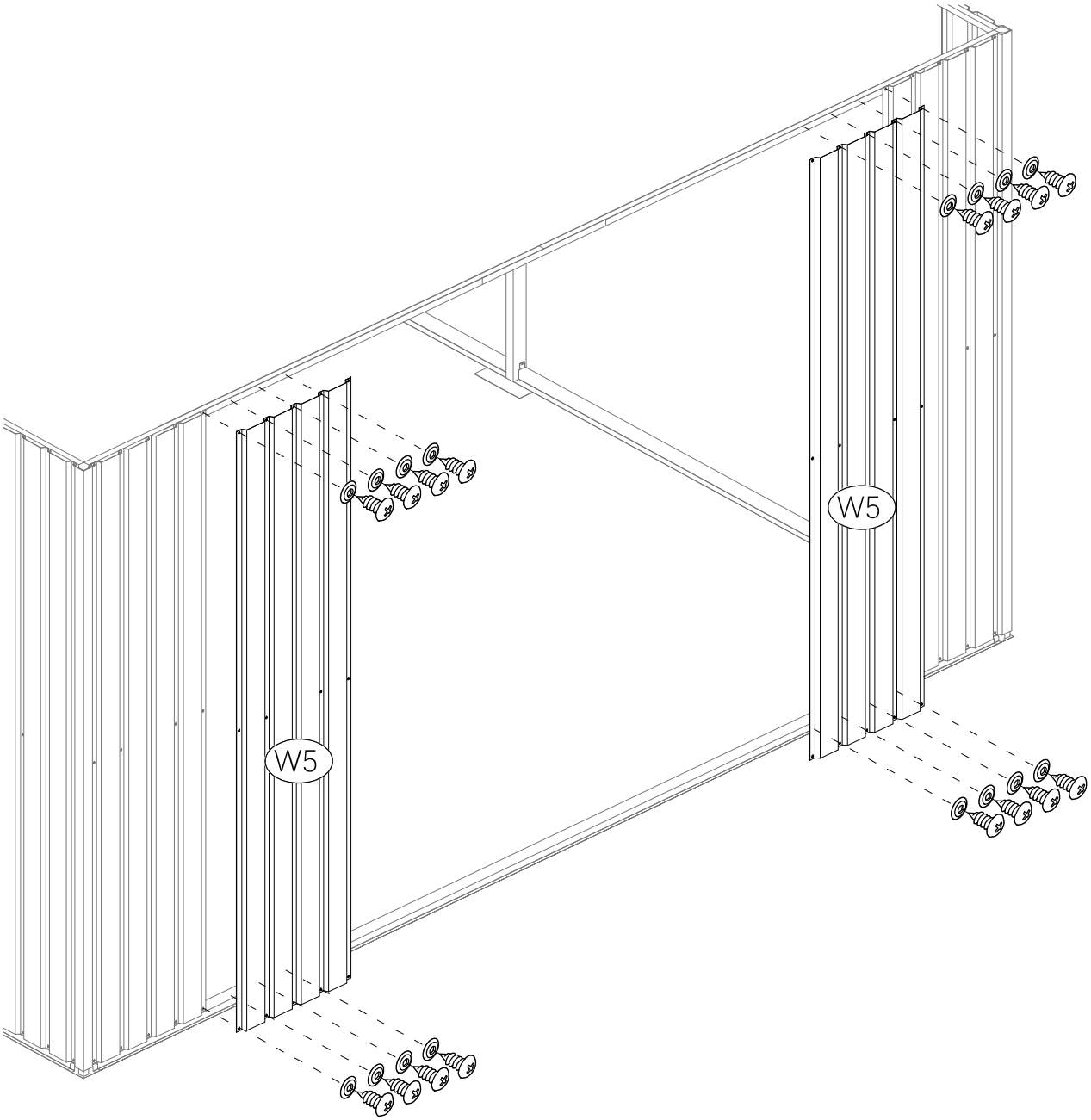
Note: When assembling difficult parts with screws S4, use screws S10 as alternatives

W5		2
S4		16
F7		16



STEP 26

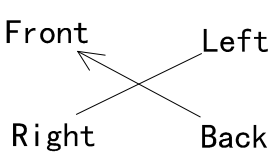


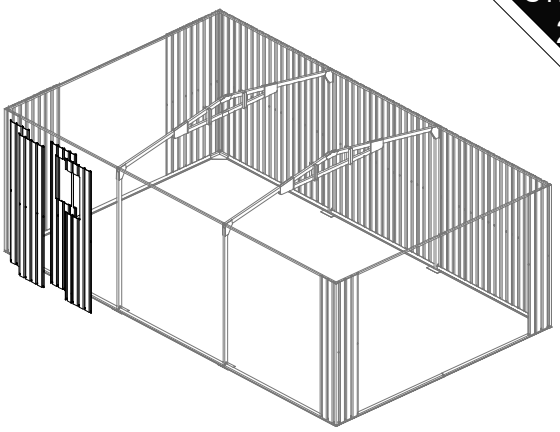


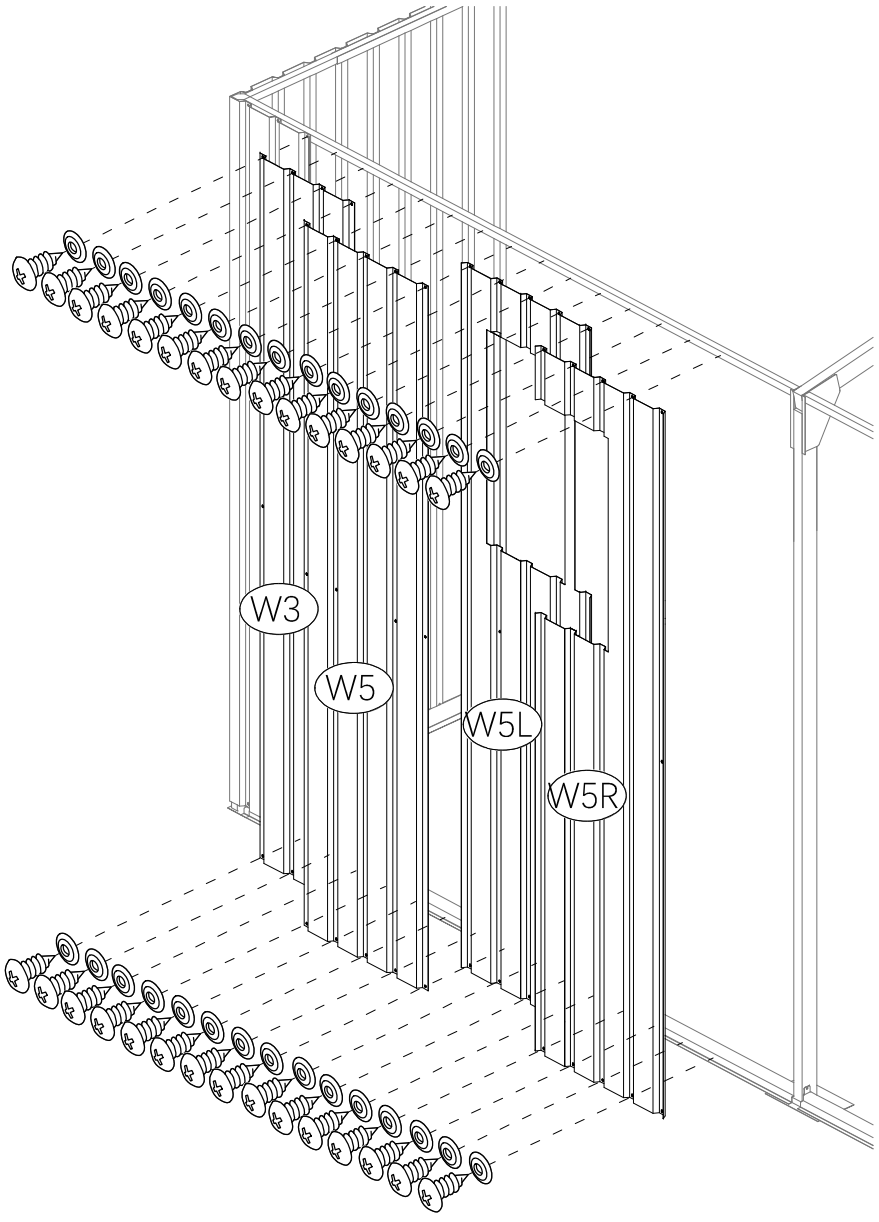
Note: When assembling difficult parts with screws S4, use screws S10 as alternatives

STEP 27

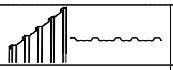
W3		1
W5L		1
W5R		1
W5		1
S4		30
F7		30

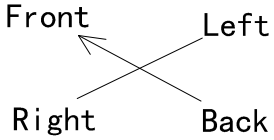


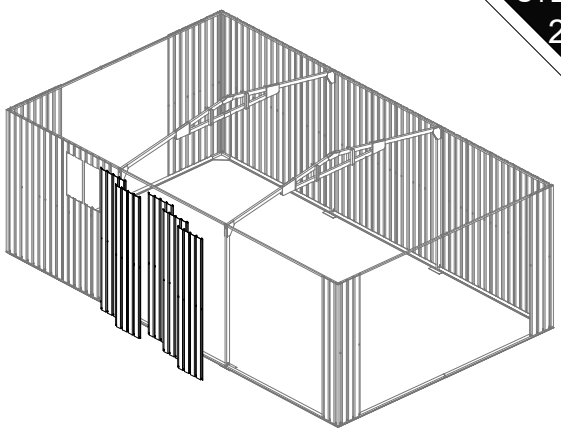


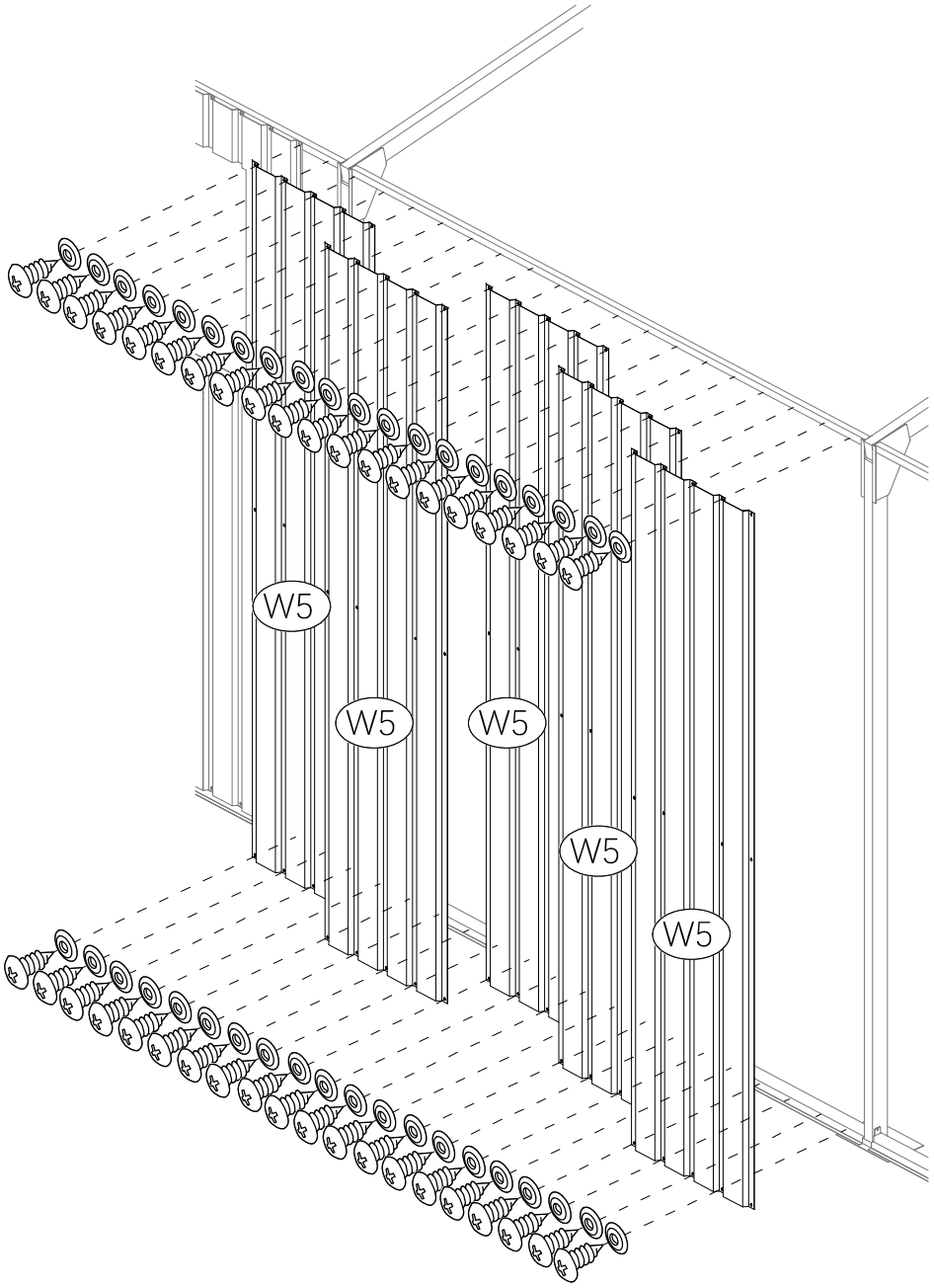


Note: When assembling difficult parts with screws S4, use screws S10 as alternatives

W5		5
S4		40
F7		40

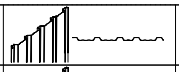


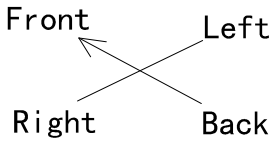


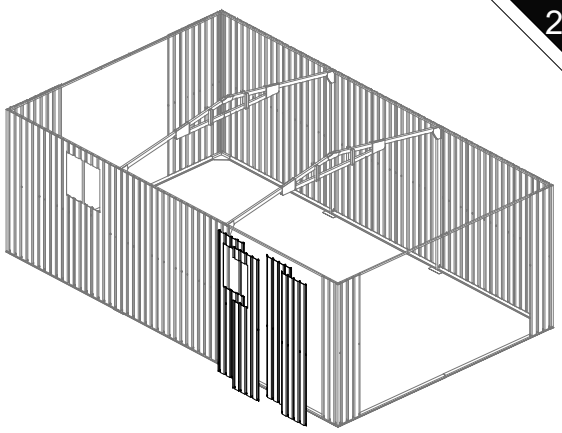


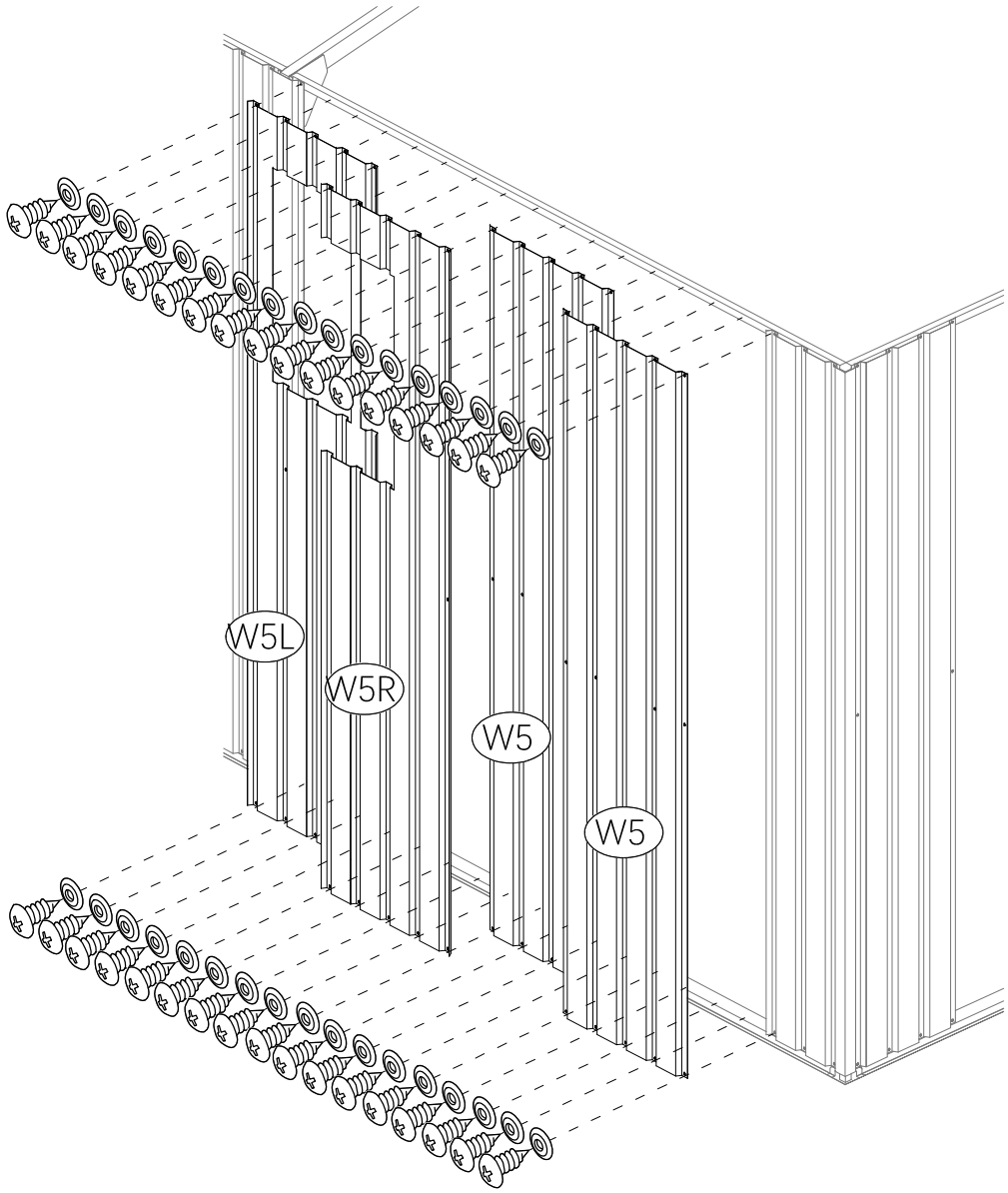
Note: When assembling difficult parts with screws S4, use screws S10 as alternatives

STEP 29

W5L		1
W5R		1
W5		2
S4		34
F7		34

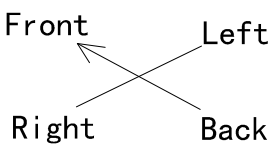




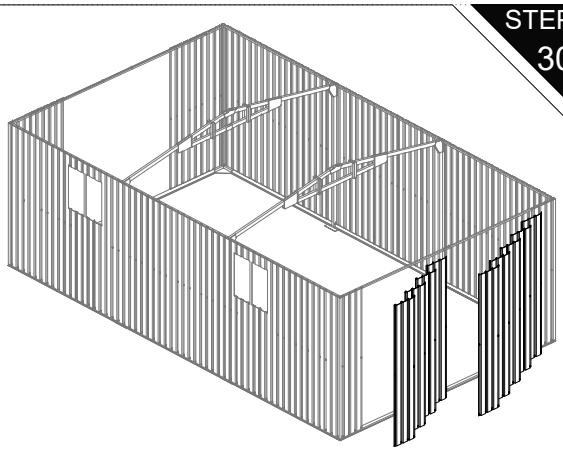


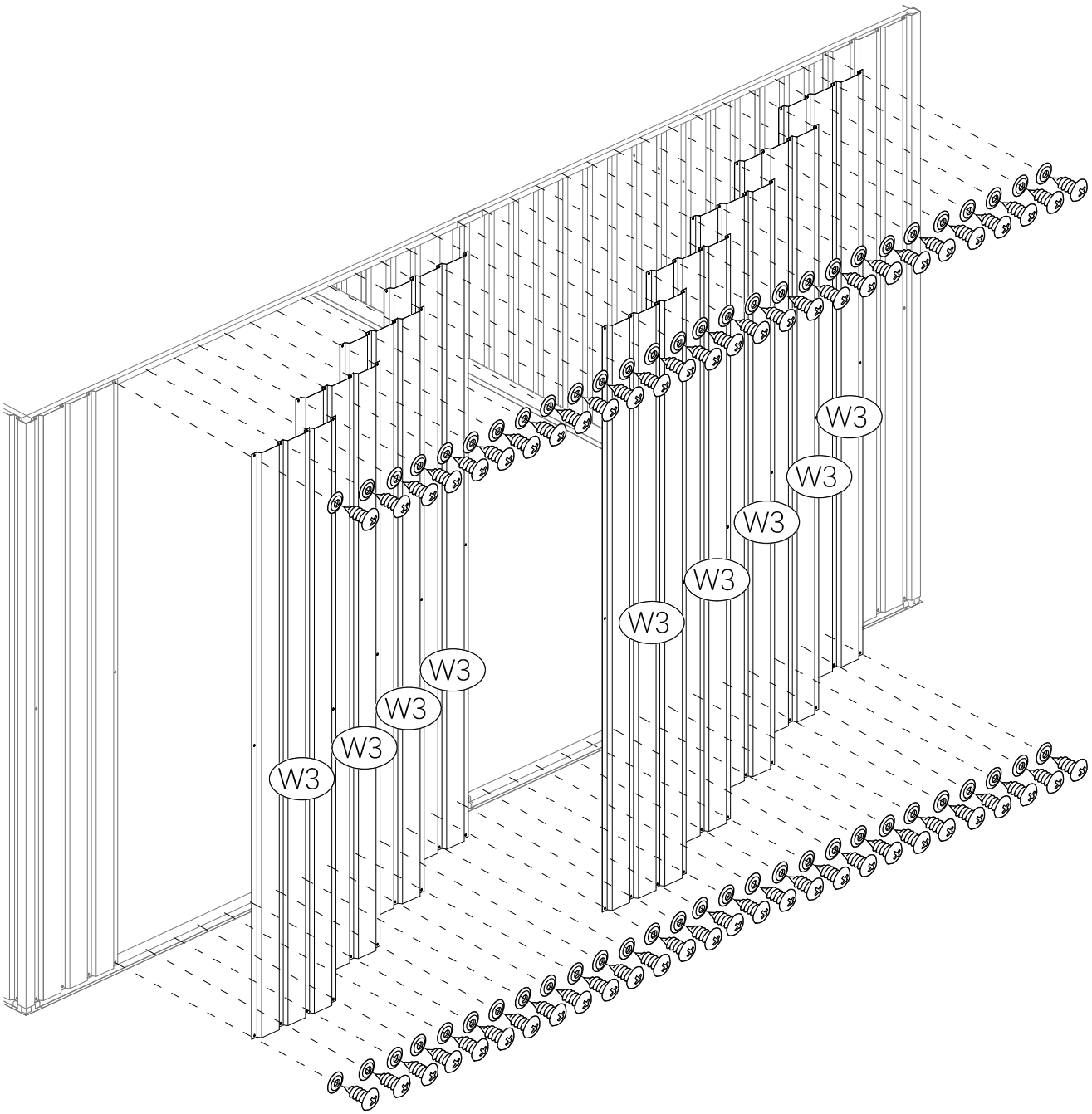
Note: When assembling difficult parts with screws S4, use screws S10 as alternatives

W3		9
S4		56
F7		56



STEP 30

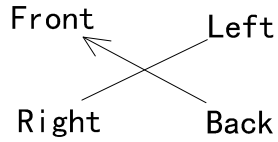


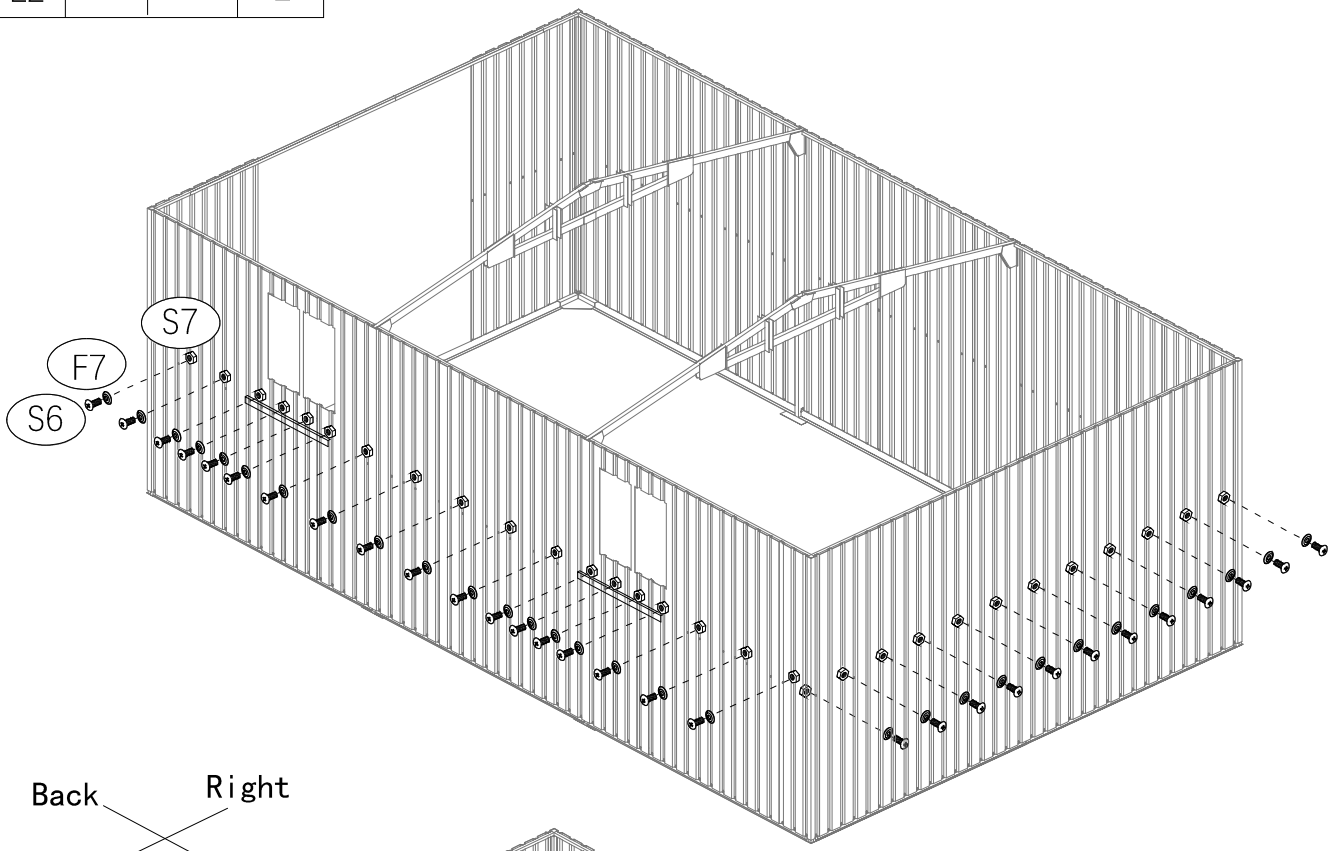


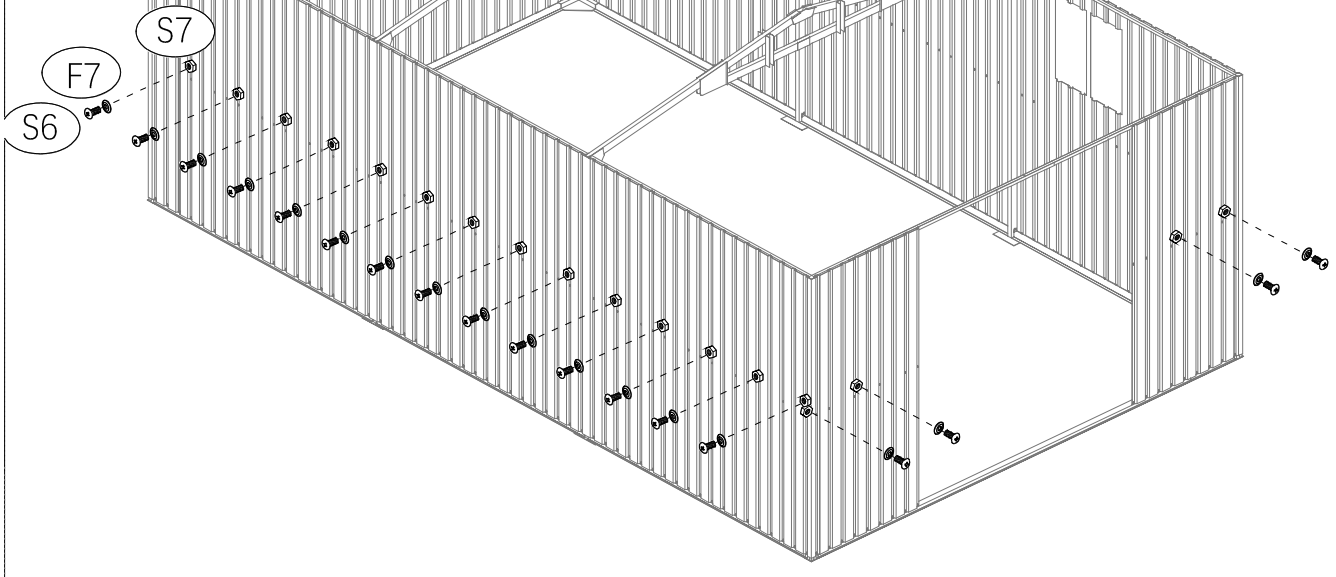
Note: When assembling difficult parts with screws S4, use screws S10 as alternatives

STEP 31

F7		48
S6		48
S7		48
YE2		2

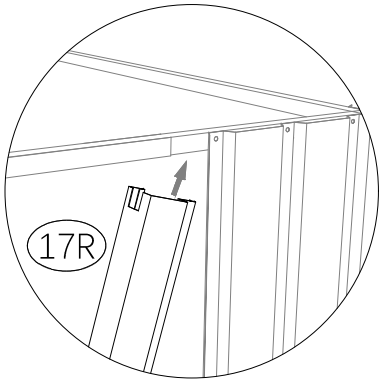


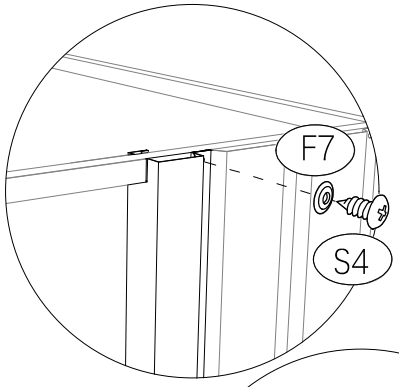


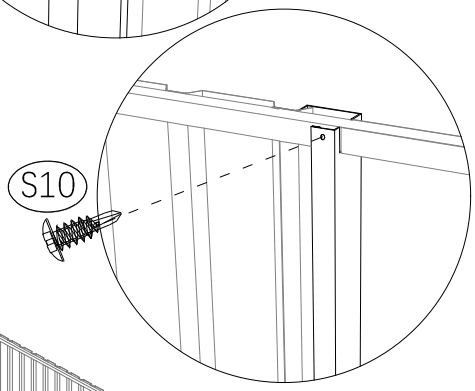


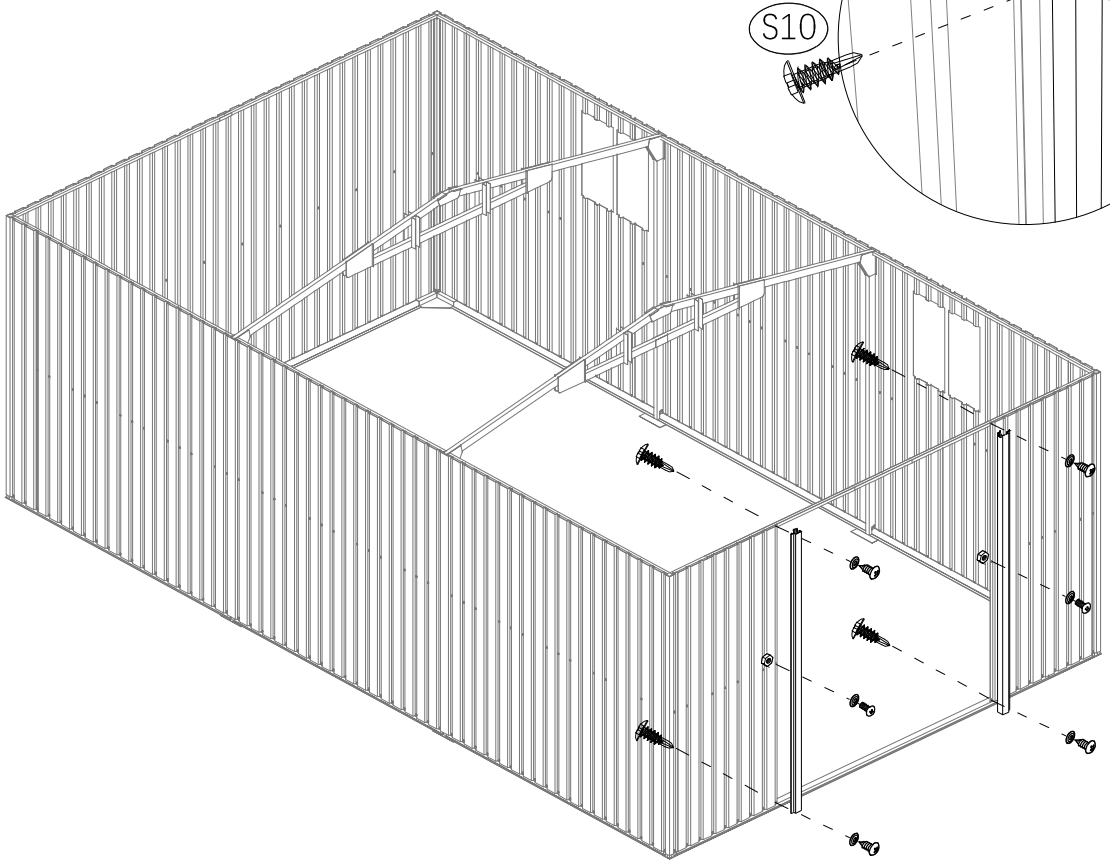
STEP 32

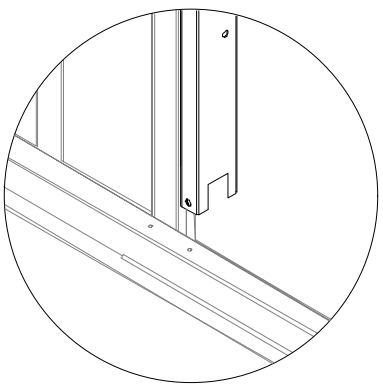
17L		1
17R		1
S4		4
F7		6
S6		2
S7		2
S10		4

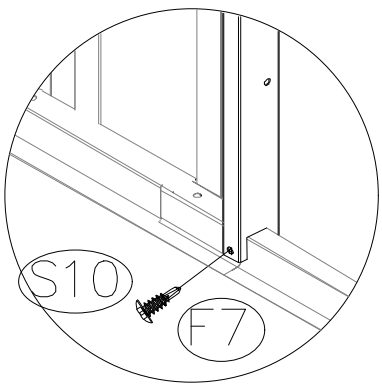






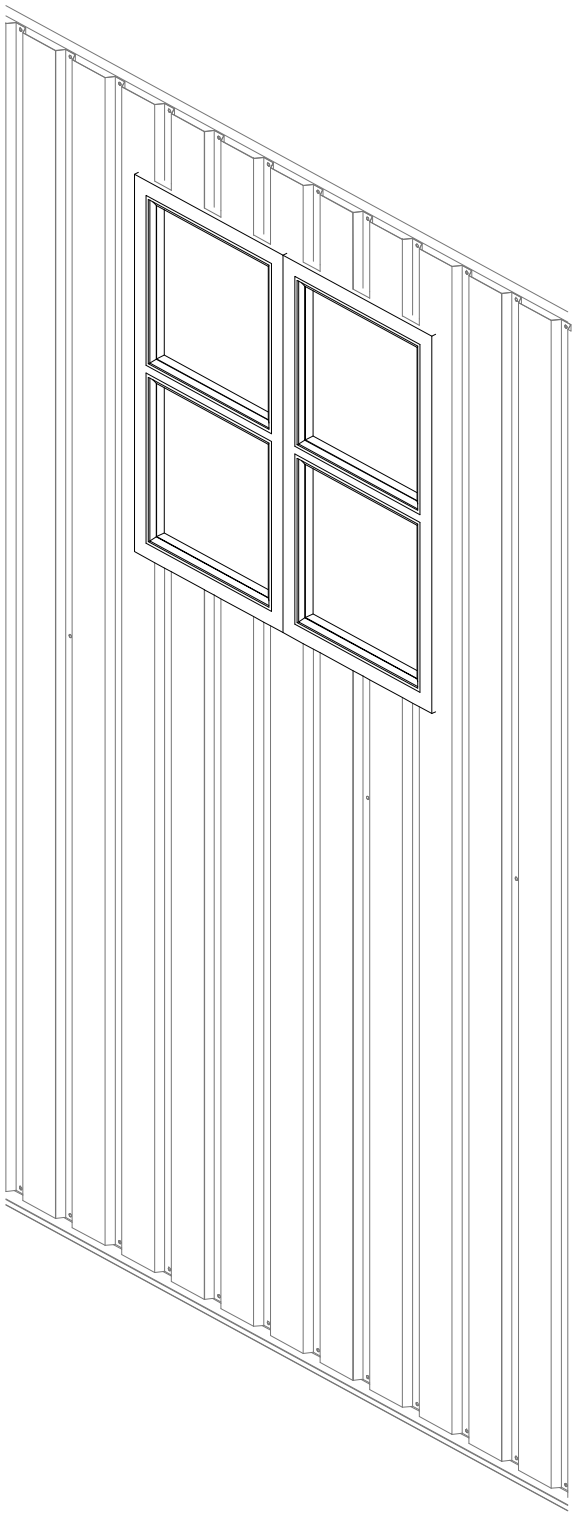






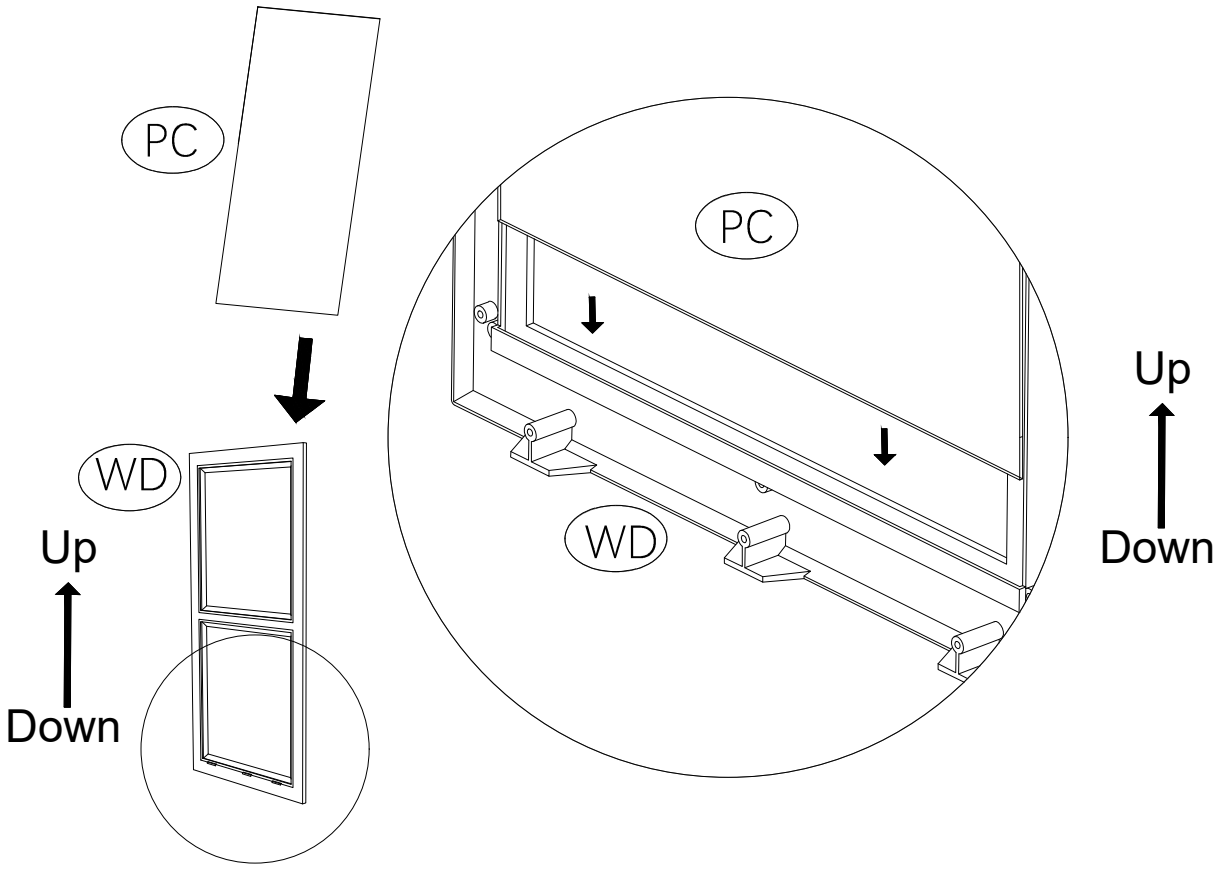
Part 3 :

Window Installation



WD		4
PC		4

STEP 33

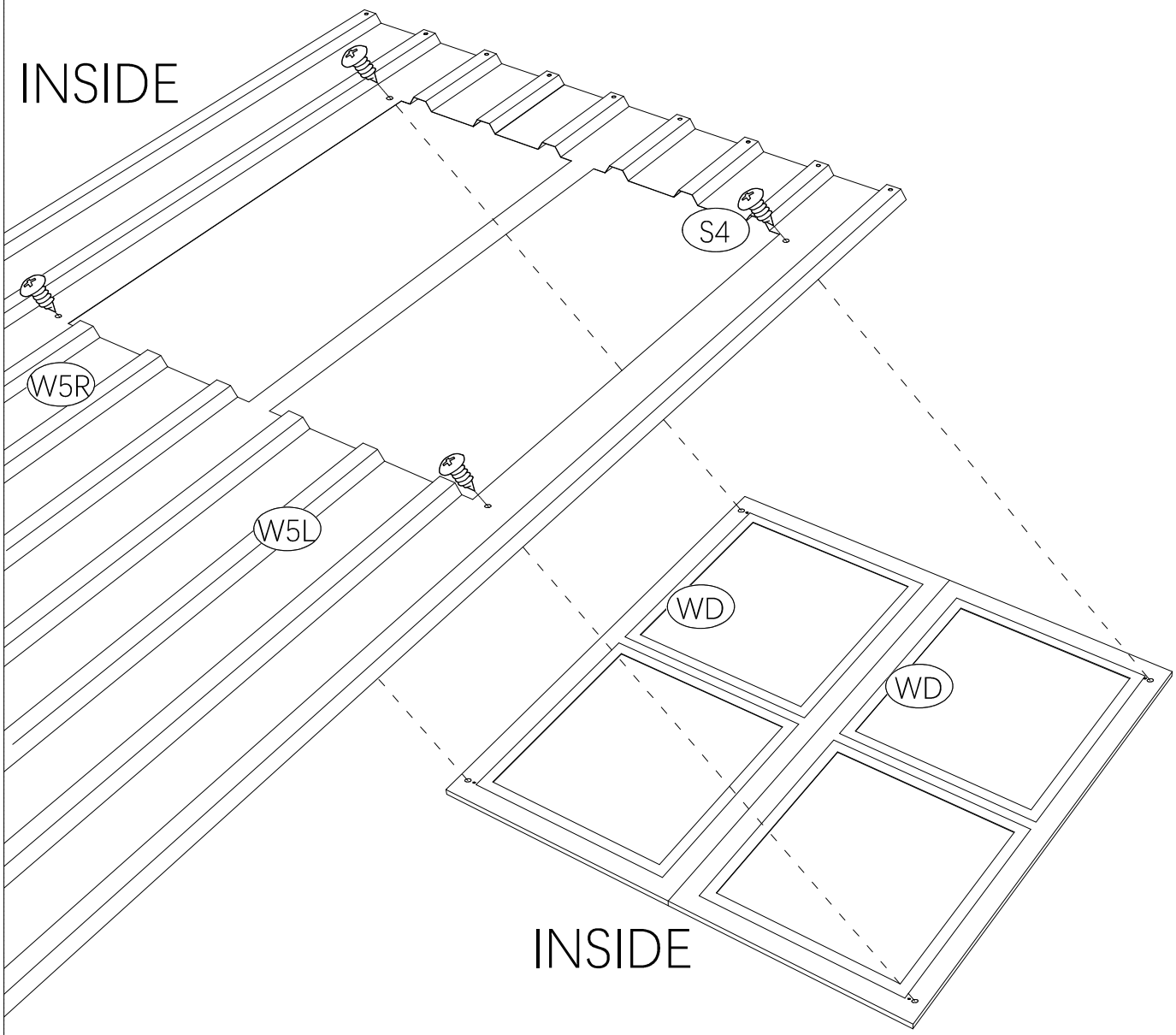


The milky white film faces outward and the films on both sides are torn off

X8

S4		8

STEP 34

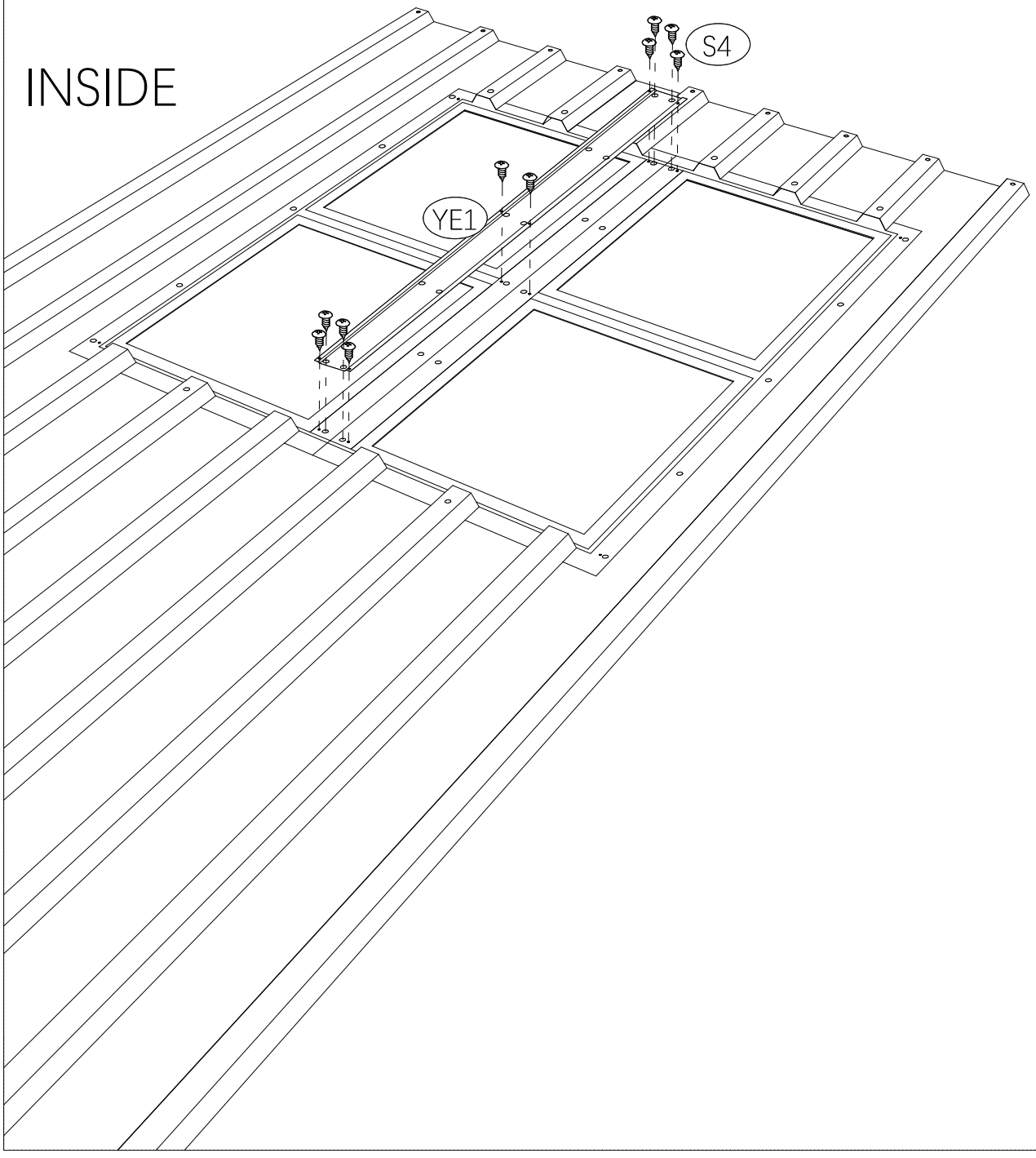


X2

YE1		2
S4		20

STEP 35

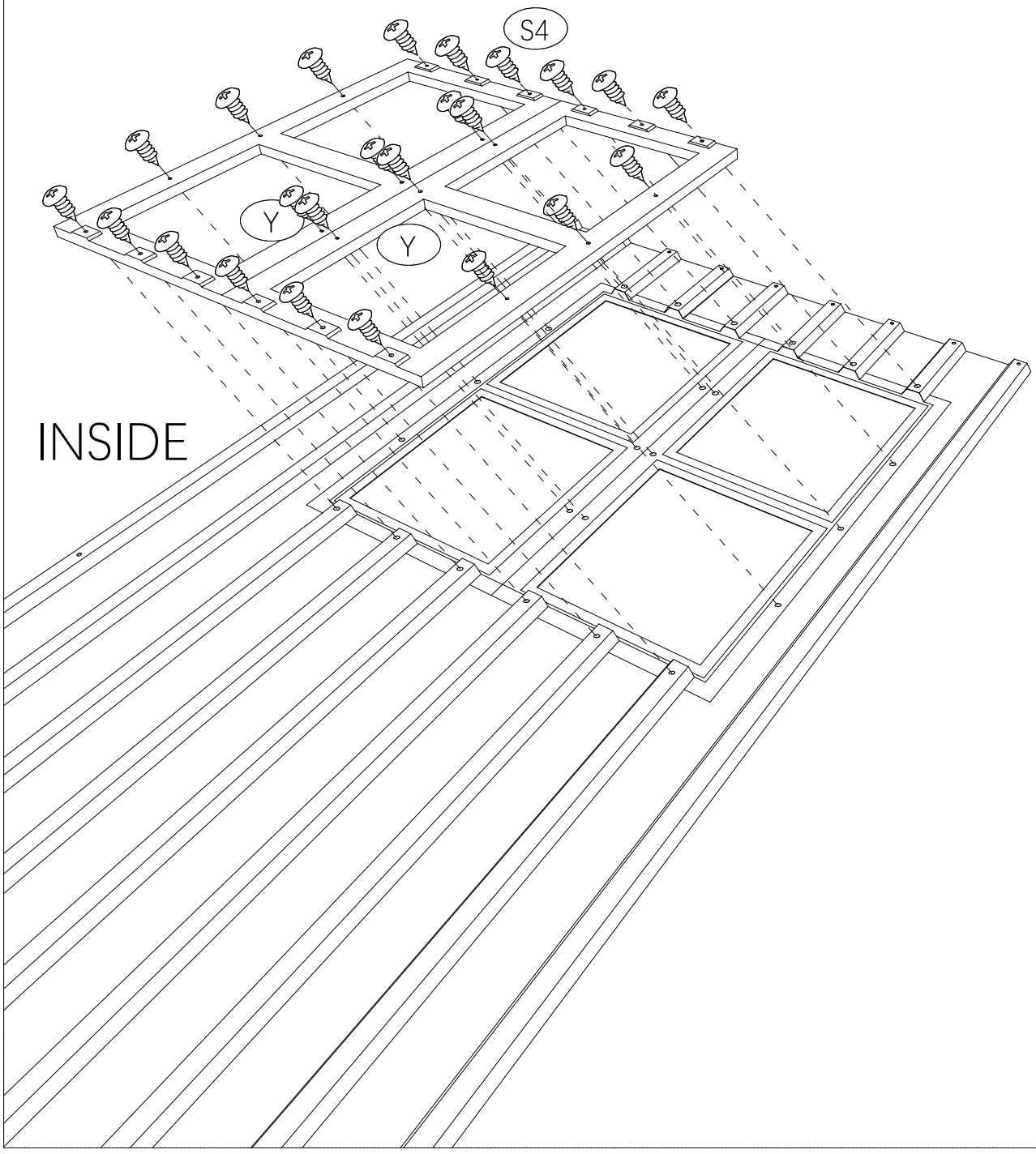
INSIDE



X2

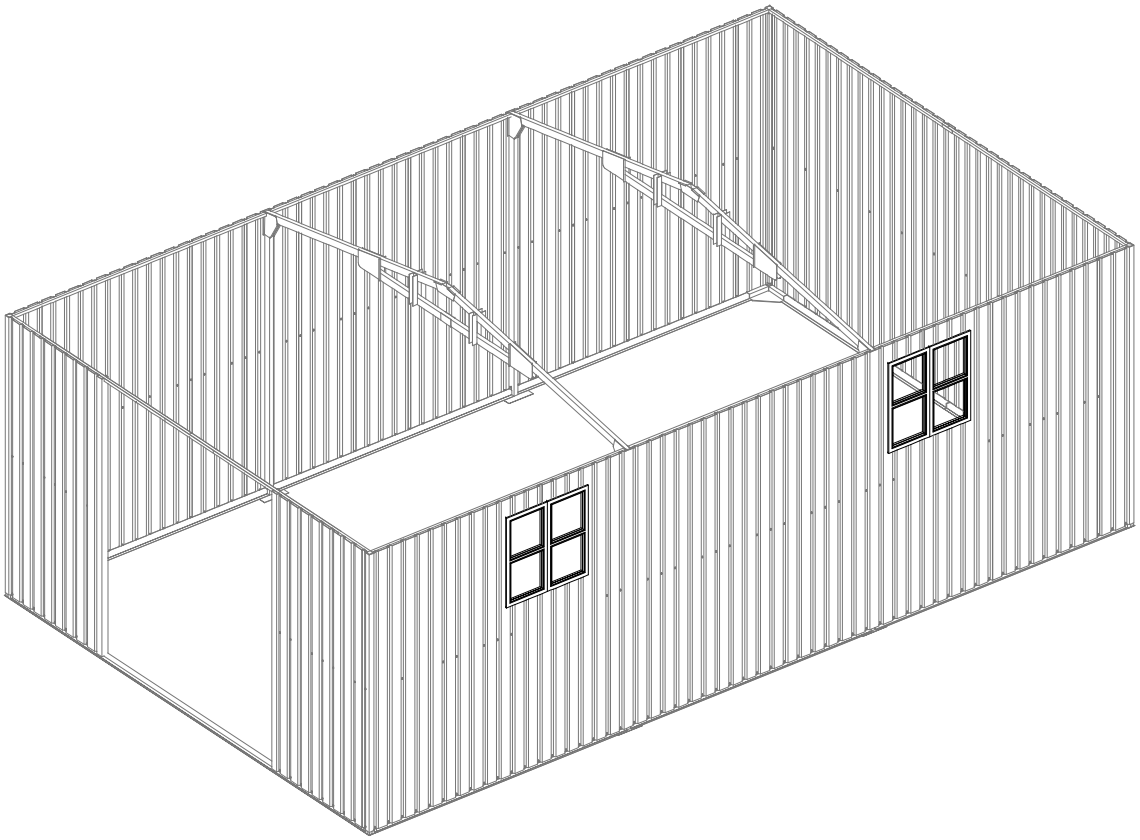
Y		4
S4		48

STEP 36



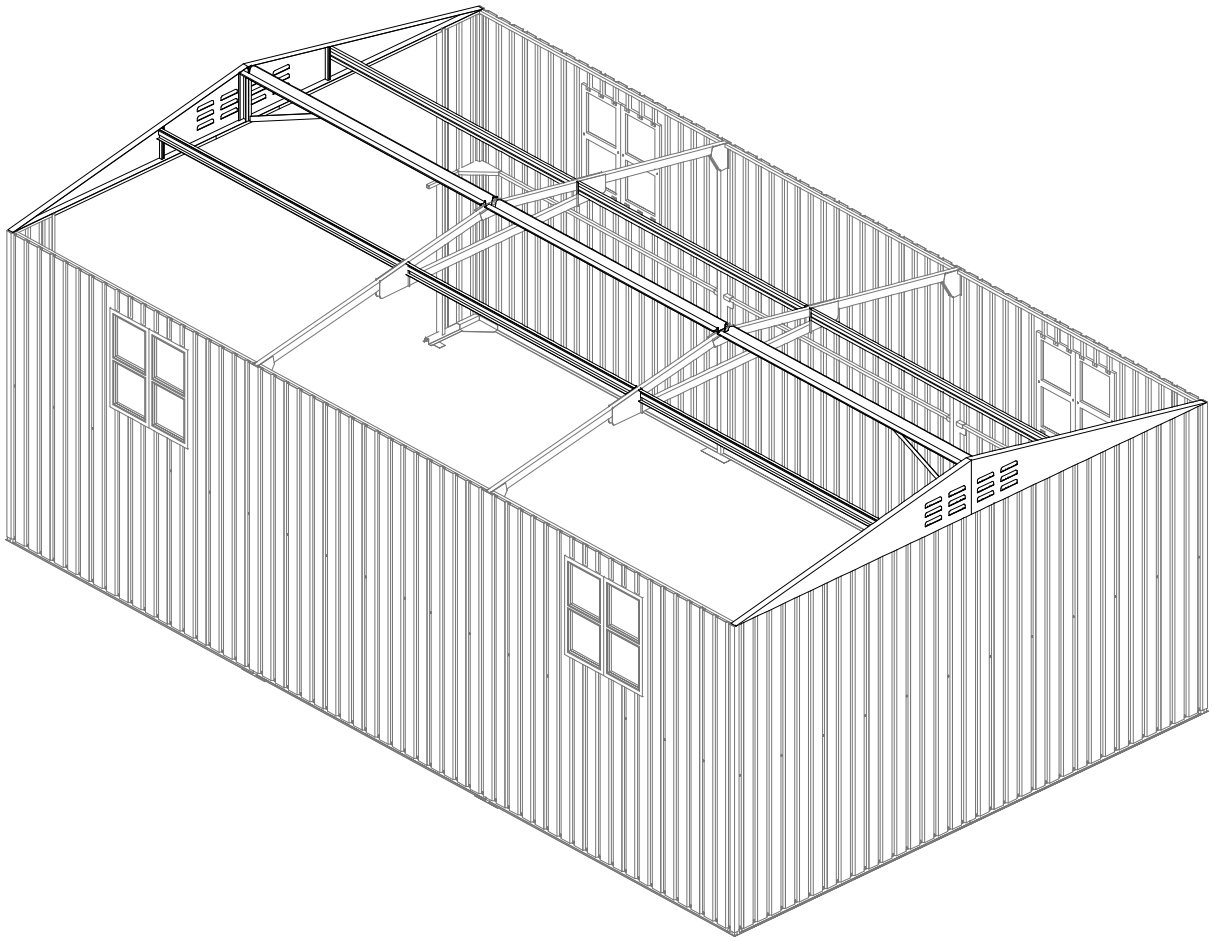
X2

STEP
37



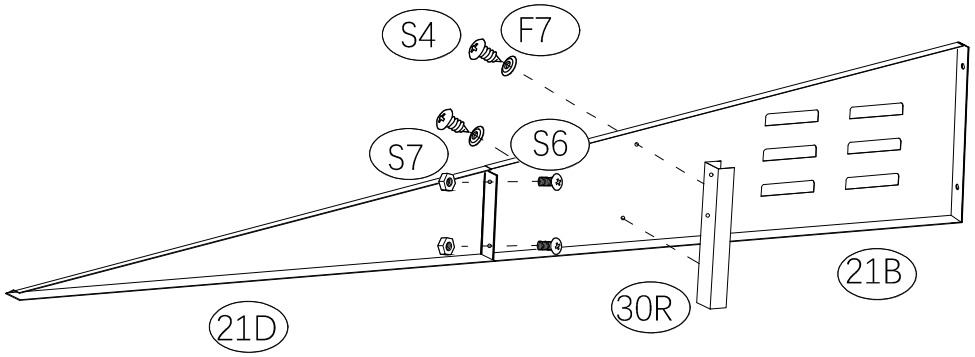
Part 4 :

Top Structure Installation



STEP 38

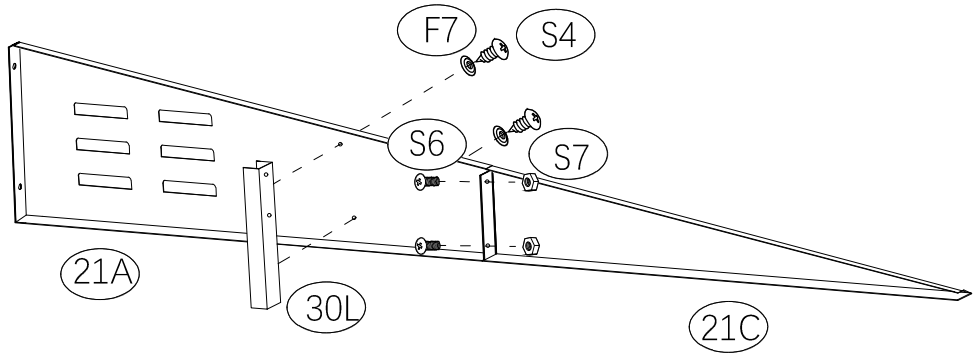
21D		2	F7		4
21B		2	S6		4
30R		2	S7		4
S4		4			



X2

STEP 39

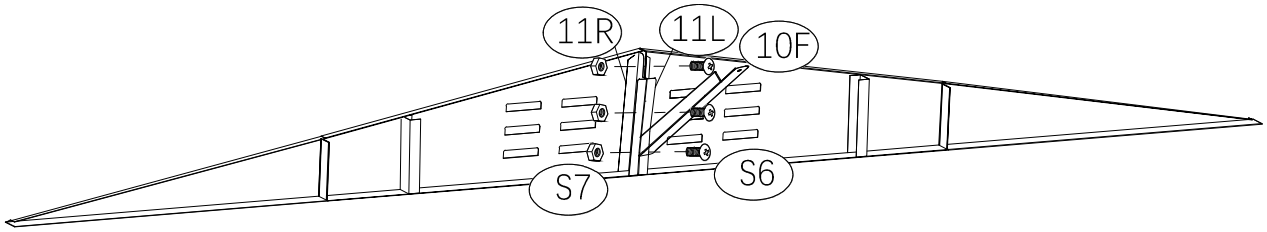
21C		2	F7		4
21A		2	S6		4
30L		2	S7		4
S4		4			

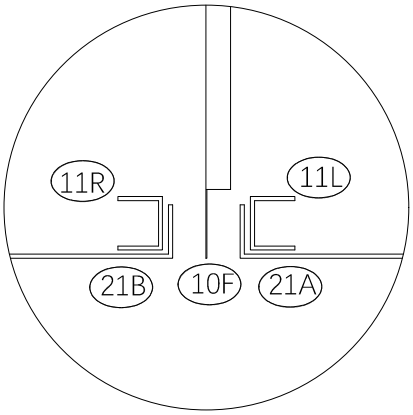


X2

STEP 40

11L		2
11R		2
10F		2
S6		6
S7		6

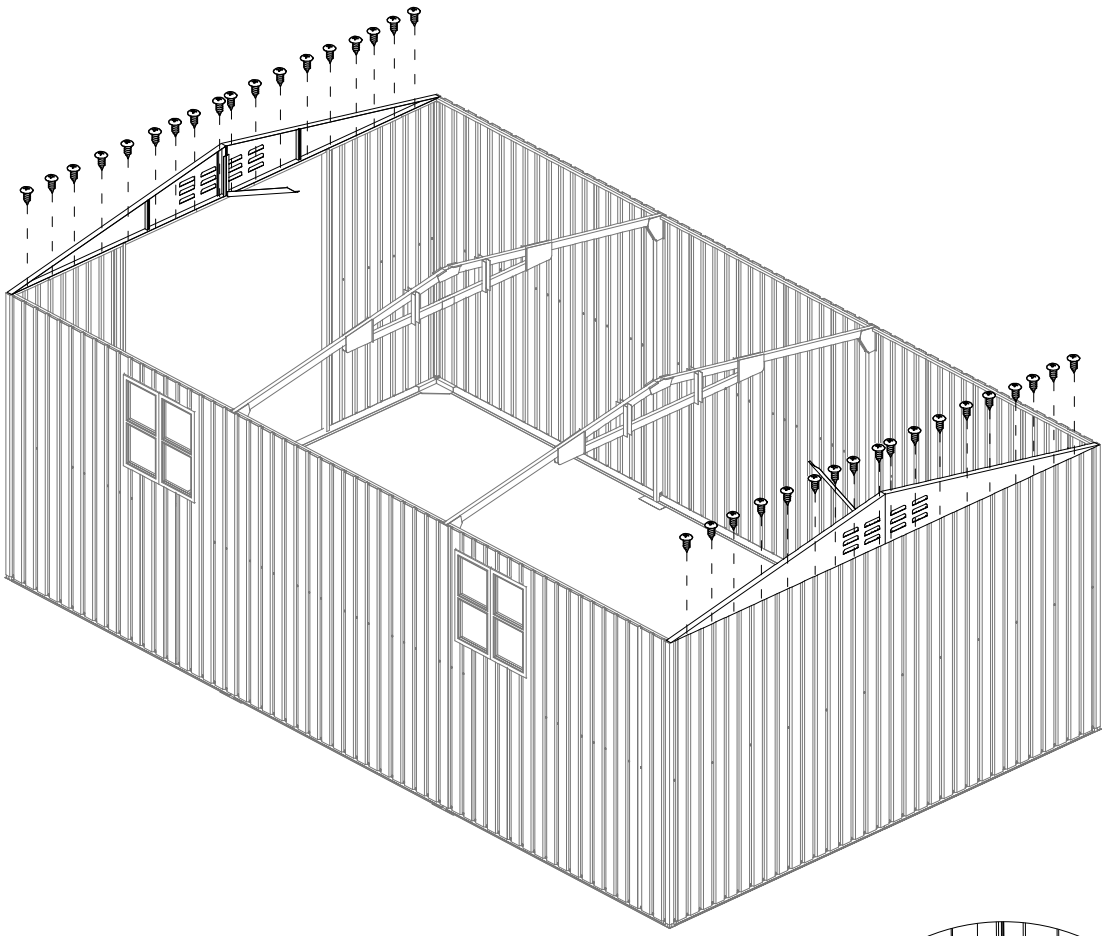


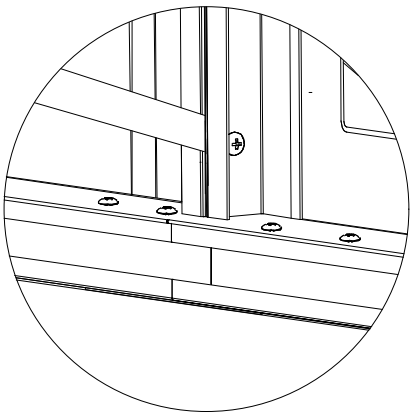


X2

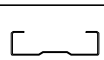
S4		36

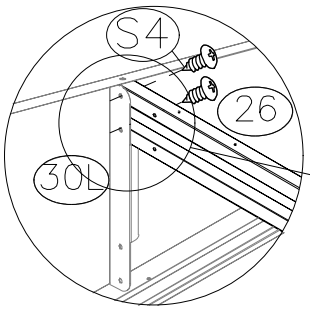
STEP 41

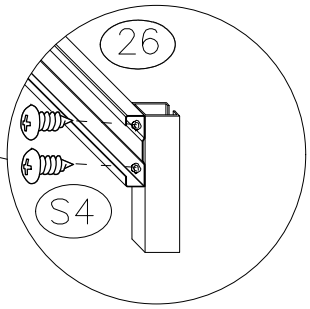


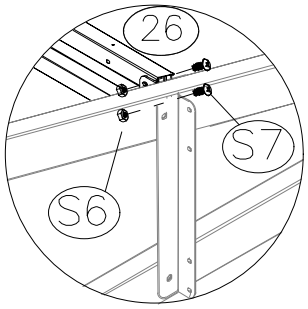


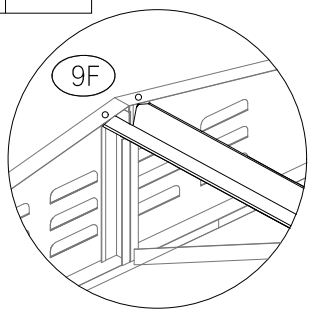
STEP 42

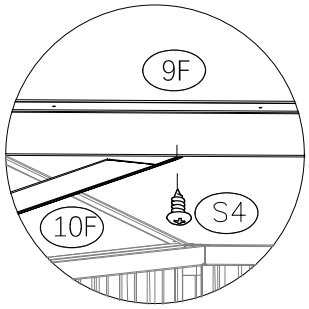
9F		1
25		1
26		1
S6		6
S7		6
S4		5

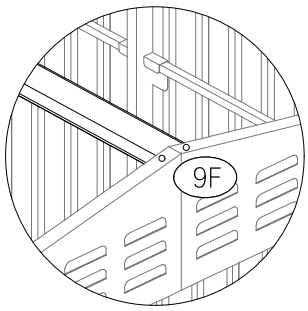


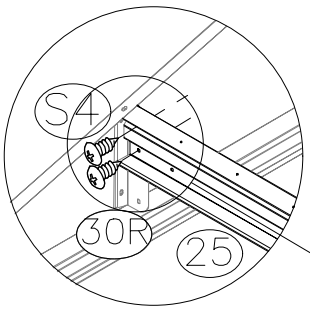


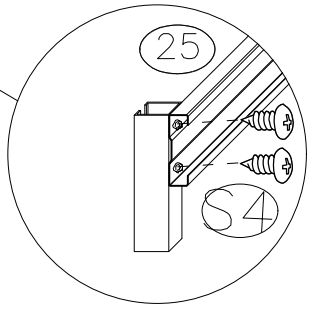


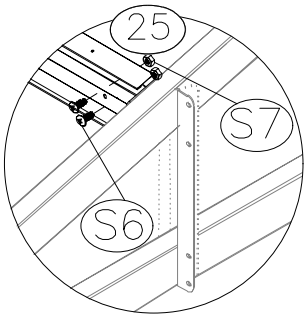






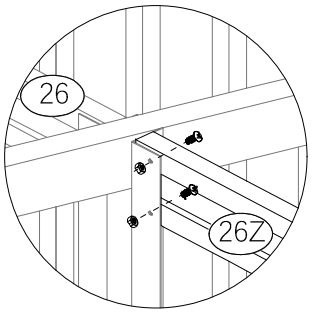


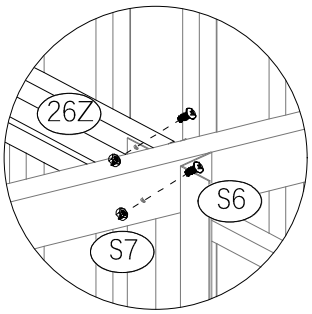


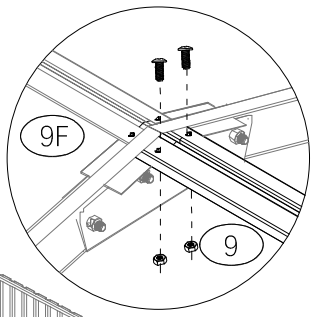


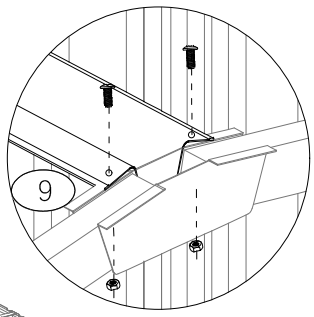
STEP 43

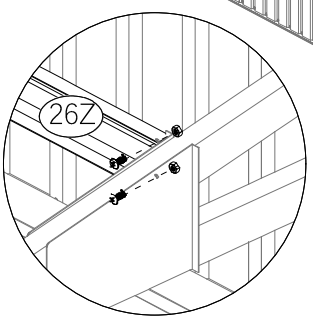
9		1
26Z		2
S6		12
S7		12



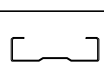


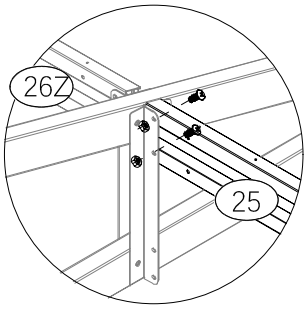


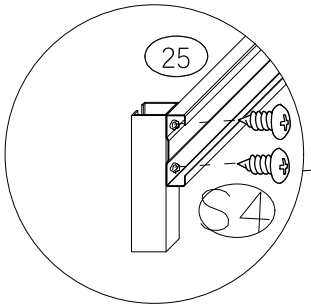


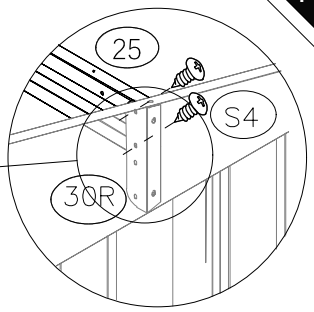


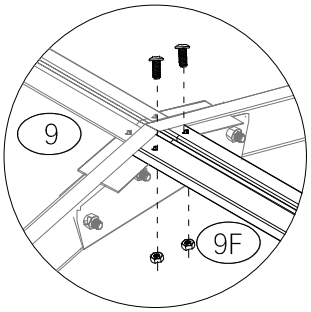
STEP 44

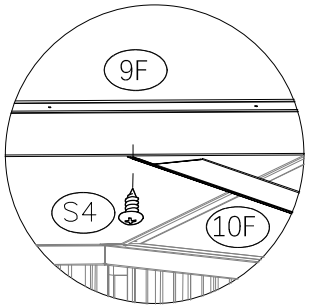
9F		1
25		1
26		1
S6		6
S7		6
S4		5

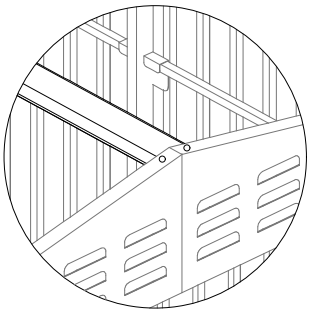


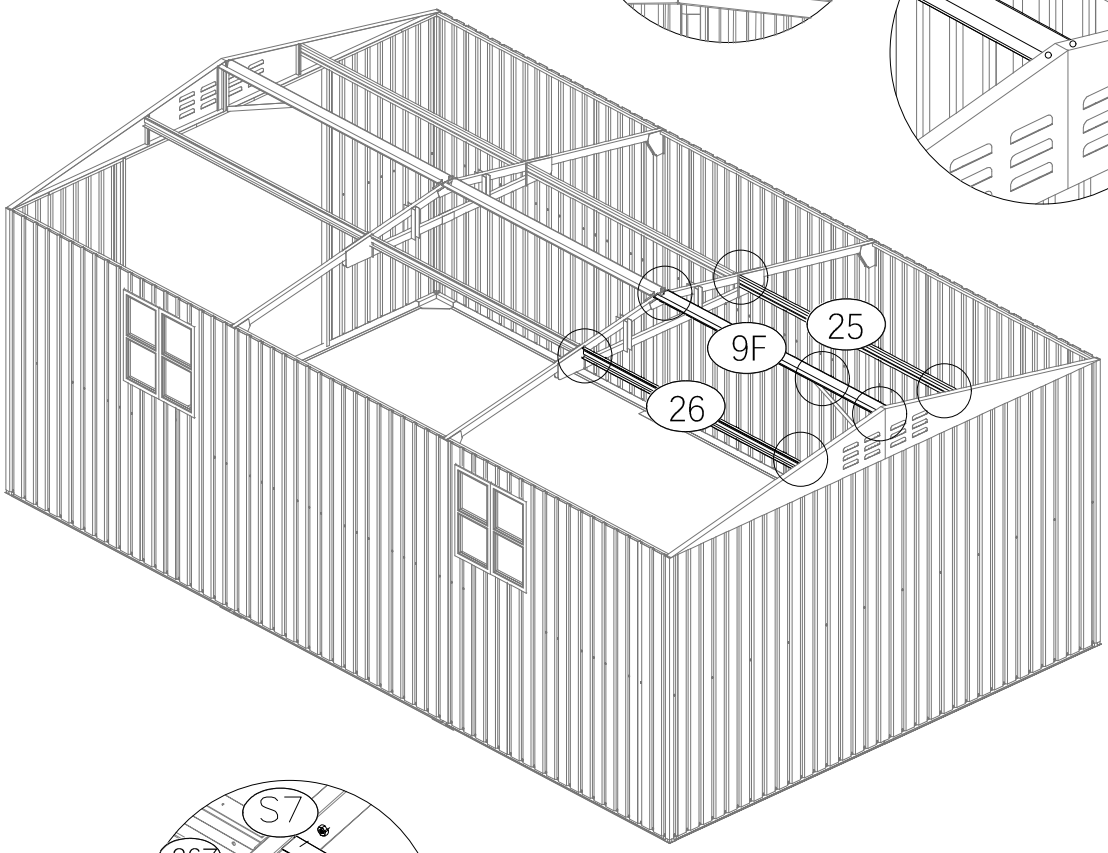


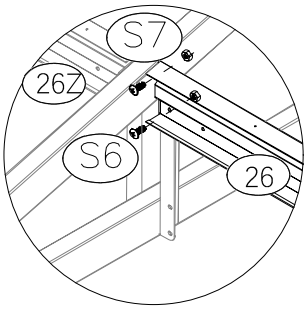


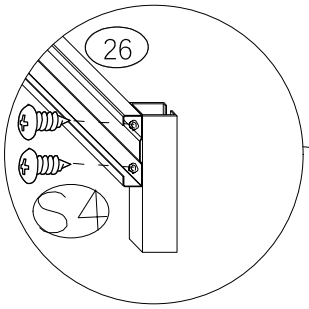


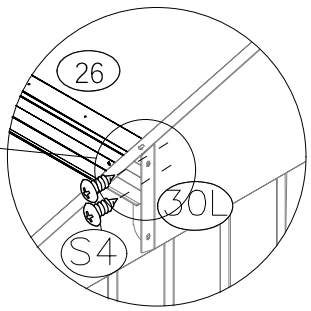






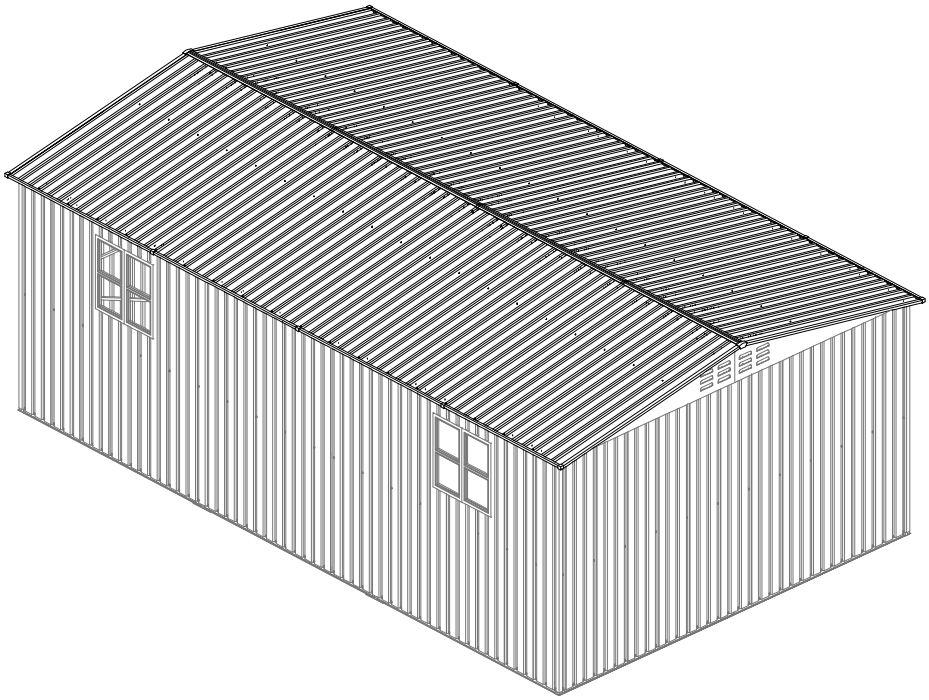


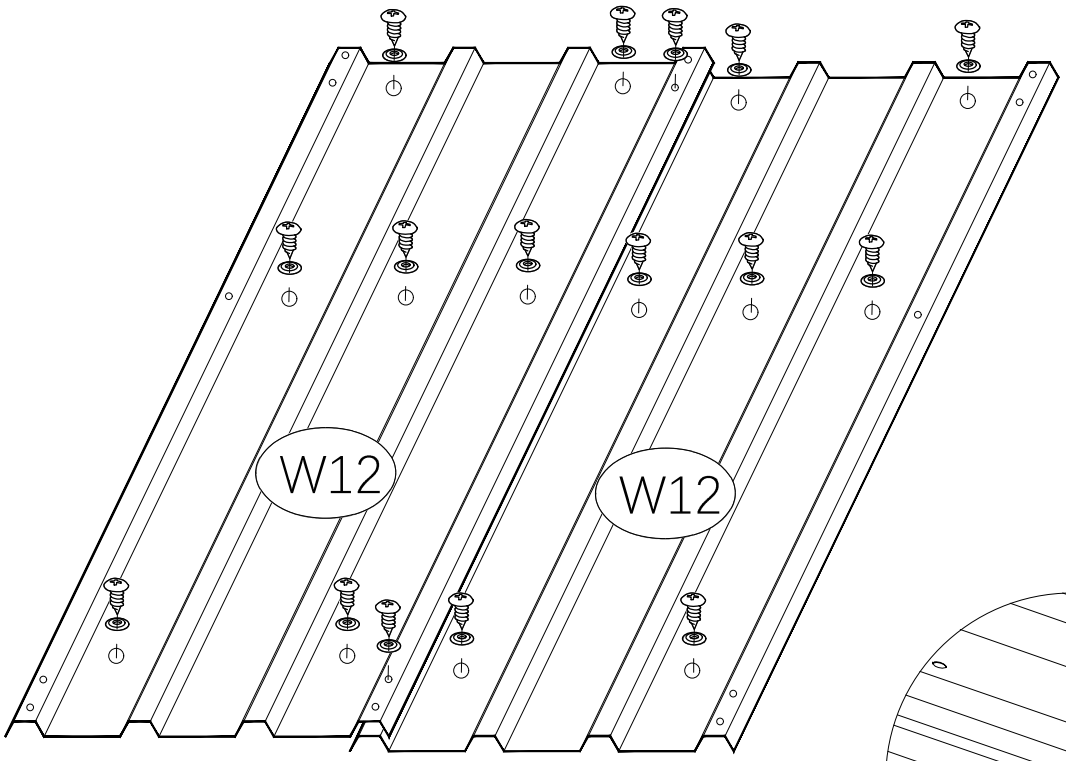


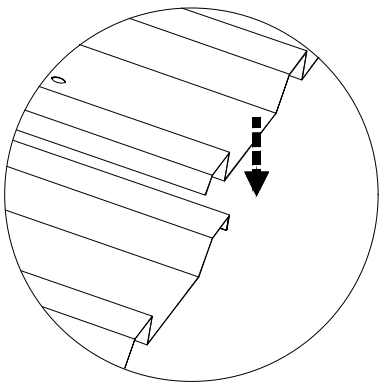


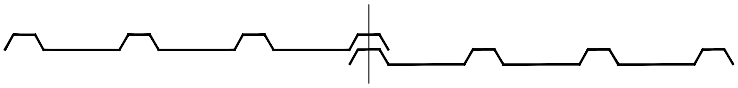
Part 5 :

Roof Shingle Installation



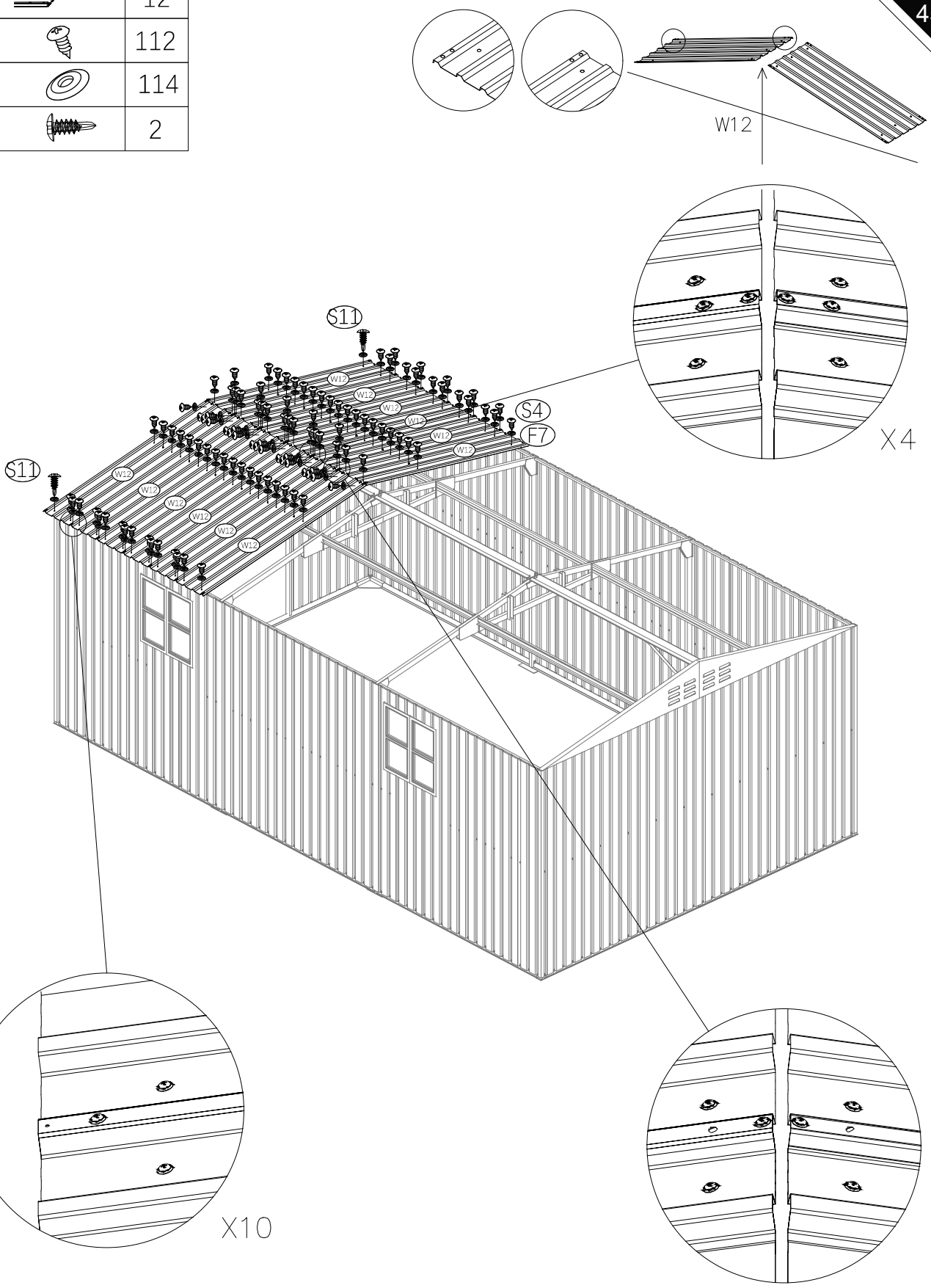




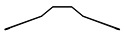


W12		12
S4		112
F7		114
S10		2

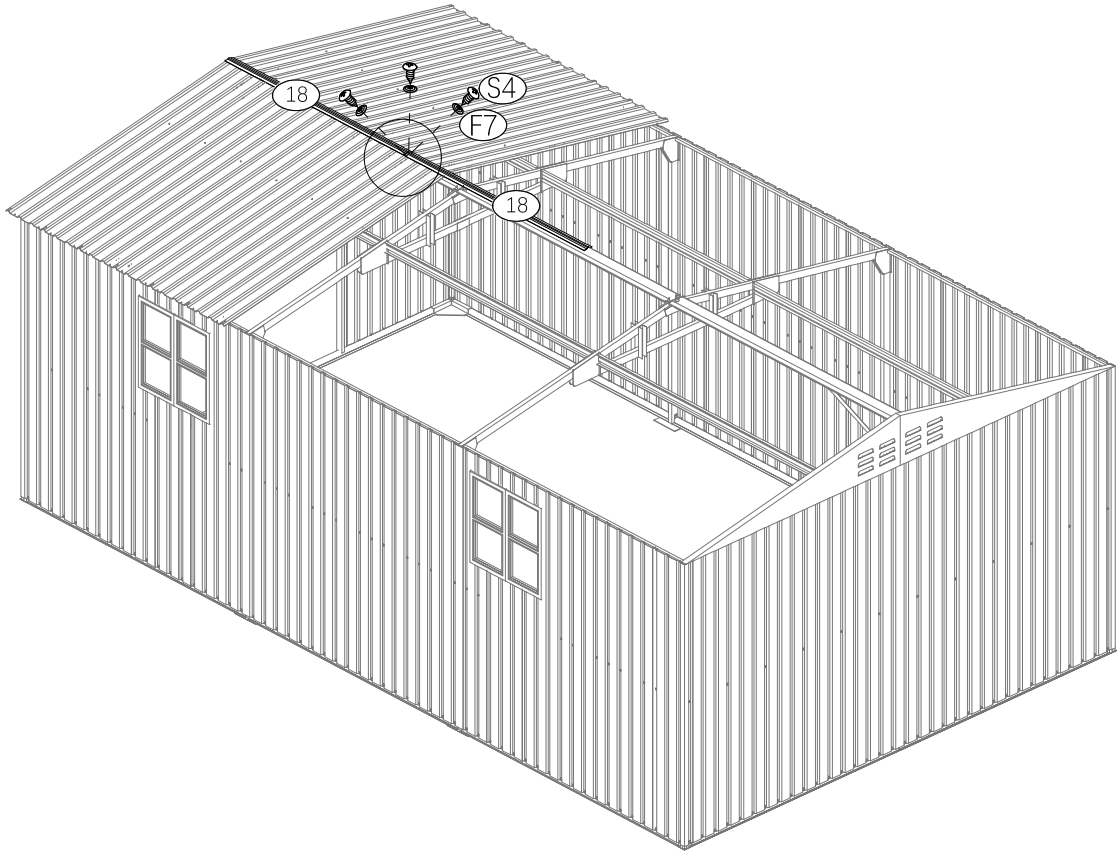
STEP 45

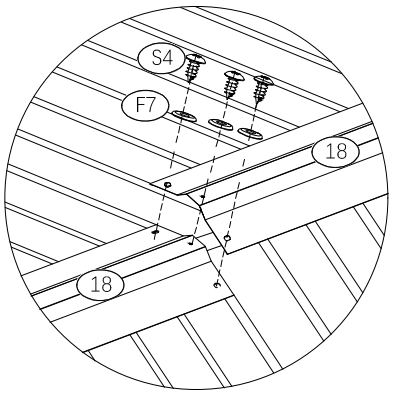


Note: When assembling difficult parts with screws S4, use screws S8 or S10 as alternatives

18		2
S4		3
F7		3

STEP 46

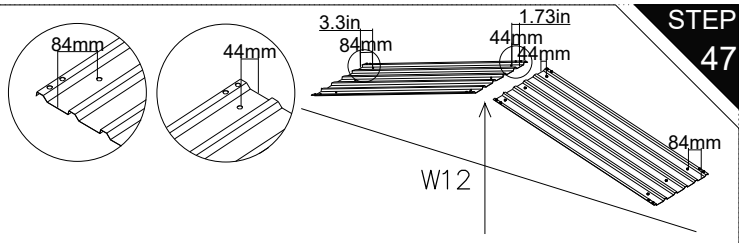


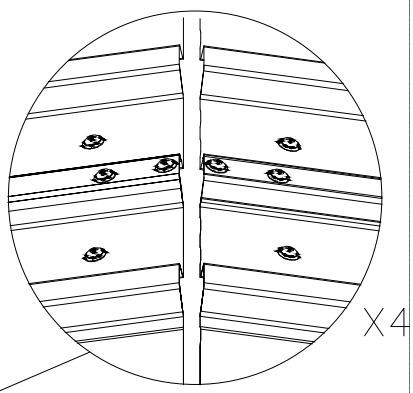


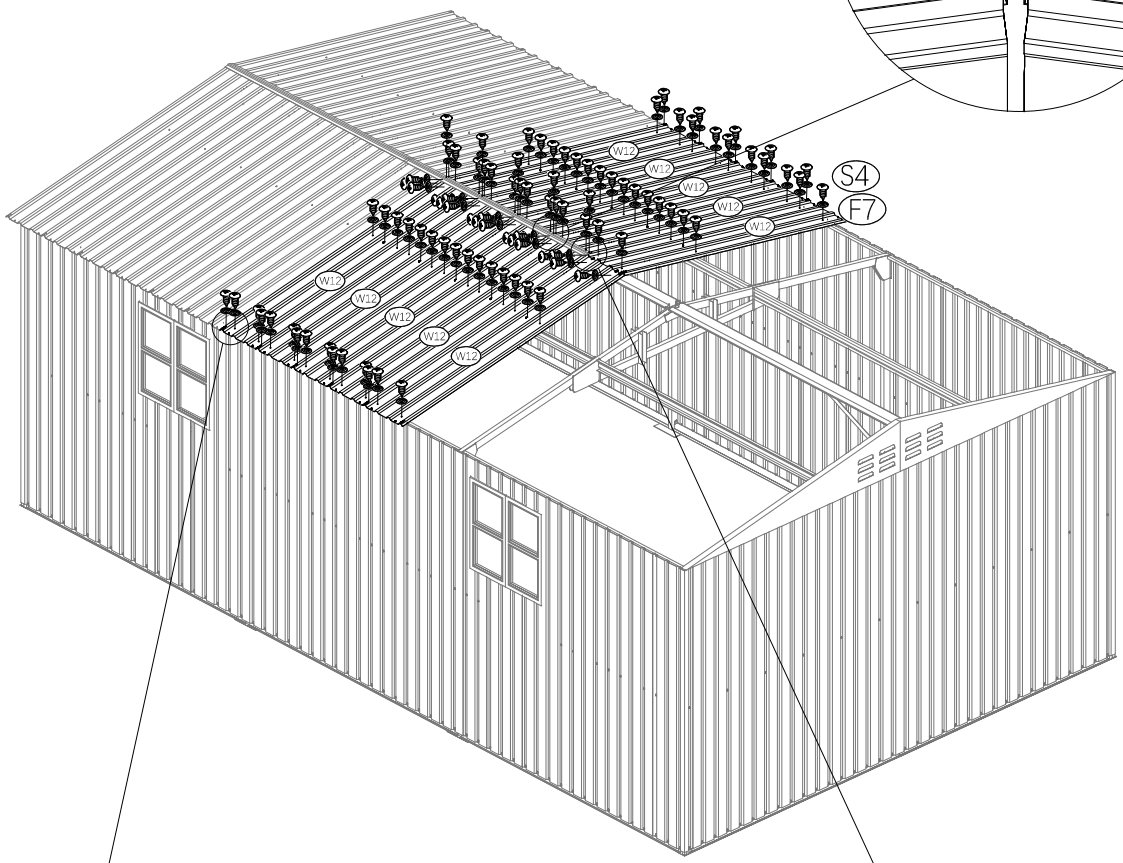
Note: When assembling difficult parts with screws S4, use screws S8 or S10 as alternatives

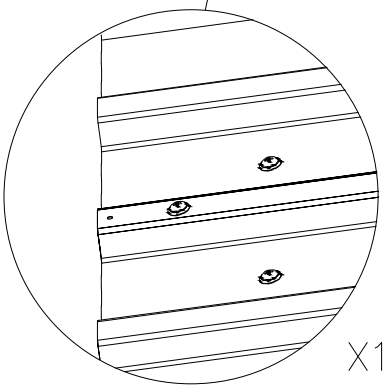
W12		10
S4		98
F7		98

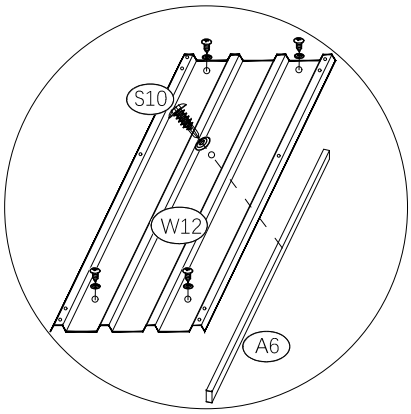
STEP 47

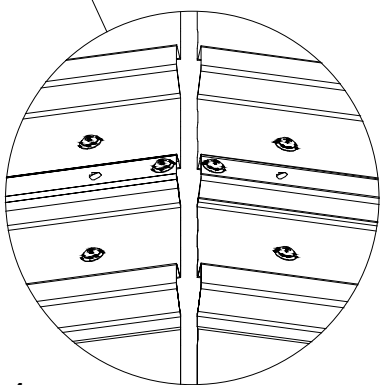




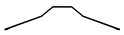


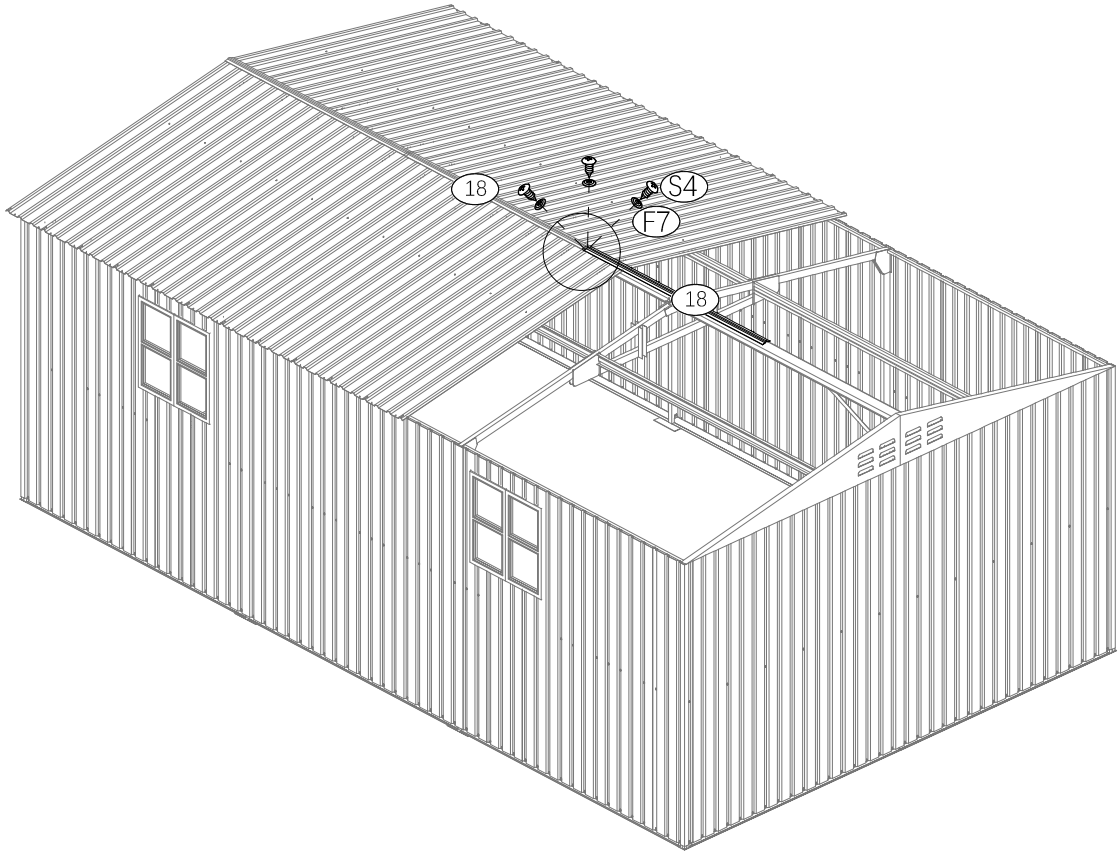


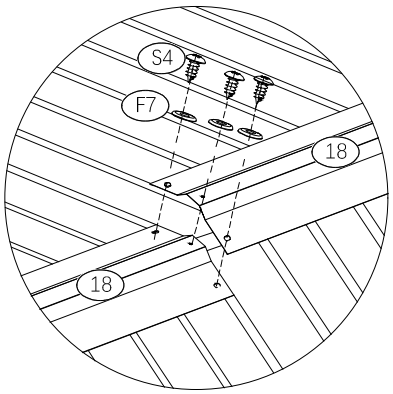




Note: When assembling difficult parts with screws S4, use screws S8 or S10 as alternatives

18		1
S4		3
F7		3

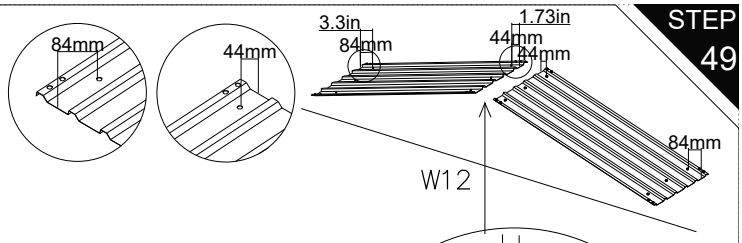


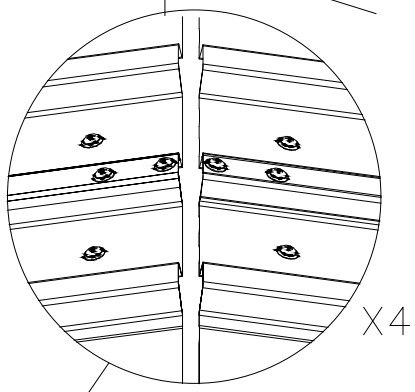


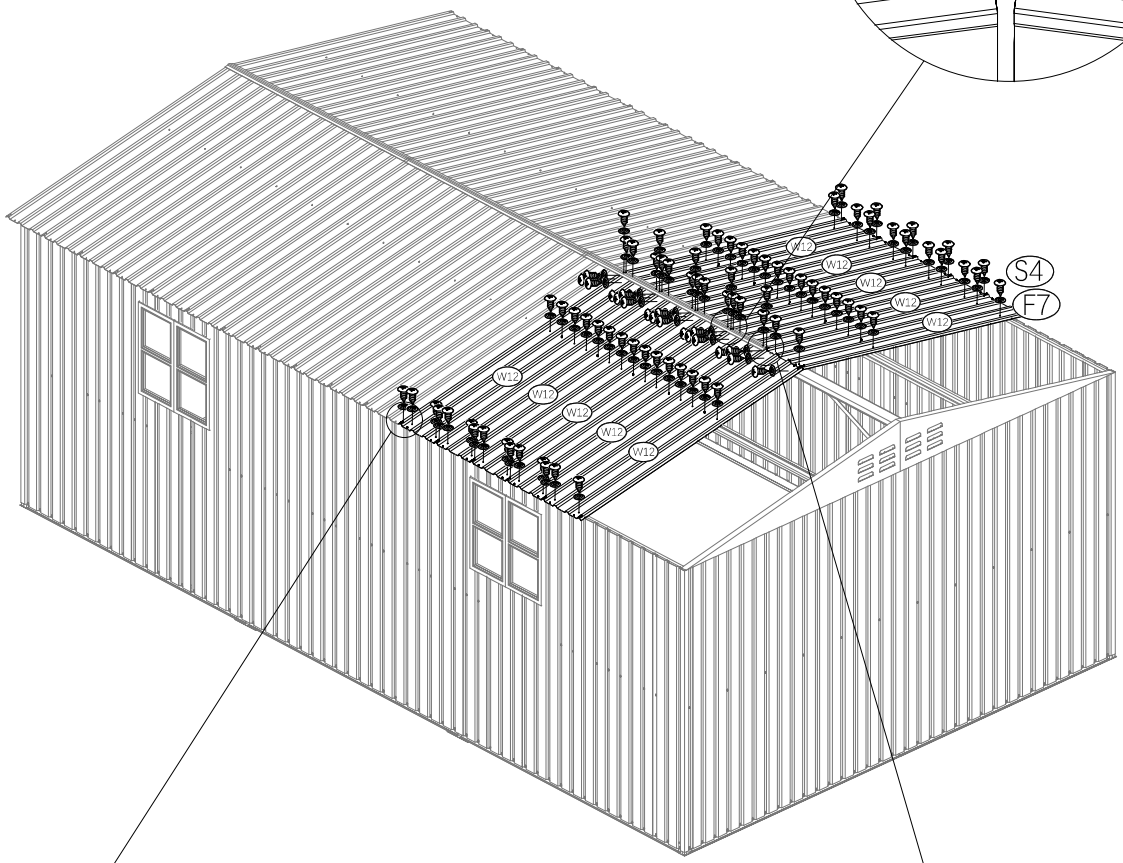
Note: When assembling difficult parts with screws S4,
use screws S8 or S10 as alternatives

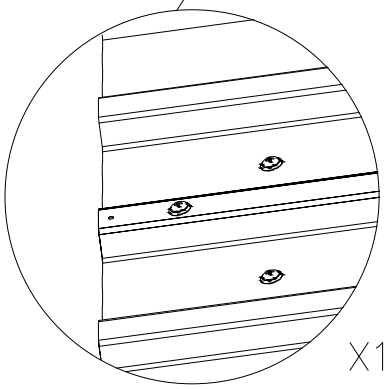
W12		10
S4		98
F7		98

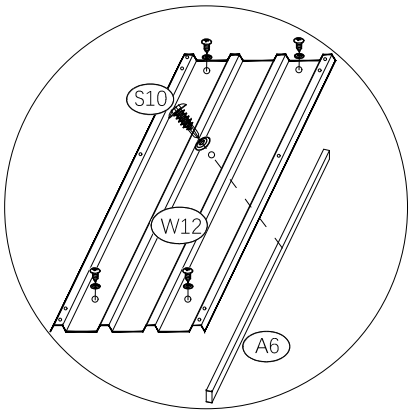
STEP 49

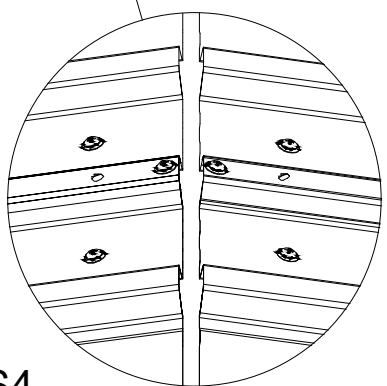






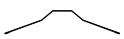


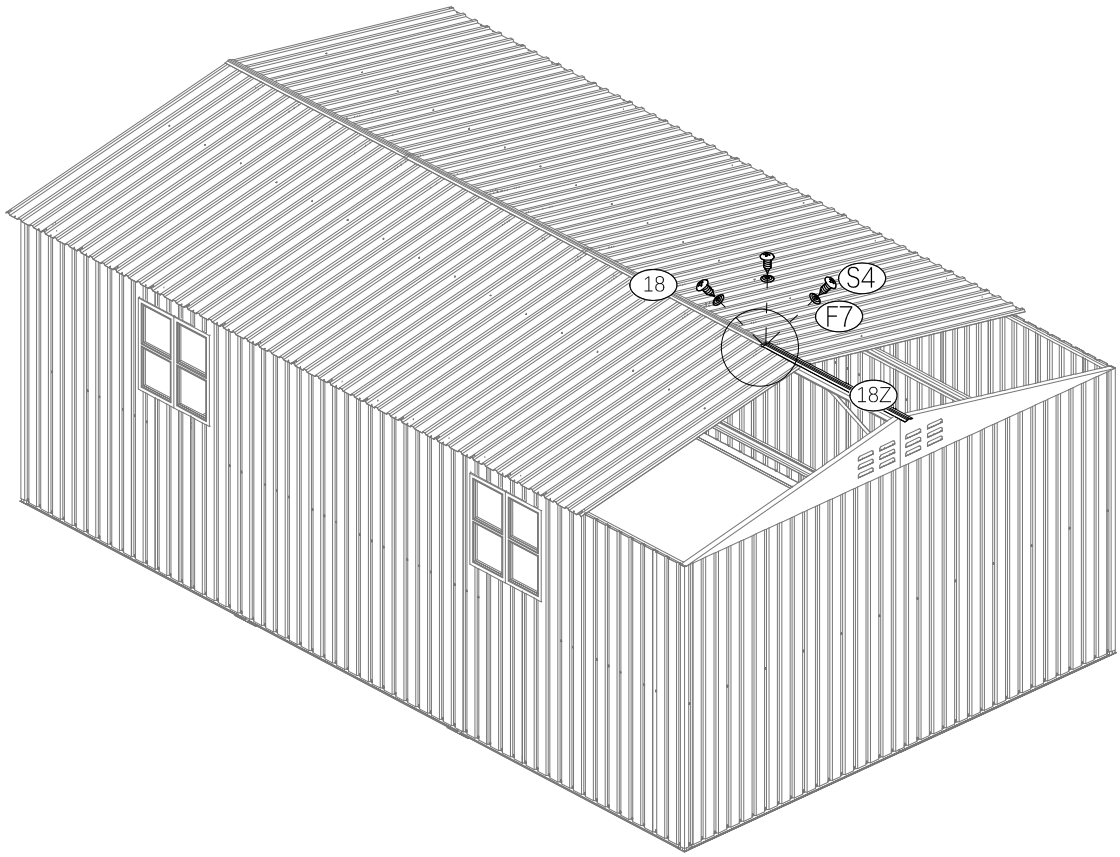


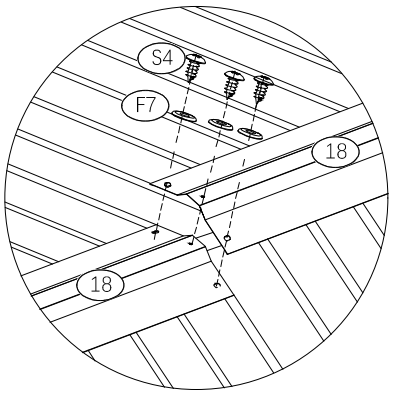


Note: When assembling difficult parts with screws S4, use screws S8 or S10 as alternatives

STEP 50

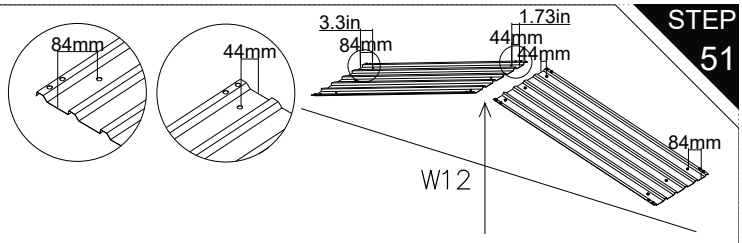
18Z		1
S4		3
F7		3



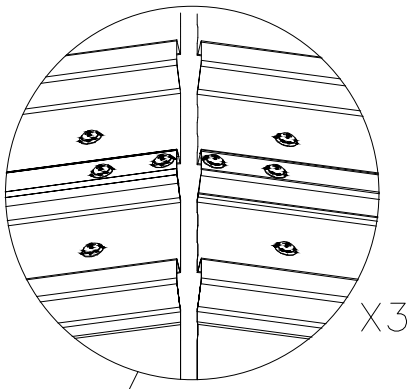


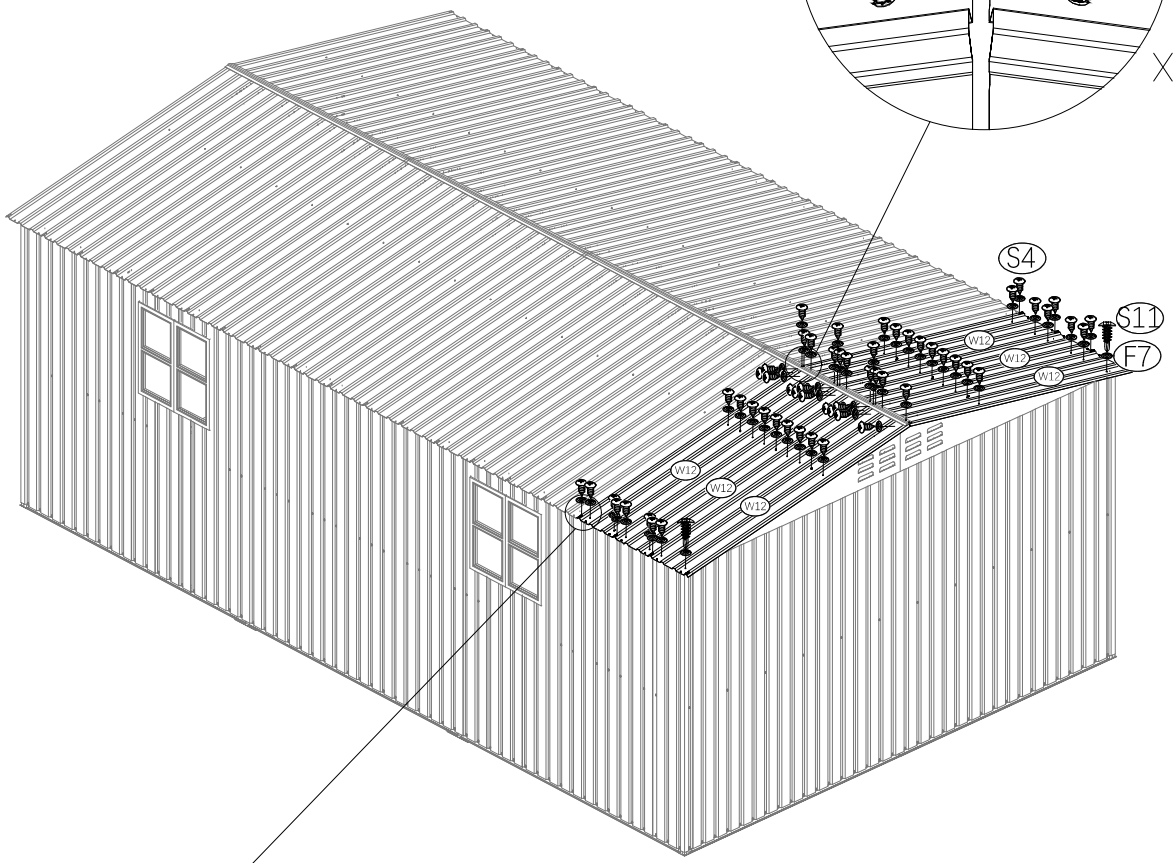
Note: When assembling difficult parts with screws S4, use screws S8 or S10 as alternatives

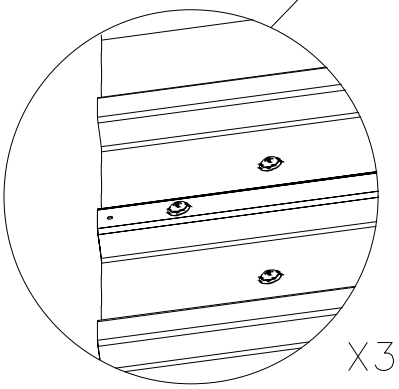
W12		6
S4		58
F7		60
S10		2



STEP 51



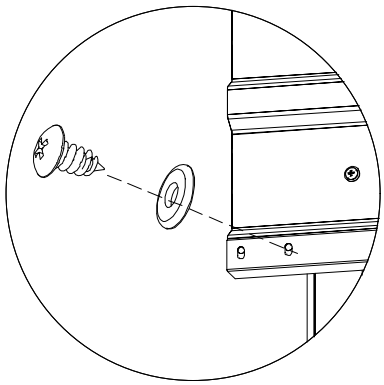


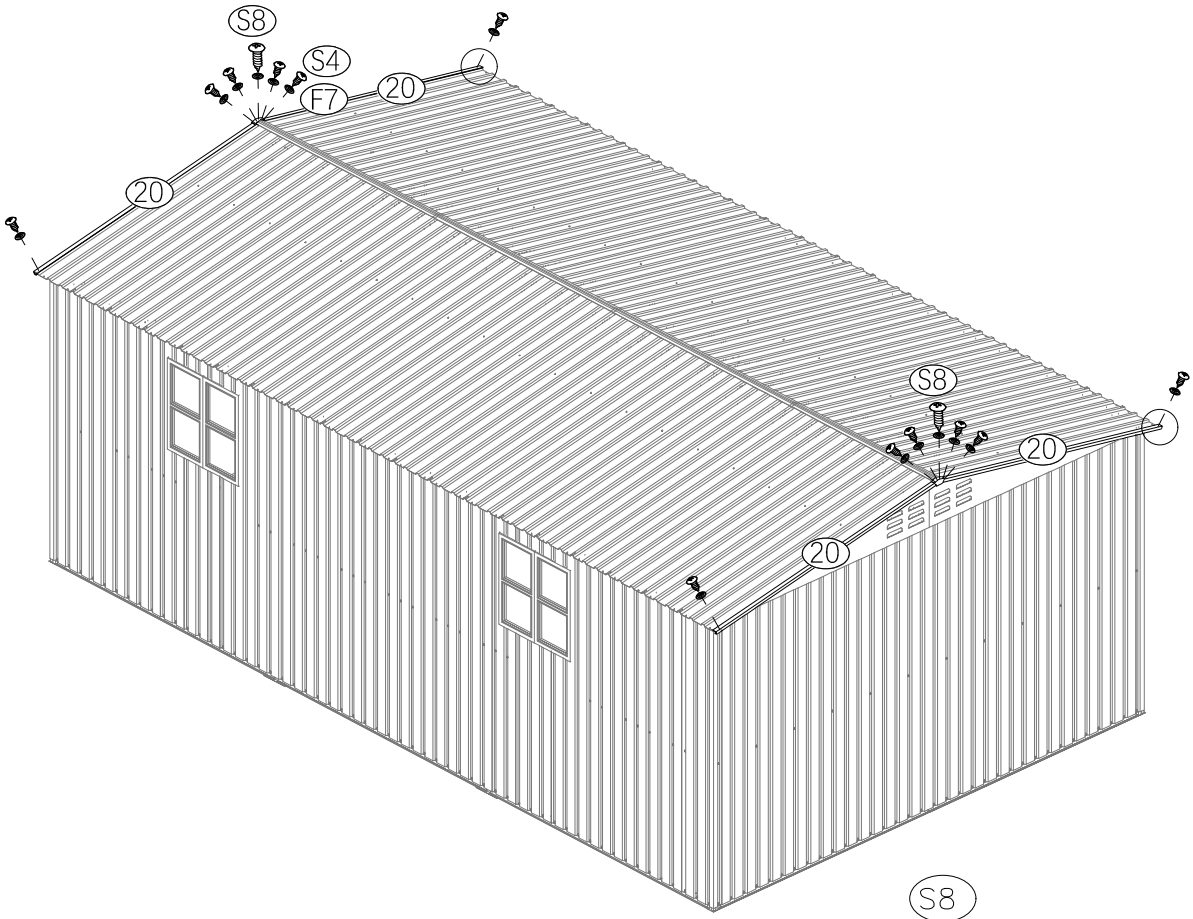


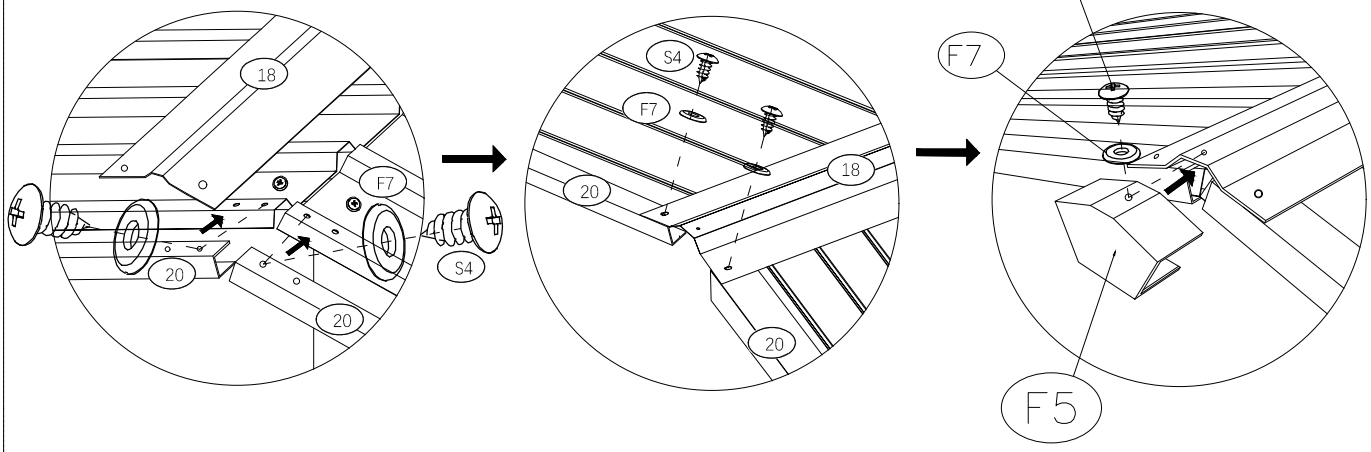
Note: When assembling difficult parts with screws S4, use screws S8 or S10 as alternatives

F5		2
20		4
S4		12
F7		14
S8		2

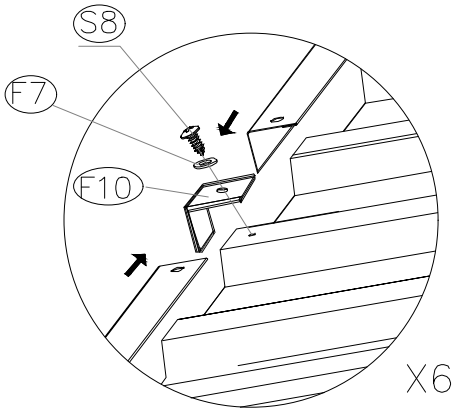
STEP 52

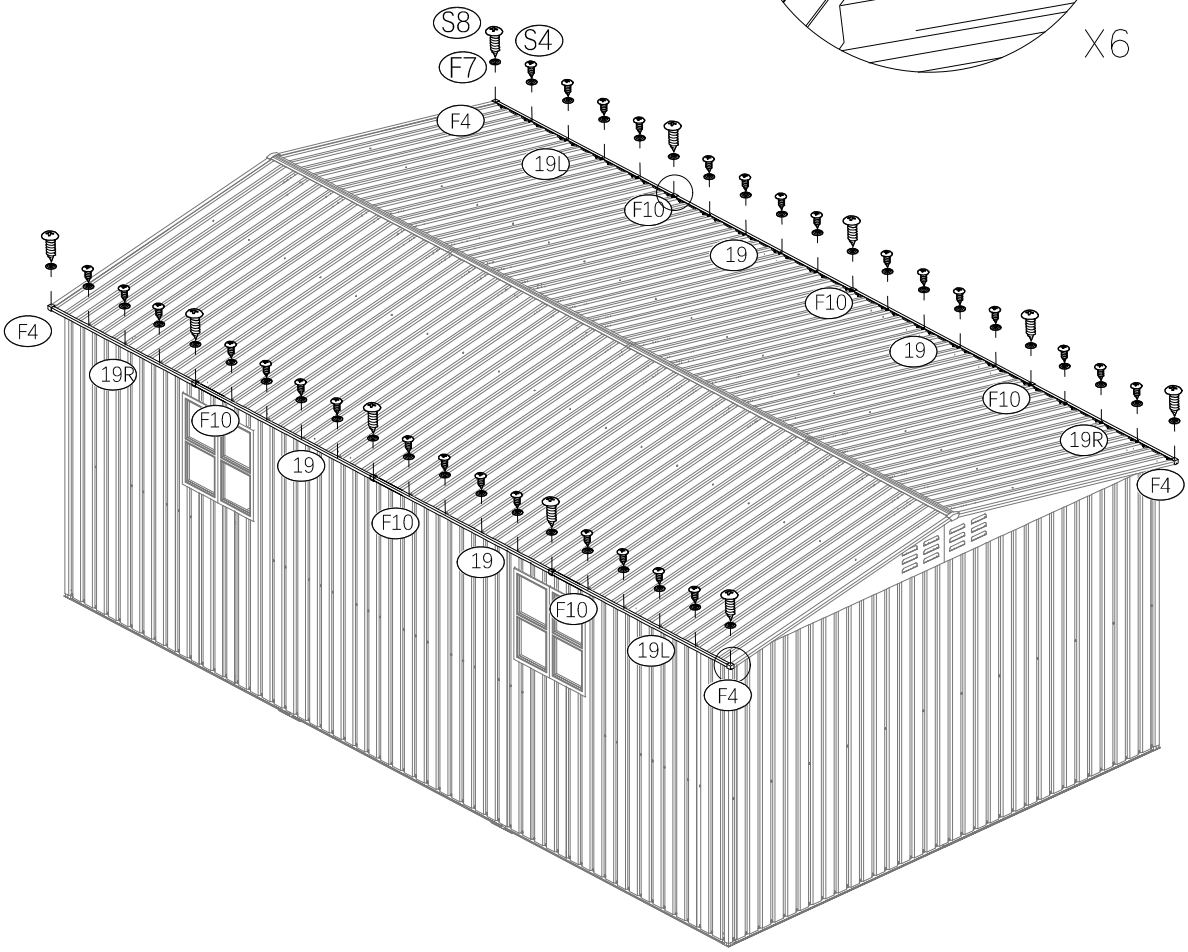


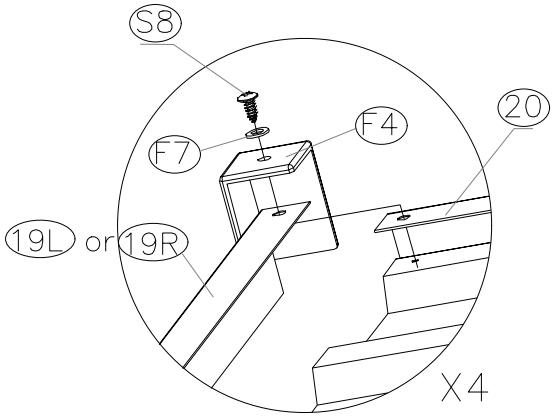


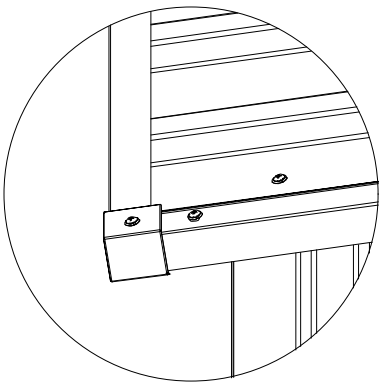


F4		4	S4		30
F10		6	S8		10
19		4	F7		40
19L		2			
19R		2			



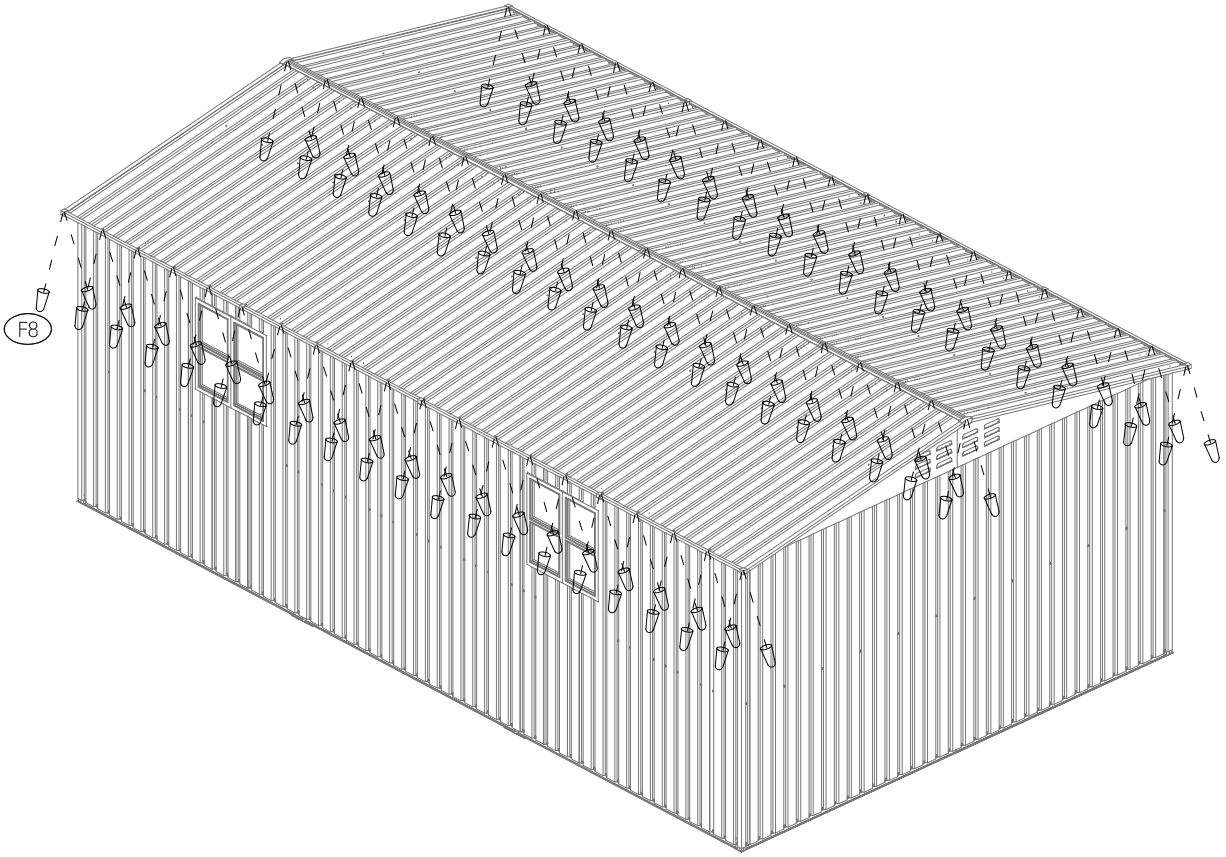


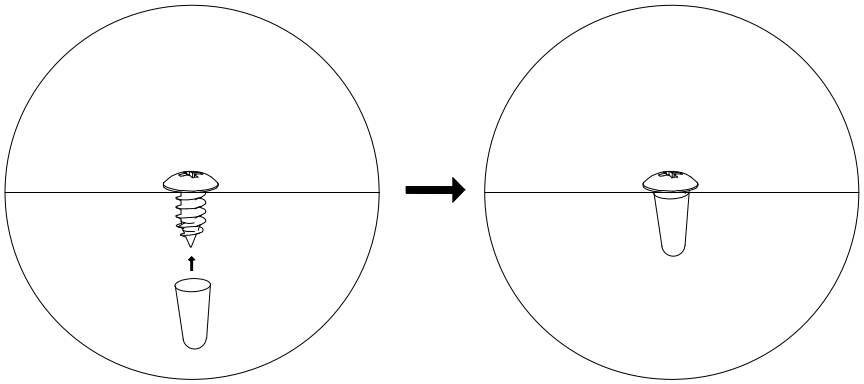




F8		120

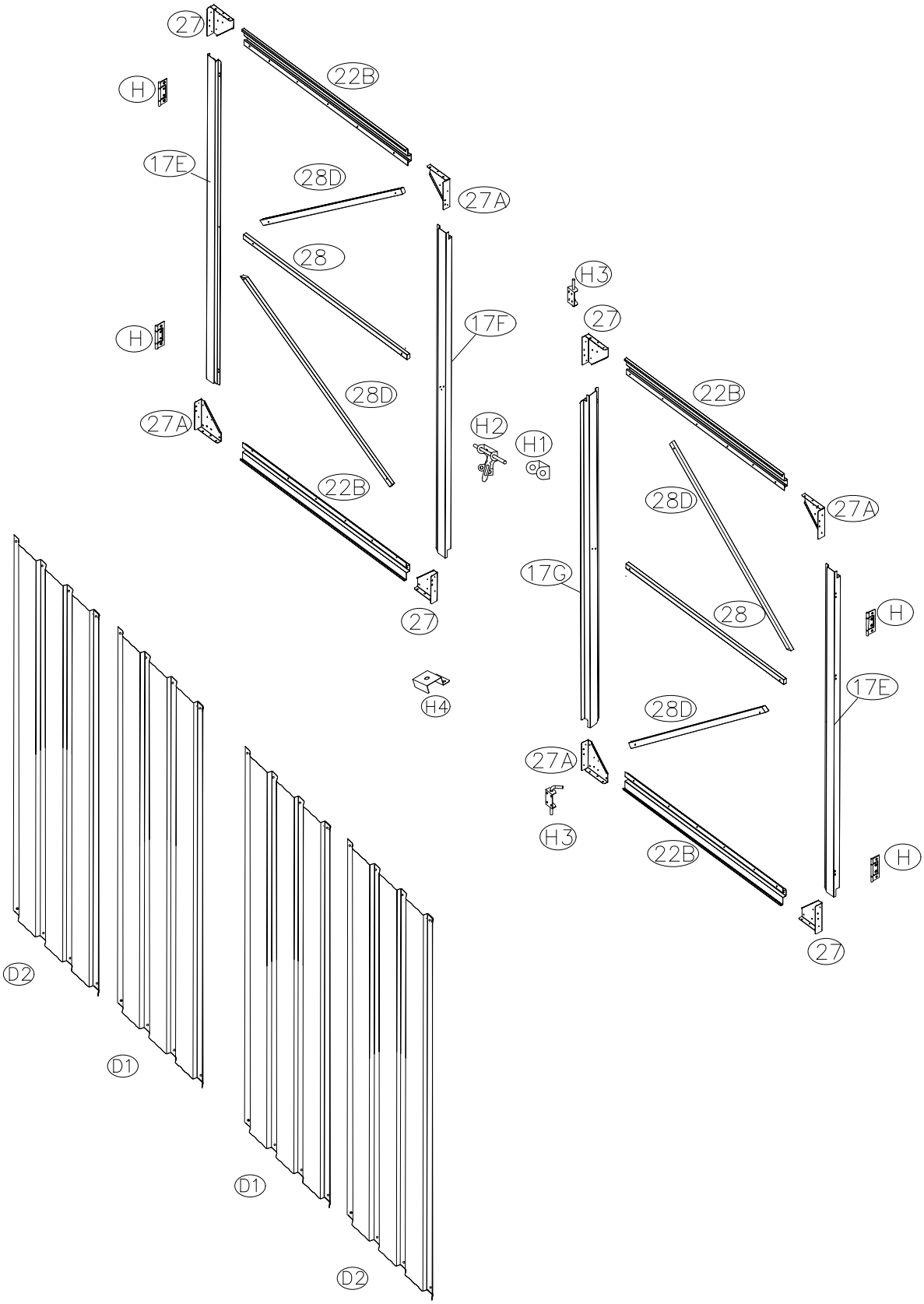
STEP 54



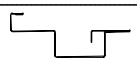


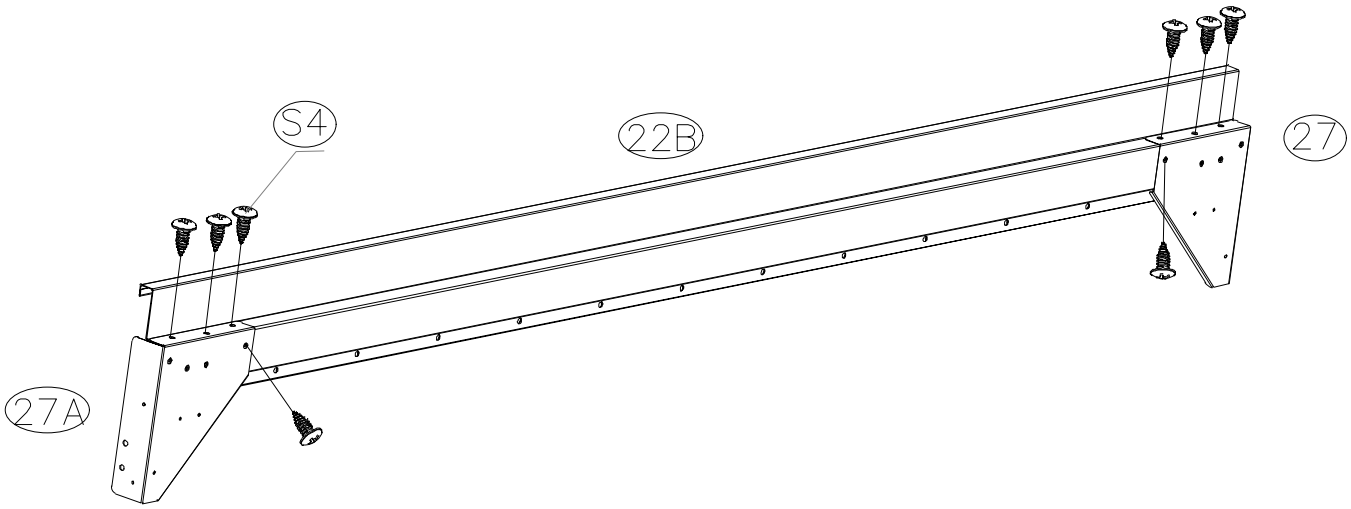
Part 6 :

Door Installation



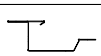
STEP 55

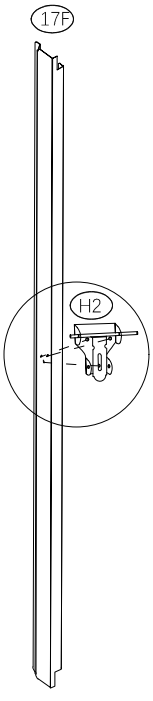
22B		4
27		4
27A		4
S4		32

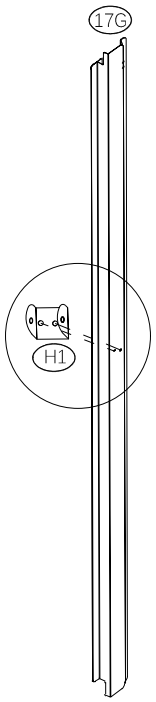


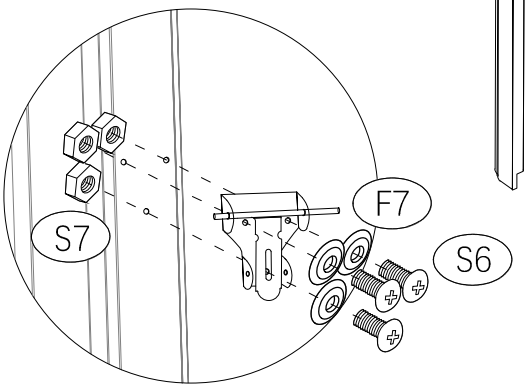
X4

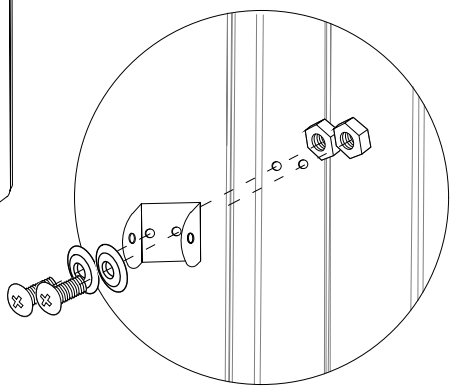
STEP 56

17F		1
17G		1
H1		1
H2		1
F7		5
S6		5
S7		5







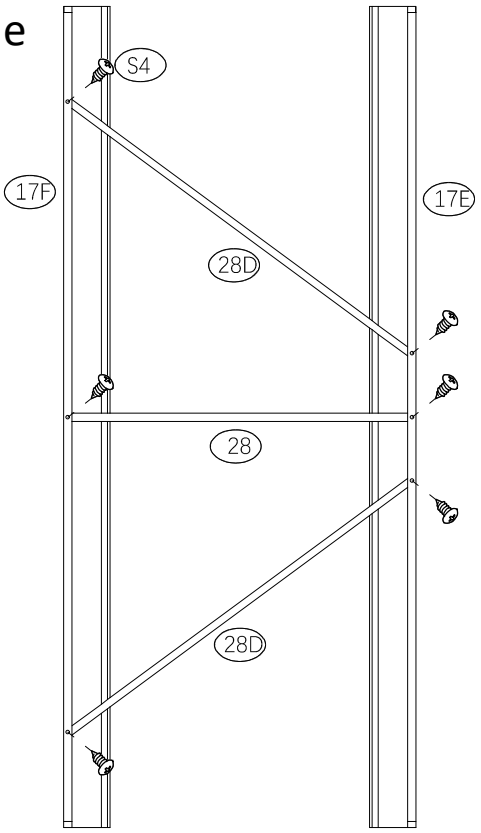


STEP 57

17F		1
17E		1
28		1
28D		2
S4		6

Left Door

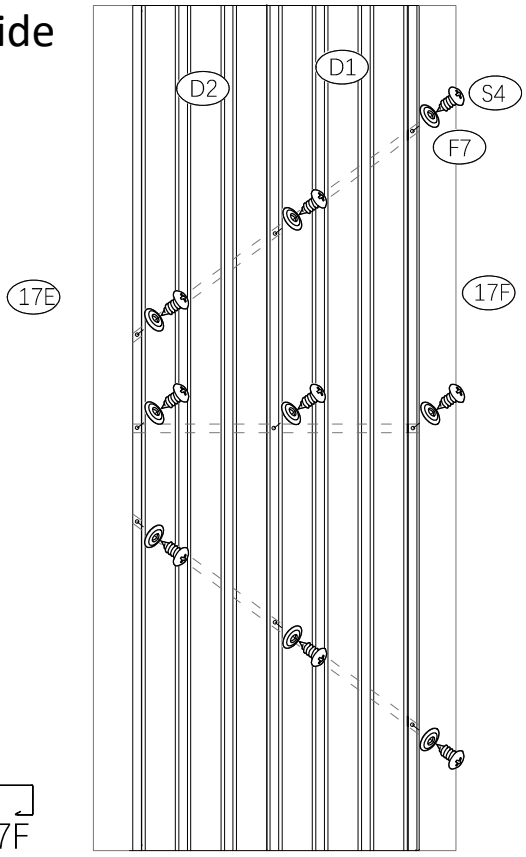
Inside

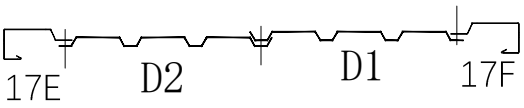


STEP 58

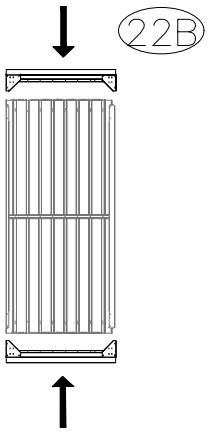
D1		1
D2		1
S4		9
F7		9

Outside

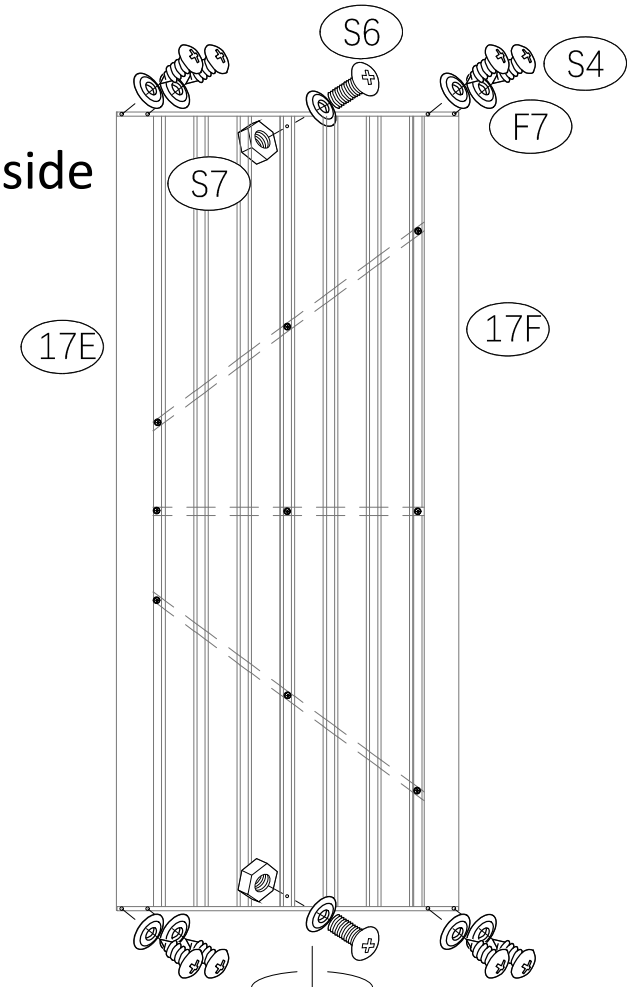


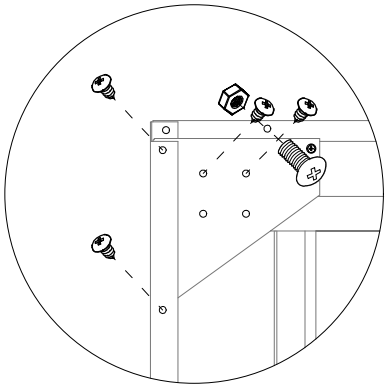


S4		24
F7		10
S6		8
S7		8

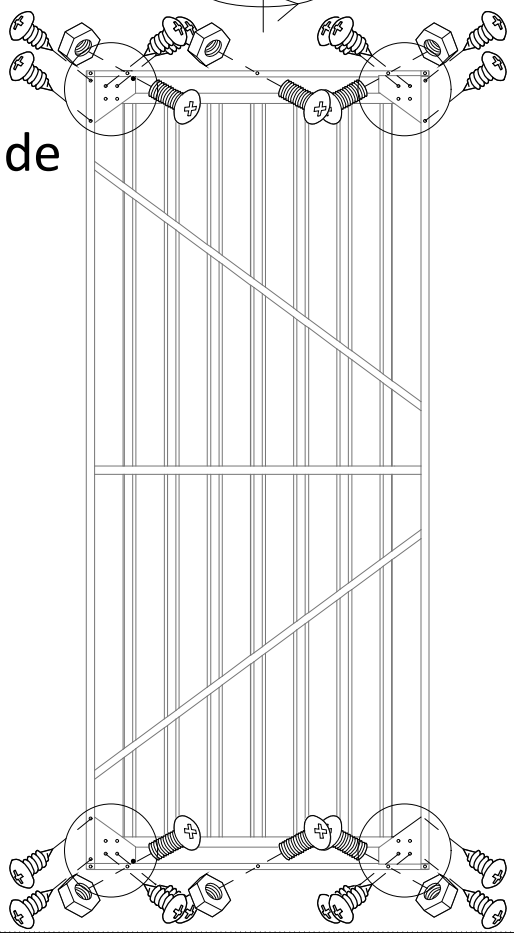


Outside



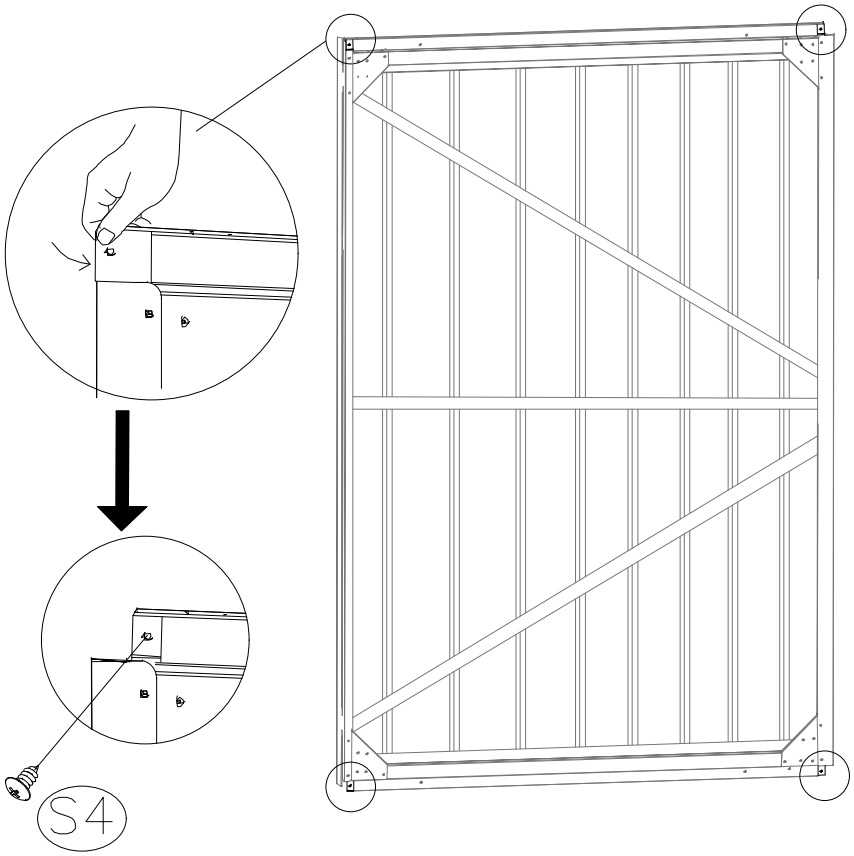


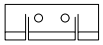
Inside



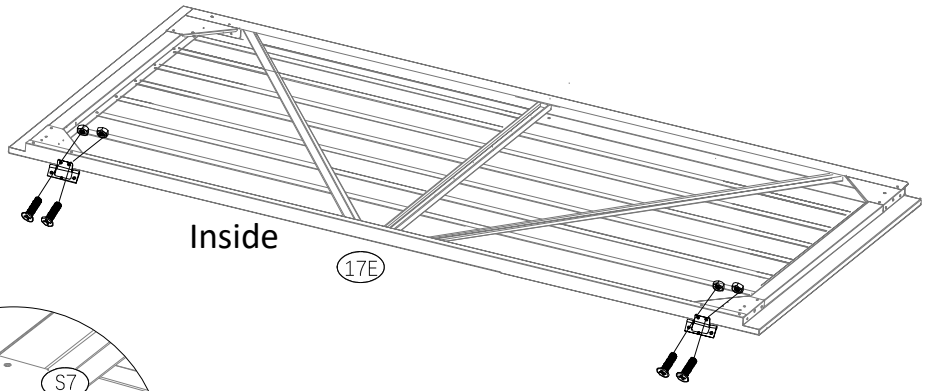
S4		4

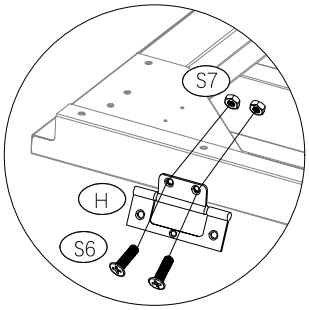
STEP 60



H		2
S6		4
S7		4

STEP 61



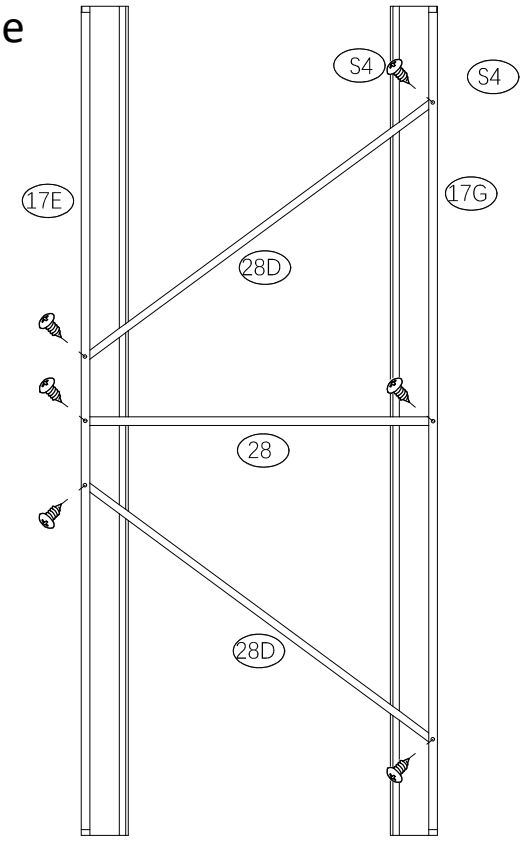


62

17G		1
17E		1
28		1
28D		2
S4		6

Left Door

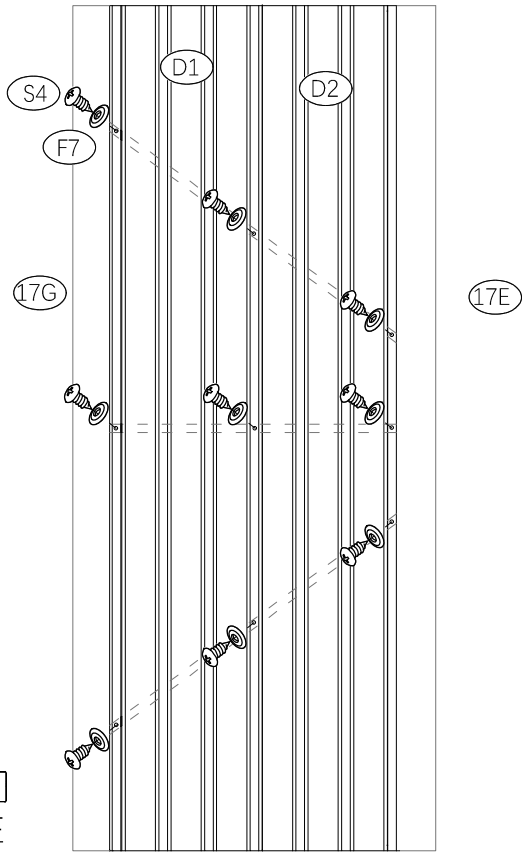
Inside

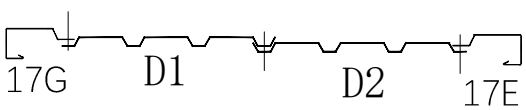


STEP 63

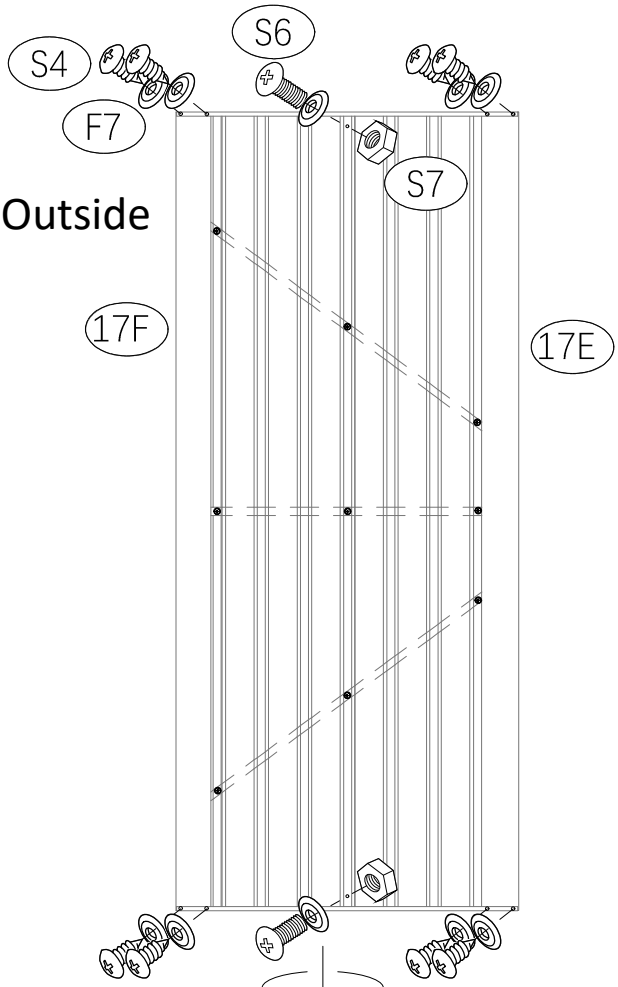
D1		1
D2		1
S4		9
F7		9

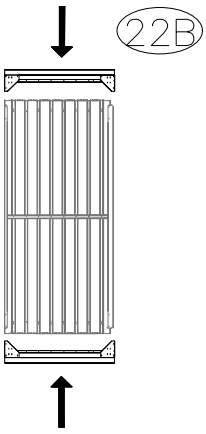
Outside

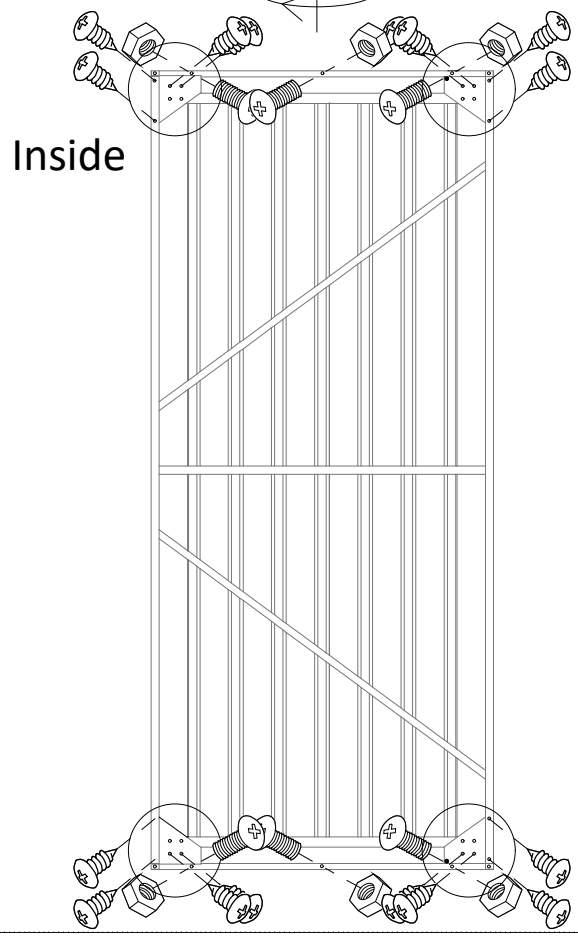


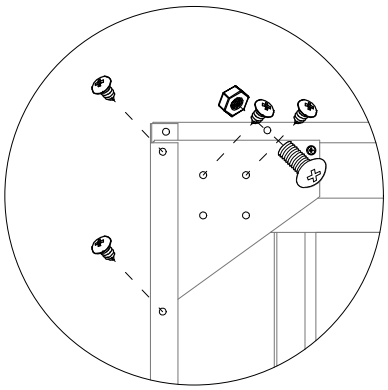


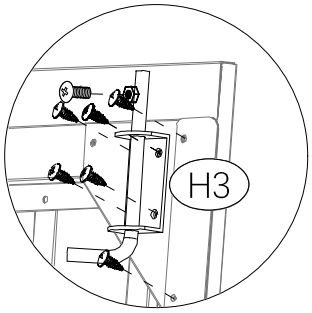
H3		2
S4		28
F7		10
S6		8
S7		8

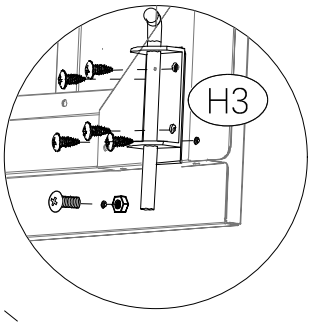






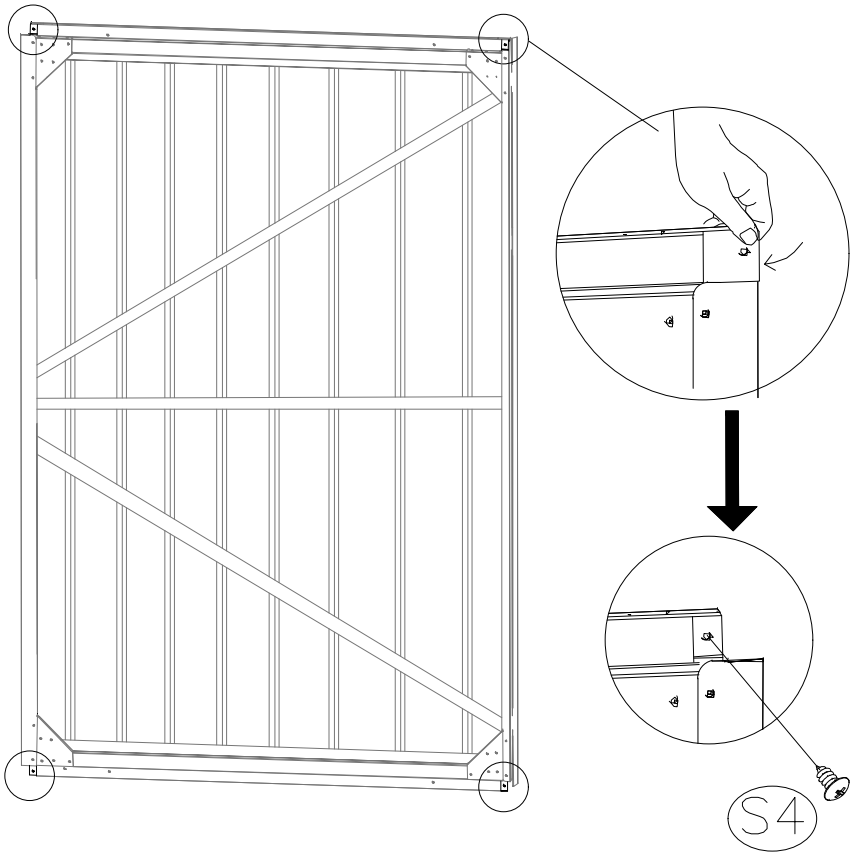


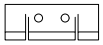




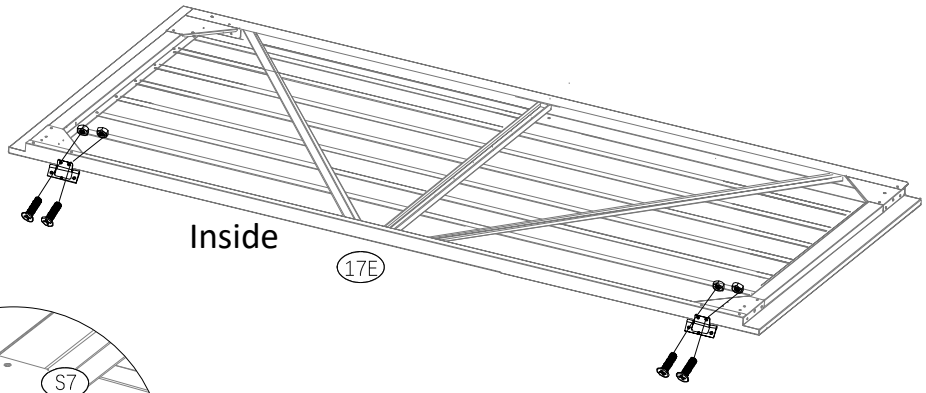
S4		4

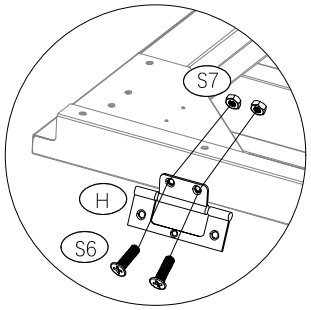
STEP 65



H		2
S6		4
S7		4

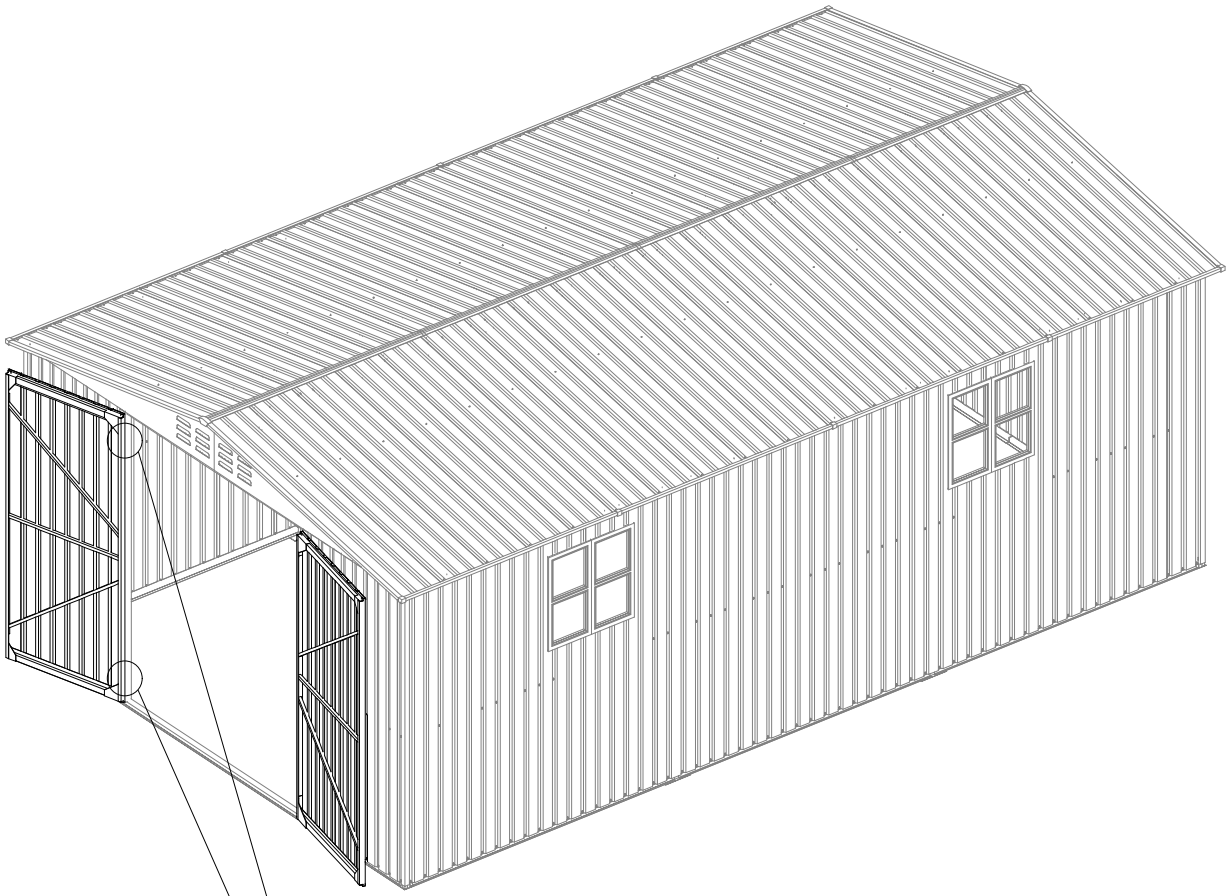
STEP 66

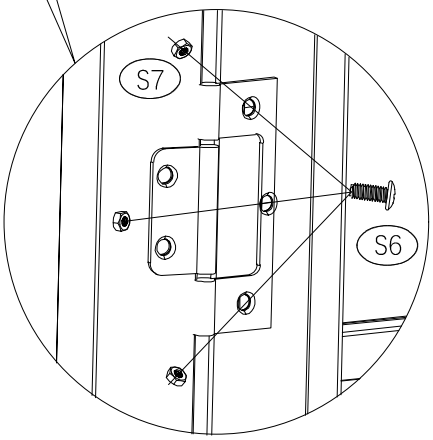




S6		12
S7		12

STEP 67





STEP 68

Y1L		1
Y1R		1

