**W39014**

**OPERATIONS MANUAL**

# WALL LAMP

MADE IN CHINA

# Assembly & Installation Instructions

Dear Customer :
Thank you for choosing us !
We appreciate your business. Should you have **any questions** or encounter **any issues**, please don't hesitate to contact us. You can reach us via email at **support@4modernhome.**com or by **calling 469-312-6428**. Our team is dedicated to ensuring your complete **satisfaction** with your purchase. We value your feedback, as it helps future customers in making informed decisions. We encourage you to share your experience by leaving a brief product review on the platform where you made the purchase. Additionally, you can scan the **provided code for an installation video** to assist you further. Once again, thank you for choosing us !
Best regards!
**[Support Team]**

**Warning:** If any special control devices are used with this fixture, follow the instructions carefully to assure full compliance with N.E.C.requirements. If there are any questions, contact a qualified electric contractor.

**Warning:** California Residents Proposition 65 This product contains lead, a chemical known to the state of California to cause cancer and birth defects or other reproductive harm. Do not place the product in your mouth. Wash your hands after handling this product.

**Caution:** It is highly recommended to get an electrician to install this light. Please make sure to turn the electricity off at the main circuit breaker before beginning installation. All glass is fragile.Use care when handling glass component(s)and/or lamp(s).

## Assembly and Installation Steps

**Step1**

**1A. Loosen mounting screws (E) to remove mounting plate (A) from fixture body (D).Attach mounting plate (A) to junction box (Not included) using outlet box screws (B) .**

**1B. Tie the ground wire from outlet box and from fixture to the ground screw on the mounting plate. Connect the white wire to white and black to black. Cover the connections using the wire connectors provided.**

**1C. Placing fixture body (D) to mounting plate (A) and tighten fixture body (D) using 3 mounting screws (E). Fasten the fixture until held firmly against the wall.**

**Step2**

**Screw glass shade (F) over the socket in the fixture body (D) by using socket ring (G). Do not over tighten.**

**Step3**

**Install 3 E26 bulbs (Not included)**

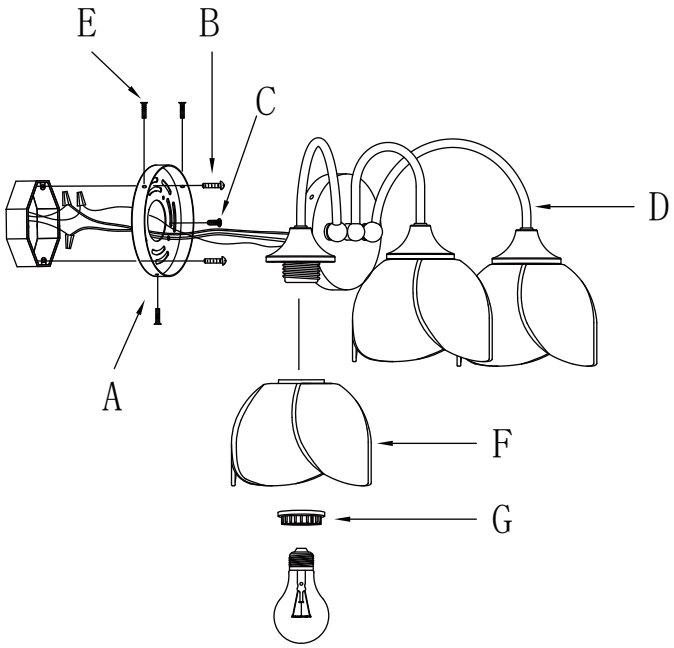


## WIRE CONNECTION DIAGRAM

Wires meeting safety standards are required to connect the electrical circuit.

CAUTION: Risk of fire

Please read all instructions carefully. Before you proceed to install, make sure that the power supply is turned off and remains off until installation is completed.

## PARTS INCLUDED

| Code | Part Description | QTY |
|---|---|---|
| A | Mounting plate | 1PC |
| B | Outlet box screw | 2PCS |
| C | Ground screw | 1PC |
| D | Fixture body | 1PC |
| E | Mounting screw | 3PCS |
| F | Glass shade | 3PCS |
| G | Socket ring | 3PCS |
| | | |
| | | |
| | | |
| | | |
| | | |
| | | |